THIS DRAWING IS UNPUBLISHED. RELEASED FOR PUBLICATION -,- .
© COPYRIGHT - By - ALL RIGHTS RESERVED.

LOC	DIST
G	14

REVISIONS

P	LTR	DESCRIPTION	DATE	DWN	APVD
	S2	REVISED PER ECO-11-004587	11MAR11	RK	HMR

AMP WIRE RANGE	Listed	LR7189 Certified
16-14 AWG SOLID OR STRANDED	16-14 AWG SOLID OR STRANDED	16-14 AWG SOLID OR STRANDED

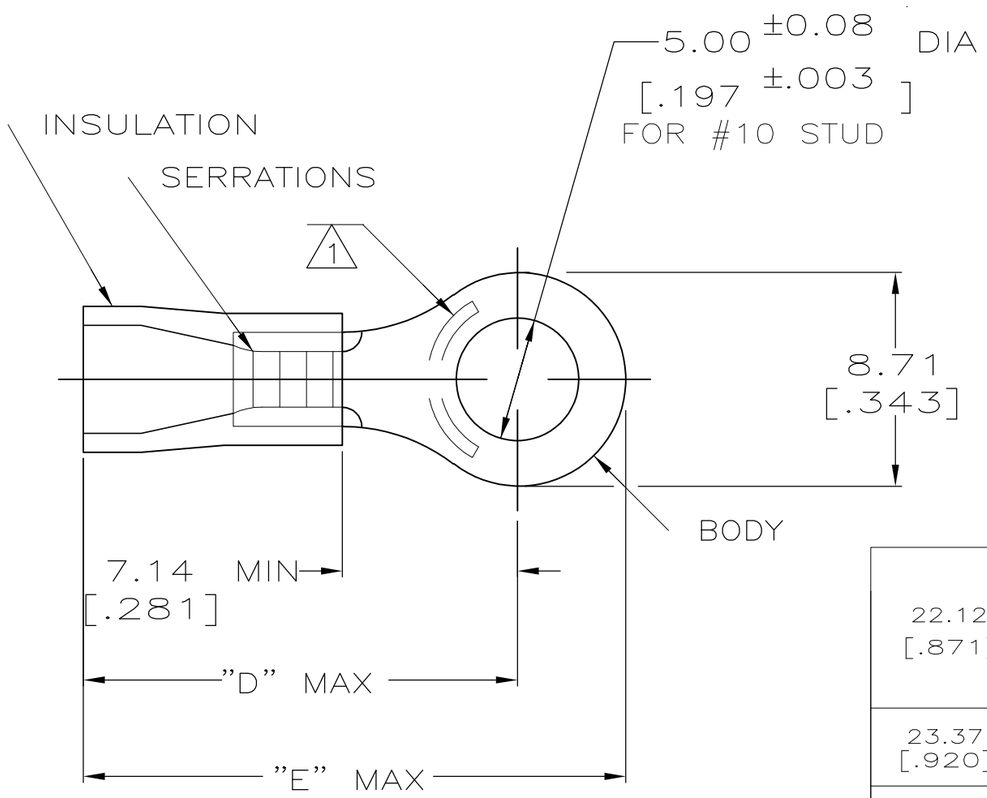

1. STAMP AMP 16-14* APPROX AS SHOWN
2. TONGUE MATERIAL THK: $0.79^{\pm 0.05}$ [$.031^{\pm .002}$]
3. MATERIAL: BODY - CU PER ASTM B152
   SLEEVE - PVC, COLOR - BLUE

"E"	"D"	WIRE INSULATION DIA	QTY	PACKAGE TYPE	PART NUMBER
22.12 [.871]	17.70 [.697]	3.00-4.90 [.118-.193]	50	LOOSE PC, BAG	8-34161-5
			5	LOOSE PC, BLS	8-34161-4
			100	LOOSE PC, BOX	8-34161-1
23.37 [.920]	18.95 [.746]	3.81-6.35 [.150-.250]	5000	ON TAPE, REEL	2-34161-3
			1000	LOOSE PIECE	2-34161-2
22.12 [.871]	17.70 [.697]	3.00-4.90 [.118-.193]	5000	ON TAPE, REEL	2-34161-1
			1000	LOOSE PIECE	34161

AMP INCORPORATED
CUSTOMER SERVICE SYSTEMS

FOR ADDITIONAL PRODUCT INFORMATION OR COPIES OF DRAWINGS AND TECHNICAL DOCUMENTS	PRODUCT INFORMATION CENTER 1-800-522-6752
FOR APPLICATION TOOLING INFORMATION	TOOLING ASSISTANCE CENTER 1-800-722-1111
FOR ORDER ENTRY	1-800-526-5142

THIS DRAWING IS A CONTROLLED DOCUMENT FOR AMP INCORPORATED. IT IS SUBJECT TO CHANGE AND THE CONTROLLING ENGINEERING ORGANIZATION SHOULD BE CONTACTED FOR THE LATEST REVISION.

MAX RECOMMENDED OPERATING TEMPERATURE: 105°C [221° F]

VOLTAGE RATING: N/A

CIRCULAR MIL AREA: 1.04-2.62mm² [2,050-5,180] SOLID OR STRANDED

THIS DRAWING IS A CONTROLLED DOCUMENT.

DIMENSIONS: MM [INCHES]

TOLERANCES UNLESS OTHERWISE SPECIFIED:
0 PLC ± -
1 PLC ± -
2 PLC ± 0.20[.008]
3 PLC ± -
4 PLC ± -
ANGLES ± -

MATERIAL - 3

FINISH TIN PER ASTM B545

DWN	DK SCHRUM	08/06/92
CHK	RE HERSEY	11/10/92
APVD	M ELLIS	11/10/92
PRODUCT SPEC	UL 486A	
APPLICATION SPEC	NOT AVAILABLE	
WEIGHT	-	

TE Connectivity

NAME: TERMINAL, RING TONGUE, PLASTI-GRIP, WIRE SIZE, 16-14 AWG

SIZE	CAGE CODE	DRAWING NO	RESTRICTED TO
A3	00779	C-34161	-

CUSTOMER DRAWING | SCALE 4:1 | SHEET 1 OF 1 | REV S2

1470-19 (3/11)