REVISIONS				
SYM	ZONE	ECN, ERN NO.	DATE	APPRD.
A		PRODUCT DRAWING	99/09/23	K.L.

THIS IS A CAD DRAWING. DO NOT MANUALLY REVISE!

ORDERING CODE: F C C 1 7 - E 0 9 P B - 4 4 0 G

SERIES

SIZE/NUMBER OF CONTACTS
E09, A15, B25, OR C37

CONNECTOR STYLE
P=PIN
S=SOCKET

TERMINATION TYPE
B=.405"[10.29] FOOTPRINT

MOUNTING
2=.120[3.05] DIA THROUGH HOLE
3=#4-40 UNC SELF-LOCKING THREAD
4=#4-40 UNC THREAD
6=M3 x 0.5 THREAD
E=CODE 4 MOUNTING WITH #4-40 UNC HEX JACK SOCKET SUPPLIED.

FILTER CAPACITANCE
D=50 pF 5=1000 pF
0=180 pF E=2200 pF
1=470 pF 9=5600 pF
4=820 pF 8=47000 pF
REFER TO AMPHENOL CATALOGUE FOR FILTER PERFORMANCE CHARACTERISTICS

MODIFIER
0=STANDARD

CONTACT FINISH/GOLD THICKNESS
NO DIGIT=STANDARD 15 µINCHES [0.38 MICRONS] GOLD
G=50 µINCHES [1.27 MICRONS] GOLD

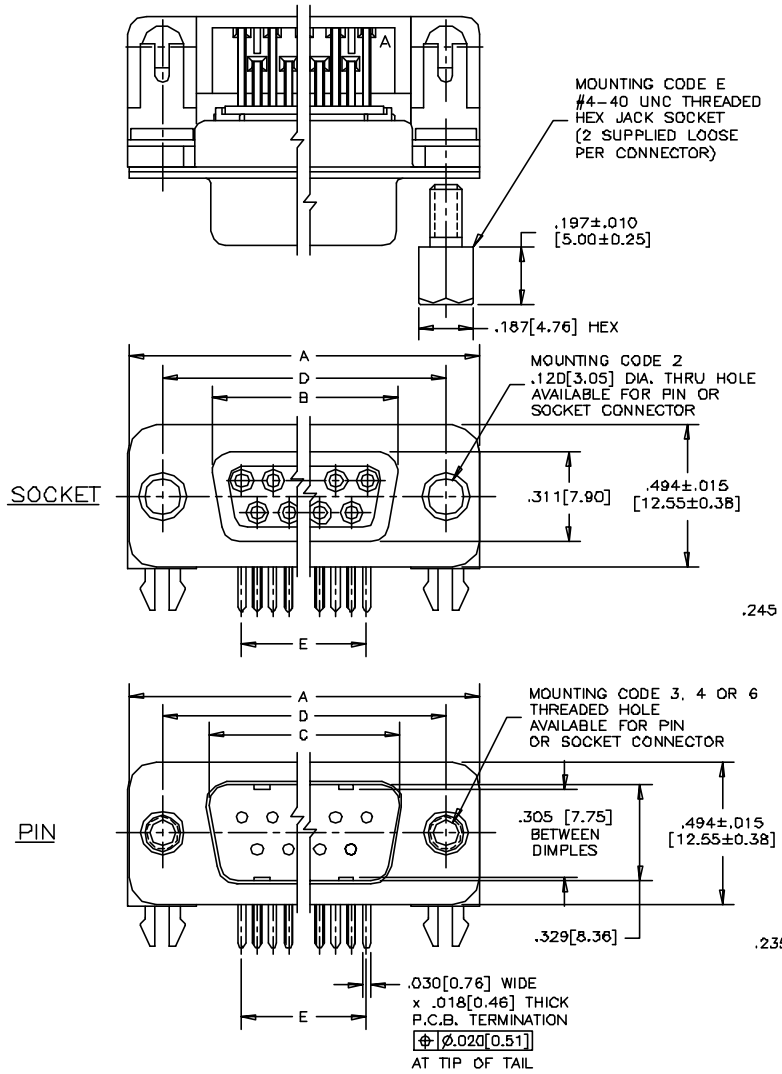

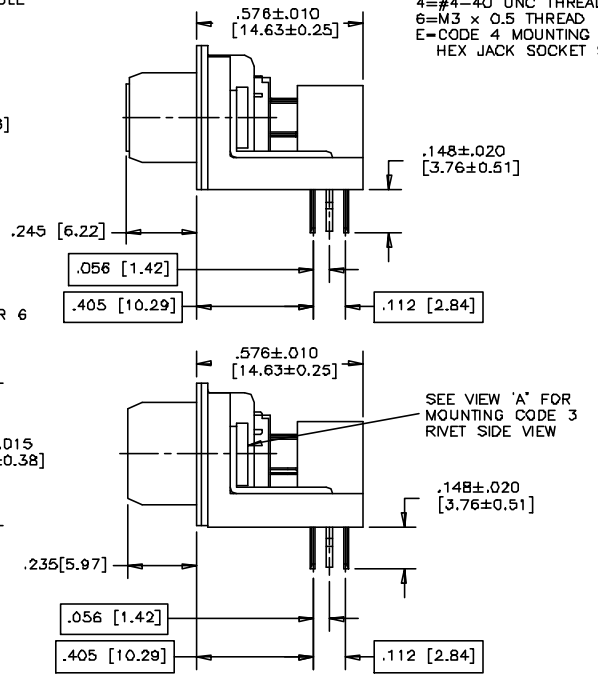

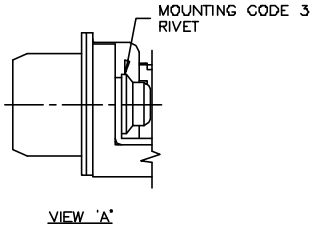

NOTES:

1. MATERIALS: – SHELLS – TIN PLATED STEEL
   – CONTACTS – PHOSPHOR BRONZE PLATED WITH GOLD OVER NICKEL ON THE MATING AREA AND TIN-LEAD ON THE TERMINALS
   – INSULATOR – ENGINEERING THERMOPLASTIC, FLAMMABILITY RATING UL94V-0, BLACK.
2. CONTACT RESISTANCE: 15 MILLIOHMS MAXIMUM.
3. INSULATION RESISTANCE: 3000 MEGOHMS MINIMUM
4. CURRENT RATING: 5 AMPS MAXIMUM
   2 AMPS FILTERING MAXIMUM
5. OPERATING TEMPERATURE: -40°C TO 85°C.
6. TOLERANCE, UNLESS INDICATED OTHERWISE, ±.005 [0.13].

SIZE	STYLE	A±.015 [0.38]	B±.005 [0.13]	C±.005 [0.13]	D±.005 [0.13]	E BSC.
E09	PIN	1.213 [30.81]	-----	.666[16.92]	.984 [24.99]	.432 [10.97]
	SOCKET		.643[16.33]	-----		
A15	PIN	1.541 [39.14]	-----	.994[25.25]	1.312 [33.32]	.756 [19.20]
	SOCKET		.971[24.66]	-----		
B25	PIN	2.088 [53.04]	-----	1.534[38.96]	1.852 [47.04]	1.304 [33.12]
	SOCKET		1.511[38.38]	-----		
C37	PIN	2.729 [69.32]	-----	2.182[55.42]	2.500 [63.50]	1.956 [49.68]
	SOCKET		2.159[54.84]	-----		

THIS DOCUMENT CONTAINS PROPRIETARY INFORMATION AND SUCH INFORMATION MAY NOT BE DISCLOSED TO OTHERS FOR ANY PURPOSE OR USED FOR MANUFACTURING PURPOSES WITHOUT WRITTEN PERMISSION FROM AMPHENOL CANADA CORP.

MATERIAL: -------

FINISH: -------

DRAWN I.ESSAJEE	DATE 98/03/11	
DESIGNED		
CHECKED K.LAMBIE	99/09/23	
I. E. APPRD.		
Q. A. APPRD.		
DWG. APPRD.		
ENG. REL. NO.		
REF. EAR C10858		
DIMENSIONS ARE IN INCHES [mm]	CODE ID. NO. 03554	

Amphenol Canada Corp.

TITLE FCC17 FILTERED D-SUB, RIGHT ANGLE .405"[10.29] F/P, PIN & SOCKET – PLASTIC MTG. BRACKET & BOARDLOCK

DWG DRAWING NO. P-FCC17-XXXXB-XX0X REV. A

SCALE N.T.S. | WT. ------ | SURF. ---- | SHEET 1 OF 1