THIS DRAWING IS UNPUBLISHED. RELEASED FOR PUBLICATION -,- .
© COPYRIGHT - By - ALL RIGHTS RESERVED.

LOC	DIST
H	—

REVISIONS

P	LTR	DESCRIPTION	DATE	DWN	APVD
	M	ECR-16-013255	17JUL2017	FL	SY

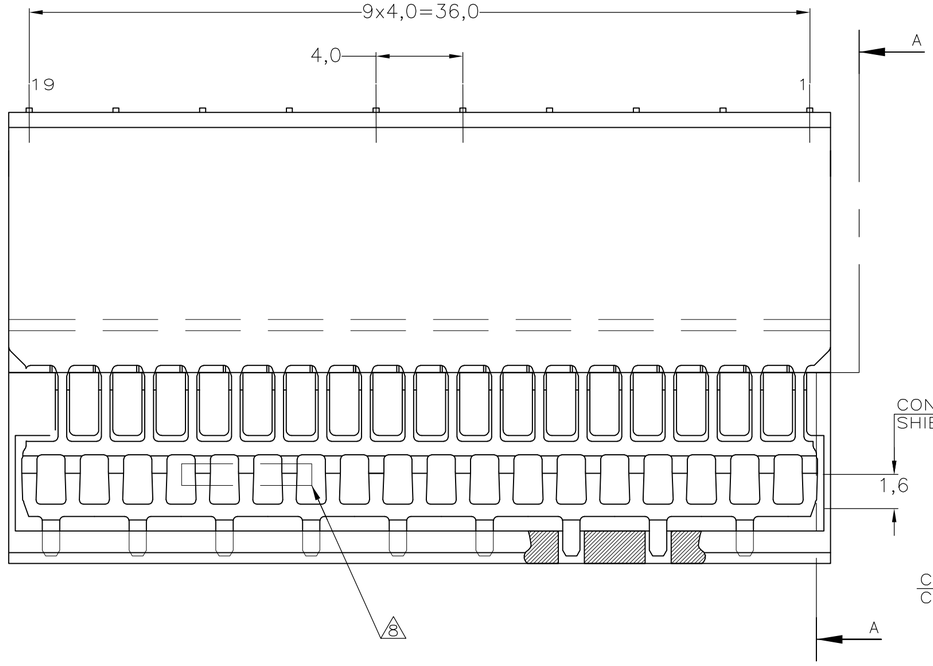

SECTION A–A

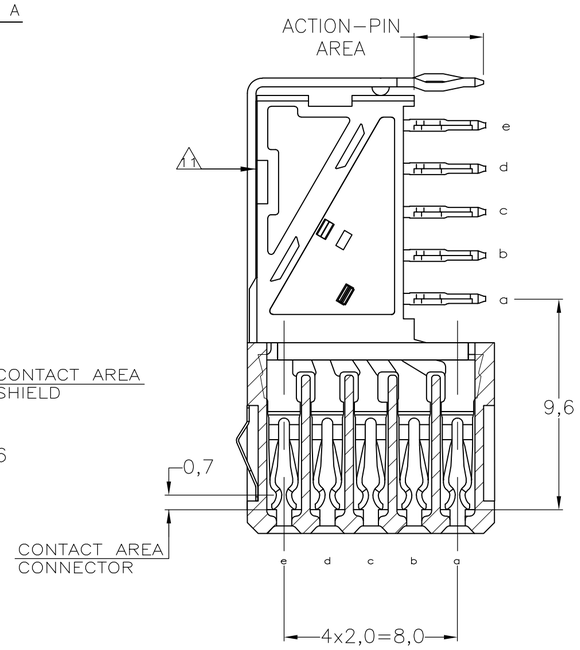

NOTES:

1. MATERIAL CONTACTS; PHOSPHORBRONZE
MATERIAL HOUSING; GLASSFILLED POLYESTER (GRAY)
2. GENERAL PLATING SPECIFICATION: UNDERPLATING (ENTIRE CONTACT): 1,27µm NICKEL MIN. AND ACTION PIN: 0,5µm TIN–LEAD MIN. FOR PLATING OF MATING SURFACES SEE APPLICABLE SPECIFICATION REFERENCE FOR EACH DASH NUMBER.
3. CONFORMS TO ALL TESTING ACCORDING IEC 61076–4–101 PERFORMANCE LEVEL 2.
4. CONFORMS TO ALL TESTING ACCORDING IEC 61076–4–101 PERFORMANCE LEVEL 1.
5. CONNECTOR TESTED AND QUALIFIED AGAINST TELCORDIA GR–1217–CORE QUALITY LEVEL III, CENTRAL OFFICE APPLICATIONS.
6. CONNECTOR LUBRICATED WITH TELCORDIA GR–1217–CORE APPROVED LUBRICANT.
8. ASSEMBLY PRINTED WITH P/N AND DATECODE THE MARKING CAN APPEAR ON THE FRONT SIDE OR BACK SIDE.
9. HOLE PATTERN FOR FEMALE CONNECTOR TYPE B–19 COLUMNS 95 PLATED–THROUGH HOLES AT 2x2mm SQUARE GRID
10. ROW "f" 10 PLATED THROUGH HOLES FOR UPPERSHIELD
11. SHIELD MOUNTED ON CONNECTOR WITH DOUBLE SIDED ADHESIVE TAPE OR ADHESIVE
12. BASIC P.N. LOWERSHIELD: 352029
13. 0.76µm MIN GOLD PLATING AT MATING SURFACES OF SIGNAL.
14. 1.27µm MIN GOLD PLATING AT MATING SURFACES OF SIGNAL.

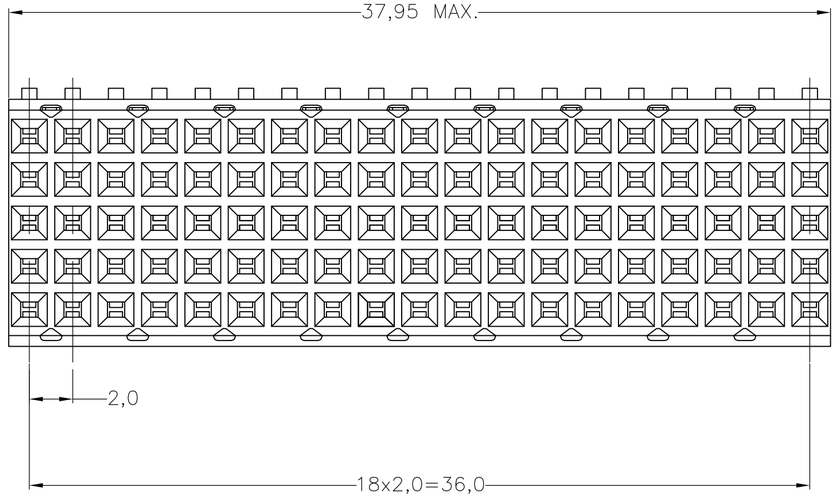

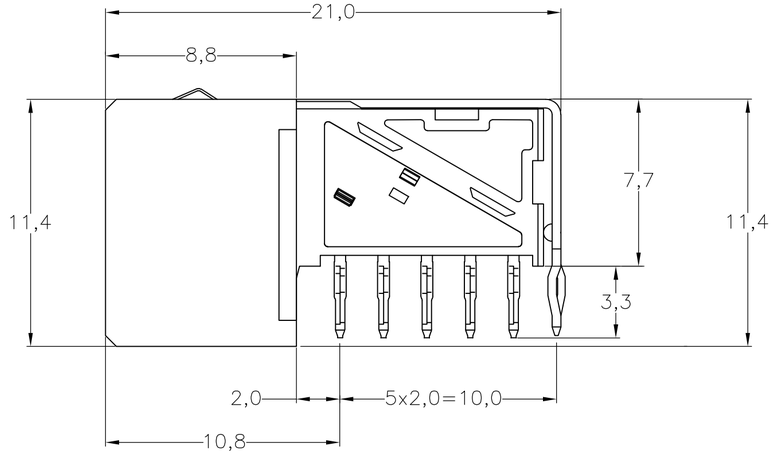

	2 4 14	1	5–352171–0
	2 3 13	1	3–352171–0
	2 5 6	1	352171–9
OBSOLETE	~~2 4~~	~~1~~	~~352171–4~~
	2 3	1	352171–1
	FINISH	MATERIAL	PARTNUMBER

COMPONENT SIDE AS SHOWN
RECOMMENDED PCB–HOLE LAY–OUT
SCALE 2,5:1

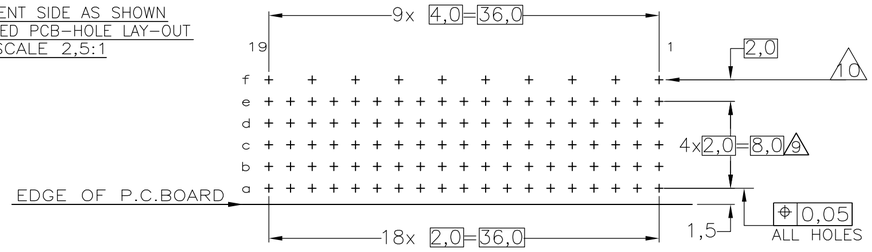

P.C.B. HOLE DIM. ACTION PIN
FOR DETAILS SEE
APPLICATION SPECIFICATION

THIS DRAWING IS A CONTROLLED DOCUMENT.

DIMENSIONS: mm

TOLERANCES UNLESS OTHERWISE SPECIFIED:
0 PLC ± –
1 PLC ± –
2 PLC ± –
3 PLC ± –
4 PLC ± –
ANGLES ± –
±0.2

MATERIAL –
FINISH –

DWN	W. V.D. HEIJDEN	28–JAN–97
CHK	B. MOOIJ	06–FEB–06
APVD	J. BROEKSTEEG	06–FEB–06
PRODUCT SPEC	108–19082	
APPLICATION SPEC	114–19029	
WEIGHT	0.0000	

TE Connectivity

NAME
Z–PACK 2MM HM
TYPE B – 19 COLUMNS
PRE–SHIELDED RECEPTACLE

SIZE	CAGE CODE	DRAWING NO	RESTRICTED TO
A2	00779	C–352171	—

CUSTOMER DRAWING | SCALE NTS | SHEET 1 OF 1 | REV M

352171

1471–9 (3/11)