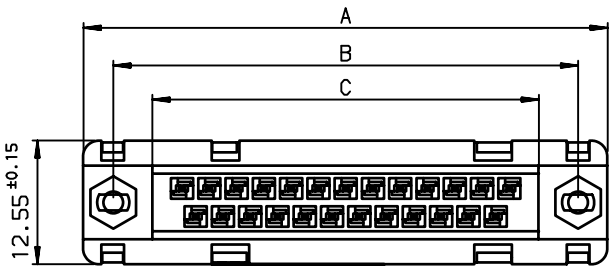

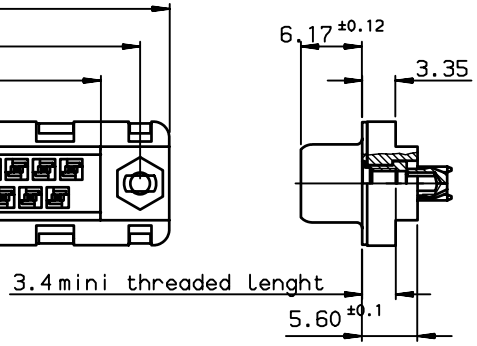

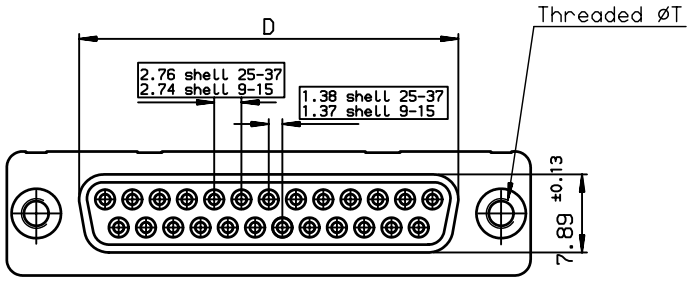

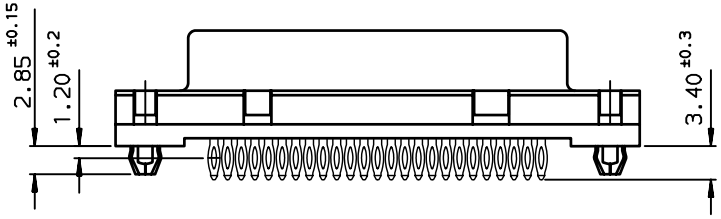

PC board drilling dimensions(after plating)

(thickness ≤ 3.20±0.30mm)

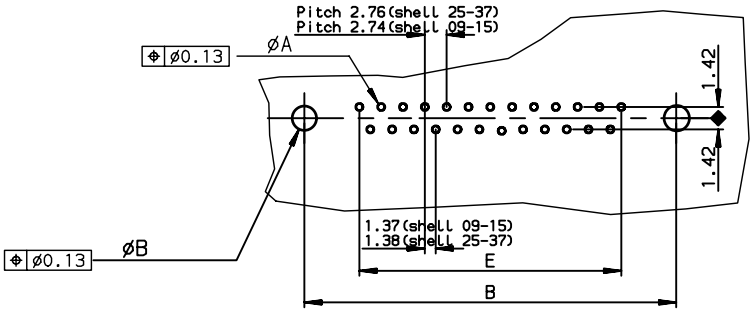

SHELL	A±0.38	B±0.12	C±0.10	D±0.25	E±0.07	TIN LEAD PART NUMBER	TIN LEAD PART NUMBER	TIN LEAD PART NUMBER	LEAD FREE PART NUMBER	LEAD FREE PART NUMBER	LEAD FREE PART NUMBER
09	30.81	24.99	16.96	16.21	10.96	D09S90C4G*00	D09S90C6G*00	D09S90C8G*00	D09S90C4G*00LF	D09S90C6G*00LF	D09S90C8G*00LF
15	39.14	33.32	25.18	24.54	19.18	D15S90C4G*00	D15S90C6G*00	D15S90C8G*00	D15S90C4G*00LF	D15S90C6G*00LF	D15S90C8G*00LF
25	53.03	47.04	39.12	38.25	33.12	D25S90C4G*00	D25S90C6G*00	D25S90C8G*00	D25S90C4G*00LF	D25S90C6G*00LF	D25S90C8G*00LF
37	69.32	63.50	55.68	54.71	49.68	D37S90C4G*00	D37S90C6G*00	D37S90C8G*00	D37S90C4G*00LF	D37S90C6G*00LF	D37S90C8G*00LF
						gold flash	0.76µ gold	1.27µ gold	gold flash	0.76µ gold	1.25µ gold

Threaded ØT M3 = L
Threaded ØT 4.40 = X

GENERAL CHARACTERISTICS AND ROHS INFORMATIONS:
SEE DRAWING C01-8646-0001

European Views

rev	ecn no	dr	date
E	-	ATC	2000/12/22
F	LS05-004	LMA	2005/01/12
G	LS06-0097	LGO	2006/07/29
H	LS06-0140	LGO	2006/09/22
J	LS08-0226	MPE	2008/12/09
-	-	-	-
-	-	-	-

www.fciconnect.com

surface ISO 1302 | tolerance std ISO 406 ISO 1101 | projection | mm

TOLERANCES UNLESS OTHERWISE SPECIFIED

Dr	JARRY	1994/09/21	ANGULAR	LINEAR	0.X	±0.1
Eng	JARRY	1994/09/21			0.XX	±0.1
Chr	-	-	0.XX° ±2°		0.XXX	±0.1
Appr	LEGARE	1994/09/21	Product family		D-SUB	

size A3 | Scale 2 | ECN LS08-0226 | Spec ref -

title: FEMALE CONNECTOR DELTA LOW
PROFIL STRAIGHT PRESS-FIT

dwg no C01-8646-0310 | Rev. J

catalog no - | CUSTOMER | sheet 1 of 1

REV F - 2006-04-17

PDM: Rev:J
STATUS:Released
Printed: Jan 18, 2011
Copyright FCI.