THIS DRAWING IS UNPUBLISHED. RELEASED FOR PUBLICATION -,- .
© COPYRIGHT – BY TYCO ELECTRONICS CORPORATION. ALL RIGHTS RESERVED.

LOC	DIST
GP	00

REVISIONS

P	LTR	DESCRIPTION	DATE	DWN	APVD
	0	PER EC-0S11-0022-05	20APR2005	JA	JGH

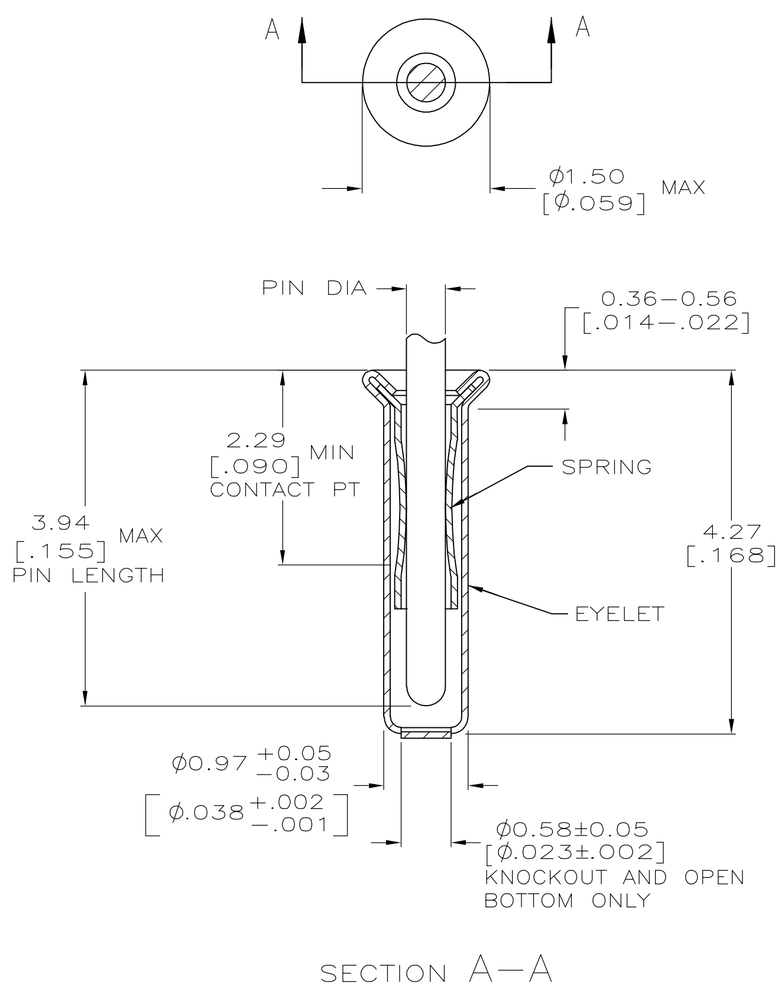

SECTION A–A

1. TIN PLATE PER ASTM B 545 .0.00254 [.000100] MIN THICK.

2. GOLD PLATE PER ASTM B 488, 0.00076 [.000030] MIN THICK OVER NICKEL PLATE PER QQ–N–290 0.00028 [.000011] MIN THICK ON CONTACT AREA.

3. RECOMMENDED HOLE SIZE, PLATED OR UNPLATED:
   MACHINE INSERTION: 1.04±0.05 [.041±.002]
   HAND INSERTION: 1.02 +0.10 –0.00 [.040 +.004 –.000]

4. APPLICATION TOOL PART NUMBER:
   MACHINE NO. 682127–2
   INSERTION HEAD NO. 682039–1

5. TO INSURE PROPER SPRING TENSION DO NOT EXCEED A 0.10 [.004] DIFFERENCE IN PIN DIA WHEN CHANGING TO A SMALLER PIN.

6. BOTTOM PLUG KNOCKOUT TOOL PART NUMBER 69729 WITH TIP PART NUMBER 69728.

CLOSED	0.33–0.51 [.013–.020]	TIN 1	TIN 1	5050935–2
			GOLD 2	5050935–1
BOTTOM TYPE	RECOMMENDED PIN DIA 5	EYELET	SPRING	PART NO
		FINISH		

THIS DRAWING IS A CONTROLLED DOCUMENT.

DIMENSIONS: mm [INCHES]

TOLERANCES UNLESS OTHERWISE SPECIFIED:
0 PLC ± –
1 PLC ± –
2 PLC ± –
3 PLC ± 0.20 [.008]
4 PLC ± –
ANGLES ± –

MATERIAL: SPRING: BE CU

FINISH: SEE TABLE

DWN J. ALCORTA – 20APR2005 DOCK5
CHK J. HAVENER 20APR2005
APVD J. HAVENER 20APR2005
PRODUCT SPEC 108–14008
APPLICATION SPEC 114–13152
WEIGHT –

tyco Electronics
Tyco Electronics Corporation
Harrisburg, PA 17105–3608

NAME: MINIATURE SPRING SOCKET ASSEMBLY SERIES 1

SIZE	CAGE CODE	DRAWING NO	RESTRICTED TO
A2	00779	C–5050935	–

CUSTOMER DRAWING | SCALE 20:1 | SHEET 1 OF 1 | REV 0

5050935