PART NAME	NON-METALLIC ENCLOSURE (STYLE E)	PART No.	NBE-10547 AND NBE-10567

MATERIAL:

SOLID BODY & COVER ____ ABS/PC BLENDED PLASTIC
UL94-5VB FLAMMABILITY RATING

CLEAR COVER ____ POLYCARBONATE PLASTIC
UL94V-0 FLAMMABILITY RATING
UV STABILIZED

PANEL ____ 0.078 THICK ALUMINUM
LATCHES & HINGES ____ NON-METALLIC
WALL MOUNTING BRACKETS ____ STAINLESS STEEL

FINISH:

BODY ____ LIGHT GRAY
COVER ____ LIGHT GRAY OR CLEAR
PANEL ____ ANODIZED

COVER INCLUDES GRAY POLY-URETHANE GASKET.

UNIT COMES COMPLETE WITH (4) WALL MOUNTING BRKTS. & (4) M5 x 10mm LG. TRUSS HD. MACHINE SCREWS (NOT SHOWN)

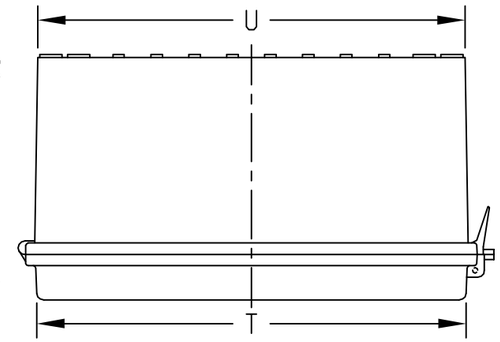

INDUSTRY STANDARDS:

UL508 TYPE 1, 2, 4, 4X INDOOR, 12 & 13
NEMA TYPE 1, 2, 4, 4X, 12 & 13
IEC529-IP65

AIR AND MOISTURE VENTS, GALVANIZED STEEL INTERNAL PANEL AND STAINLESS STEEL LOCKING HASP ARE NOT INCLUDED, BUT CAN BE PURCHASED SEPARATELY.

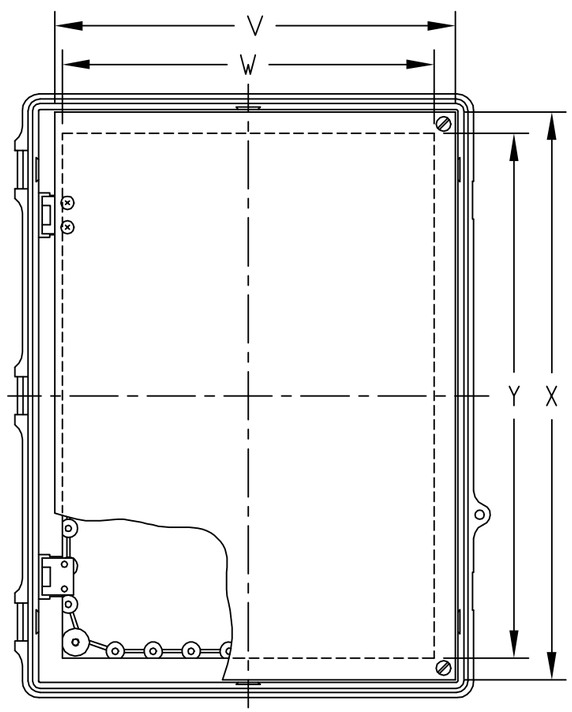

VIEW LESS COVER

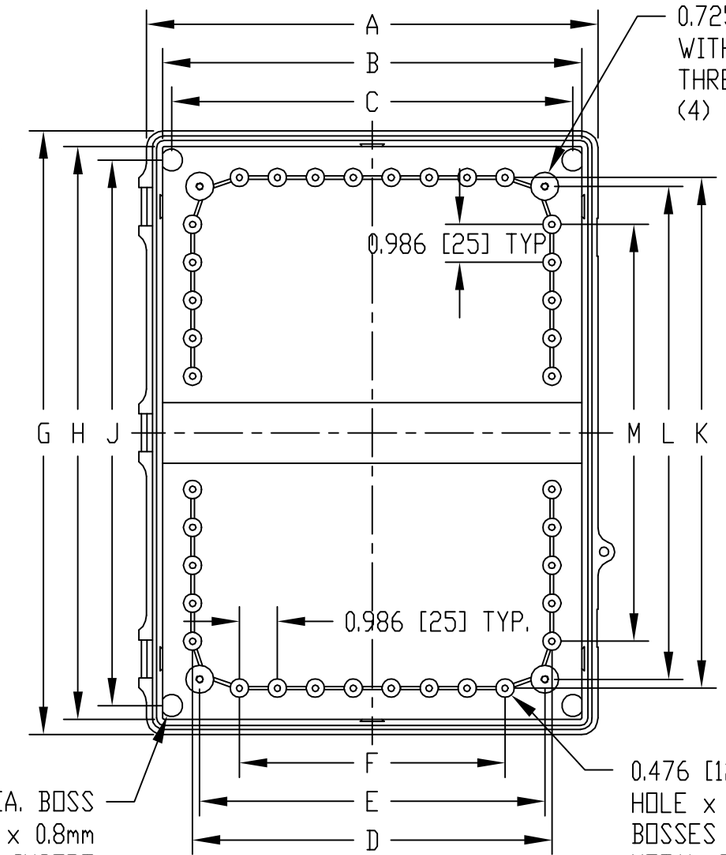

VIEW LESS COVER
AND SWINGFRAME PANEL

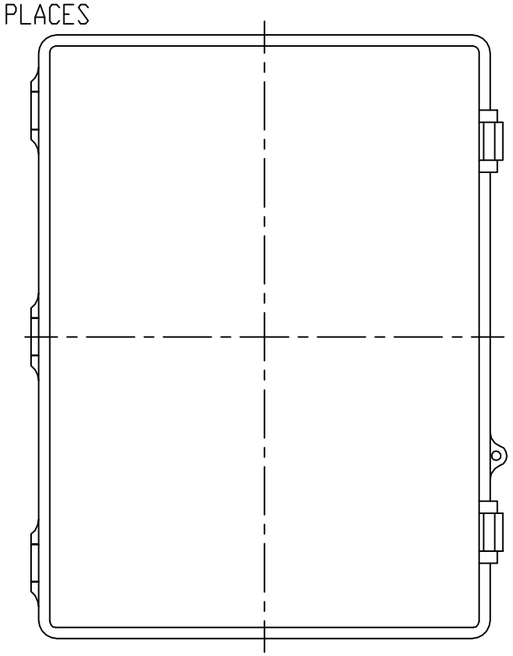

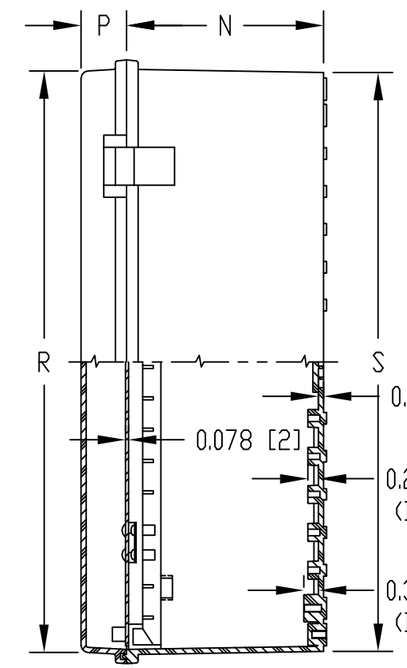

DIMENSIONS = INCHES [MILLIMETERS]

NOTE: ALL DIMENSIONS HAVE ±0.039 [±1] TOLERANCE UNLESS OTHERWISE SPECIFIED

PART NO.		DIMENSIONS																					
SOLID COVER	CLEAR COVER	A	B	C	D	E	F	G	H	J	K	L	M	N	P	R	S	T	U	V	W	X	Y
NBE-10547	NBE-10567	11.727	10.894	10.424	9.335	8.969	6.902	15.680	14.877	14.167	13.265	12.801	10.828	5.110	1.185	15.105	15.035	11.147	11.090	10.400	9.659	14.740	13.635
		[298]	[277]	[265]	[237]	[228]	[175]	[398]	[378]	[360]	[337]	[325]	[275]	[130]	[30]	[384]	[382]	[283]	[282]	[264]	[245]	[374]	[346]

Revised 26JUN07