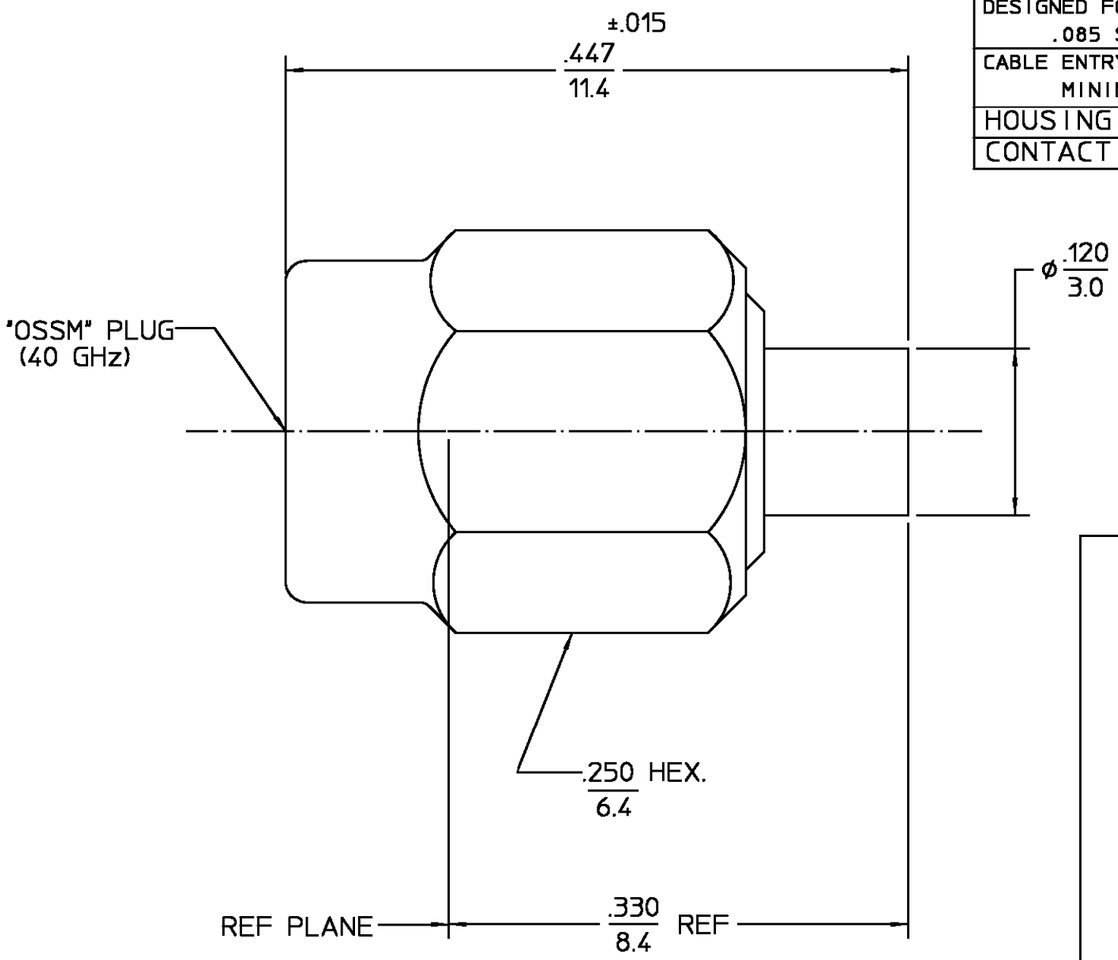

DESIGNED FOR USE WITH .085 S.R.	
CABLE ENTRY DIAMETER MINIMUM	
HOUSING	.088
CONTACT	.024

REVISIONS

REV	DESCRIPTION	DATE	APPROVED
01_1	REVISED	8/8/96	

COMPONENT	MATERIAL	FINISH
COUPLING NUT	STAINLESS STEEL PER ASTM-A484 AND ASTM-A582, TYPE 303	PASSIVATED PER QQ-P-35
HOUSING	STAINLESS STEEL PER ASTM-A484 AND ASTM-A582, TYPE 303	GOLD PLATE PER MIL-G-45204
DIELECTRIC	TFE FLUOROCARBON PER ASTM-D-1457	N/A
CENTER CONTACT	BERYLLIUM COPPER PER ASTM-B-196 OR ASTM-B-197, ALLOY C17300, CONDITION H	GOLD PLATE PER MIL-G-45204
RETAINING RING	BERYLLIUM COPPER PER ASTM-B-194, ALLOY C17200, CONDITION H	N/A
GASKET	SILICONE RUBBER PER ZZ-R-765	N/A

UNLESS OTHERWISE SPECIFIED DIMENSIONS ARE IN INCHES

FRAC.	DEC.	ANGLES
± 1/64	±.005	± 1°

DRAWN BY	SB	DATE 3/24/81
CHECKED BY	KD	3/26/81
APP'D BY	TS	3/27/81

AMP Incorporated
140 Fourth Avenue
Waltham, MA 02451-7599

These drawings and specifications are the property of M/A COM Interconnect Div. and shall not be reproduced or copied or used in whole or in part as the basis for the manufacture or sale o f item(s) without written permission.

USE ASS'Y PROCEDURE

NO. A.P. 408-04776 (14-001)

TITLE "OSSM" STRAIGHT CABLE PLUG - DIRECT SOLDER ATTACHMENT (40 GHz)

SIZE	CODE IDENT NO.		REV
B	26805	1401-7985-02	01_1
SCALE 10:1			SHEET 1 OF 1

.XXX = in
XX.X = mm (REF)

CUSTOMER DRAWING

AMP PART # 1046478-1
SHEET 1 OF 1 REV A