THIS DRAWING IS UNPUBLISHED. RELEASED FOR PUBLICATION AUG ,2005.
© COPYRIGHT 2005 By – ALL RIGHTS RESERVED.

LOC	DIST
J	–

REVISIONS 変更

P	LTR	DESCRIPTION	DATE	DWN	APVD
	R	REVISED PER ECO-15-002720	02MAR2015	AP	SB

1. MATERIAL AND FINISH
   CAP HOUSING
   ; THERMOPLASTIC (UL94V-0) COLOR:BLACK
   POST CONTACT
   ; COPPER ALLOY FINISH,OVER NICKEL
   MATING END:0.0002 MIN. OR
   0.00076 MIN. GOLD
   TERMINATION END:TIN
   OVER SEALING TREATMENT.
2. P.C.B. LAYOUT AND P.C.B. TREATMENT(REF.)
   USE A P.C.B. SURFACE ARE TREATED WITH SOLDER RESIST.
3. KINK POSITIONS(4 POSITIONS).
4. OBSOLETE PARTS: OBSOLETE CIS STREAMLINING PER D.RENAUD/D.SINISI

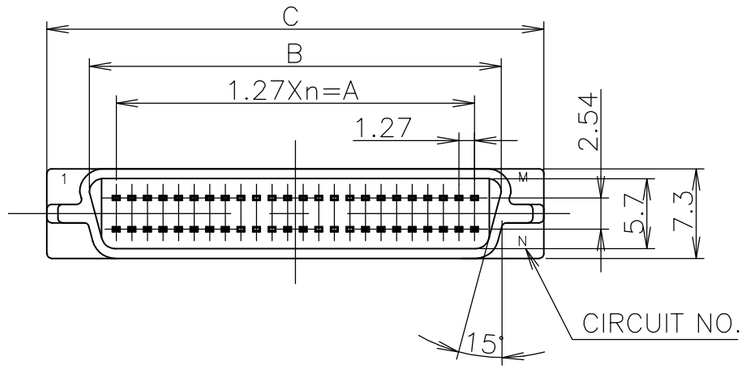

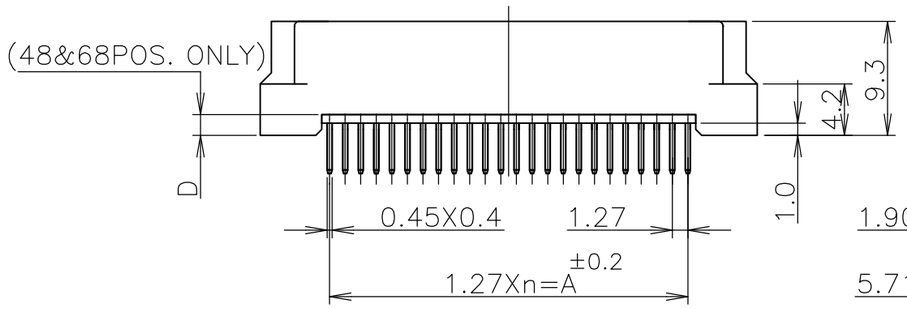

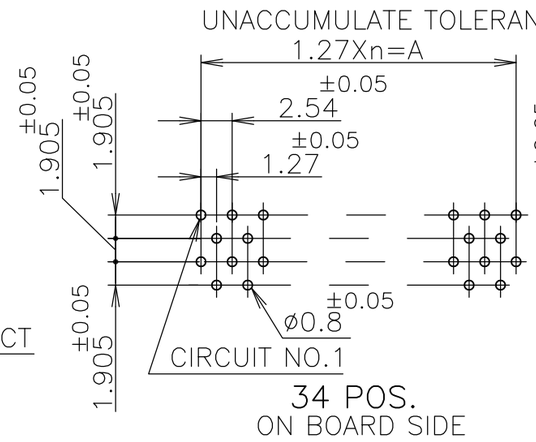

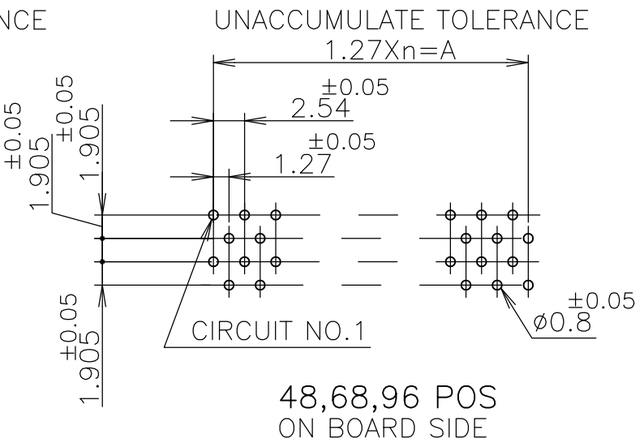

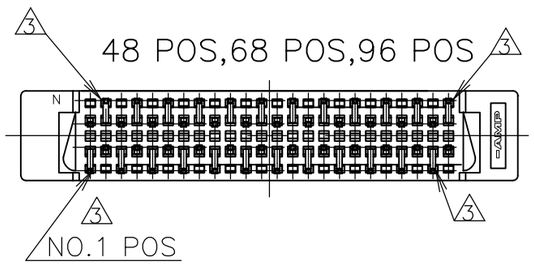

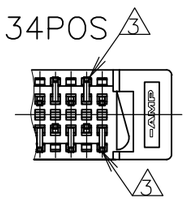

4 OBSOLETE	Au PL. 0.00076 MIN.	96	48	59.69	64.06	71.00	—	47	96	~~6–~~	~~–8~~
		68	34	41.91	46.28	53.22	1.7	33	68	6–	–7
OBSOLETE		48	24	29.21	33.58	40.52	1.7	23	48	~~6–~~	~~–6~~
		34	17	20.32	24.69	31.63	—	16	34	6–	–5
	Au PL. 0.0002 MIN.	96	48	59.69	64.05	71.00	—	47	96		–8
		68	34	41.91	46.28	53.22	1.7	33	68		–7
OBSOLETE		48	24	29.21	33.58	40.52	1.7	23	48		~~–6~~
4 OBSOLETE		34	17	20.32	24.69	31.63	—	16	34		~~5174683–5~~
	REMARK	N	M	A	B	C	D	n	POS.	PART NO.	
		CIRCUIT NO.		DIMENSION							

THIS DRAWING IS A CONTROLLED DOCUMENT.

DIMENSIONS: 単位： 耗 mm

TOLERANCES UNLESS OTHERWISE SPECIFIED: 一般公差
0 PLC ±–
1 PLC ±–
2 PLC ±–
3 PLC ±–
4 PLC ±–
ANGLES ±–

GENERAL TOLERANCE 一般公差
10 ≧ : ±0.2
30≧ > 10: ±0.25
100 ≧ > 30: ±0.3
ANGLES: ±3°

MATERIAL 材料 1
FINISH 仕上 1

DWN	T.KAWAMAE	04AUG05
CHK	T.SASAKI	04AUG05
APVD	T.SASAKI	04AUG05
PRODUCT SPEC 製品規格		
APPLICATION SPEC 取付適用規格		
WEIGHT		

TE Connectivity

NAME 名称: CAP ASSY VERTICAL (W/KINK) AMPLIMITE 050 SERIES I B-TO-B CONN.

SIZE	CAGE CODE	DRAWING NO 番号	RESTRICTED TO
A3	00779	C-5174683	—

CUSTOMER DRAWING | SCALE 尺度 2:1 | SHEET 1 OF 1 | REV R