THIS DRAWING IS UNPUBLISHED. RELEASED FOR PUBLICATION -.- .
© COPYRIGHT - BY TYCO ELECTRONICS CORPORATION. ALL RIGHTS RESERVED.

LOC	DIST
GP	00

REVISIONS

P	LTR	DESCRIPTION	DATE	DWN	APVD
	A	REVISED PER ECO 06-005377	08MAR06	JG	SB

1. HOUSING: FLAME RETARDANT, 94V-0 RATED, GLASS FILLED NYLON OR POLYESTER, COLOR: BLACK.
   CONTACTS: PHOS. BRONZE.
   INSERTS: ZINC.
2. REFER TO APPLICATION SPEC FOR RECOMMENDED P.C. BOARD MOUNTING DIMENSIONS FOR AUTOMATIC INSERTION.
3. CONTACTS: PLATED WITH .000030 MIN GOLD FOR LENGTH OF .055 MIN FROM MATING END, .000100 MIN TIN ON SOLDER END, ALL OVER .000050 MIN NICKEL ON ENTIRE CONTACT.
   INSERTS: CLEAR CHROMATE COATING.

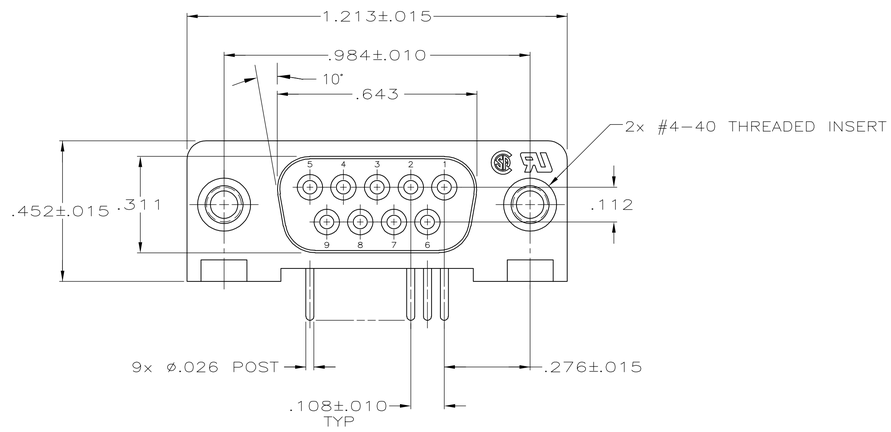

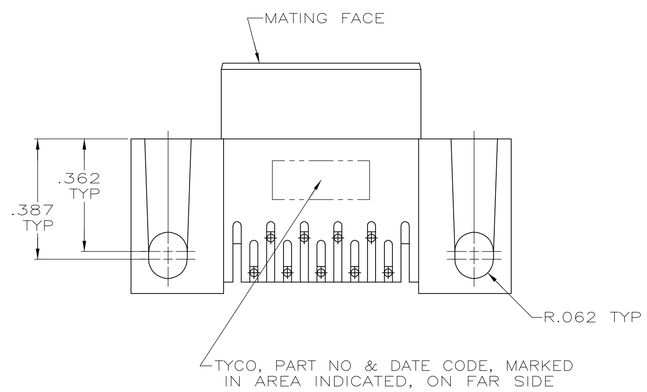

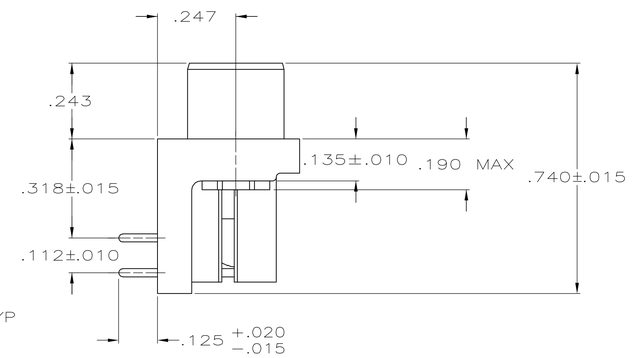

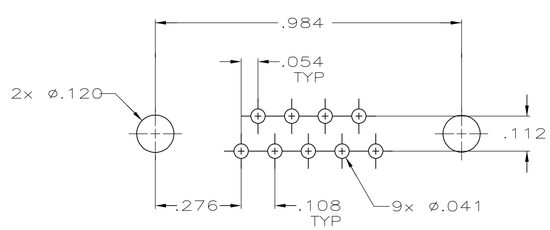

P.C. BOARD MOUNTING DIMENSIONS 2

COPYRIGHT 2005
TYCO ELECTRONICS CORP
ALL RIGHTS RESERVED

THIS DRAWING IS A CONTROLLED DOCUMENT.	DWN G.PETERS 15SEP05	tyco Electronics	Tyco Electronics Corporation Harrisburg, PA 17105-3608
DIMENSIONS: INCHES	CHK S.BOLASH 15SEP05		
TOLERANCES UNLESS OTHERWISE SPECIFIED: 0 PLC ± - 1 PLC ± - 2 PLC ± - 3 PLC ± .005 4 PLC ± - ANGLES ± 2°	APVD M.WALMSLEY 15SEP05	NAME	RECEPTACLE ASSY, SIZE 1, 9 POSN, RIGHT ANGLE, .318 SERIES, .026 DIA POSTS, W/ THREADED INSERTS,
	PRODUCT SPEC 108-40025		
	APPLICATION SPEC 114-40015	SIZE A1	CAGE CODE 00779
MATERIAL 1	WEIGHT -	DRAWING NO C-5745394	RESTRICTED TO -
FINISH 3	CUSTOMER DRAWING	SCALE 4:1	SHEET 1 OF 1 REV A

5745394-2
PART NUMBER