DIALIGHT PART NUMBER	POSITION 1	POSITION 2	MSL
592-2020-002F 592-2020-013F	RED [HI.EFF]	RED [HI.EFF]	2
592-2023-002F 592-2023-013F	RED [HI.EFF]	GREEN	2
592-2121-002F 592-2121-013F	RED [AlGaAs]	RED [AlGaAs]	2
592-2124-002F 592-2124-013F	RED [AlGaAs]	YELLOW	2
592-2222-002F 592-2222-013F	GREEN [HI.INT]	GREEN [HI.INT]	2
592-2320-002F 592-2320-013F	GREEN	RED [HI.EFF]	2
592-2323-002F 592-2323-013F	GREEN	GREEN	2
592-2324-002F 592-2324-013F	GREEN	YELLOW	2
592-2326-002F 592-2326-013F	GREEN	BLUE [InGaN]	2
592-2420-002F 592-2420-013F	YELLOW	RED [HI.EFF]	2
592-2422-002F 592-2422-013F	YELLOW	GREEN [HI.INT]	2
592-2423-002F 592-2423-013F	YELLOW	GREEN	2
592-2424-002F 592-2424-013F	YELLOW	YELLOW	2
592-2525-002F 592-2525-013F	ORANGE	ORANGE	2
592-2626-002F 592-2626-013F	BLUE [InGaN]	BLUE [InGaN]	2
592-2627-002F 592-2627-013F	BLUE [InGaN]	YELLOW [AlInGaP]	2
592-2628-002F 592-2628-013F	BLUE [InGaN]	WHITE	2
592-2631-002F 592-2631-013F	BLUE [InGaN]	YELLOW/GREEN	2
592-2627-002F 592-2627-013F	BLUE [InGaN]	YELLOW [AlInGaP]	2
592-2727-002F 592-2727-013F	YELLOW [AlInGaP]	YELLOW [AlInGaP]	2
592-2826-002F 592-2826-013F	WHITE	BLUE [InGaN]	2
592-2828-002F 592-2828-013F	WHITE	WHITE	2
592-3030-002F 592-3030-013F	RED/GREEN	RED/GREEN	2
592-3126-002F 592-3126-013F	YELLOW/GREEN	BLUE [InGaN]	2
592-3131-002F 592-3131-013F	YELLOW/GREEN	YELLOW/GREEN	2
592-3232-002F 592-3232-013F	RED/YELLOW	RED/YELLOW	2
592-3535-002F 592-3535-013F	RED/GREEN/ BLUE	RED/GREEN/ BLUE	2
592-3031-002F 592-3031-013F	RED/GREEN	YELLOW/GREEN	2

592-XXX-002F PACKAGING SPECIFICATION
SCALE 2.000

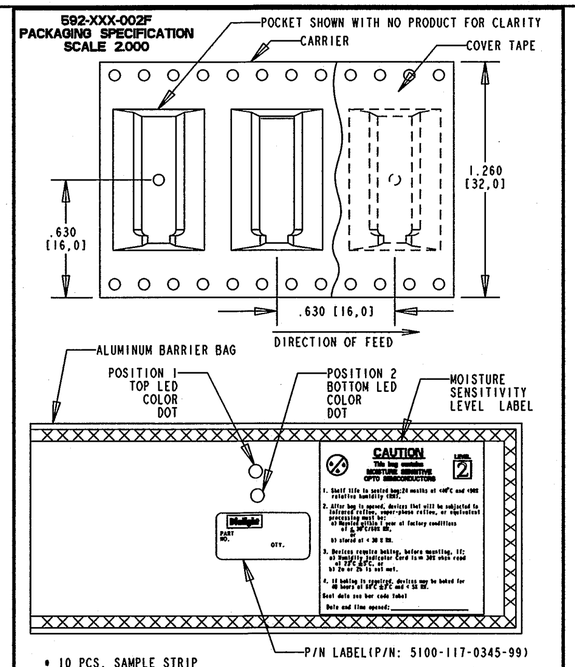

- 10 PCS. SAMPLE STRIP
- STRIP PLACED IN ALUMINUM BARRIER BAG.
- LABEL TO INCLUDE P/N, QTY PER BAG, MFG DATE, LED LOT NO., LED COLOR, LED BIN INTENSITY FOR BOTH LEDS, "U.S. PATENT 7,329,034", AND "COUNTRY OF ORIGIN: MEXICO"

592-XXXX-013F PACKAGING SPECIFICATION

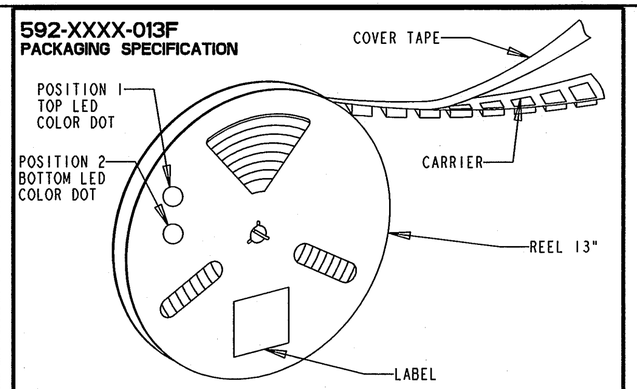

- 13" REEL PER EIA STANDARD 481-2
- QUANTITY = 360 Pcs/REEL IN VACUUM SEALED BAG
- LABEL AND COLOR DOTS ON REEL AND ON BAG
- LABEL TO INCLUDE P/N, QTY PER BAG, MFG DATE LED LOT NO., LED COLOR, LED BIN INTENSITY FOR BOTH LEDS, "U.S. PATENT 7,329,034", AND "COUNTRY OF ORIGIN: MEXICO" CORNER OF LABEL ON REEL INDICATES MOISTURE SENSITIVITY LEVEL. ALUMINUM BARRIER BAG INCLUDES MSL LABEL.

REV.	ECN NO.	REVISIONS	DRN.	CKD.	APP.	DATE
A	——	NEW RELEASE	TWC	NO	MES	2-22-05
B	——	ADDED P-N 592-2627-002F & 592-2627-013F & ESD LOGO	SM	MES	N.O.	4-24-07
C	——	ADDED P/N'S 592-2826-002F,-013F; ADDED U.S. PATENT AND COUNTRY OF ORIGIN INFO TO LABELS IN REEL AND SAMPLE STRIP NOTES; ADDED NOTE 6.	KLJ	N.O.		11-4-08

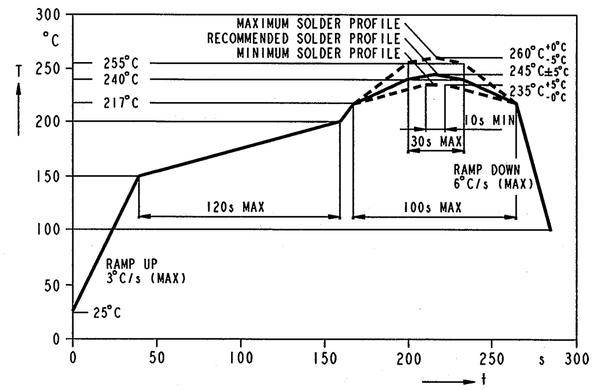

RECOMMENDED RoHS COMPLIANT REFLOW PROFILE

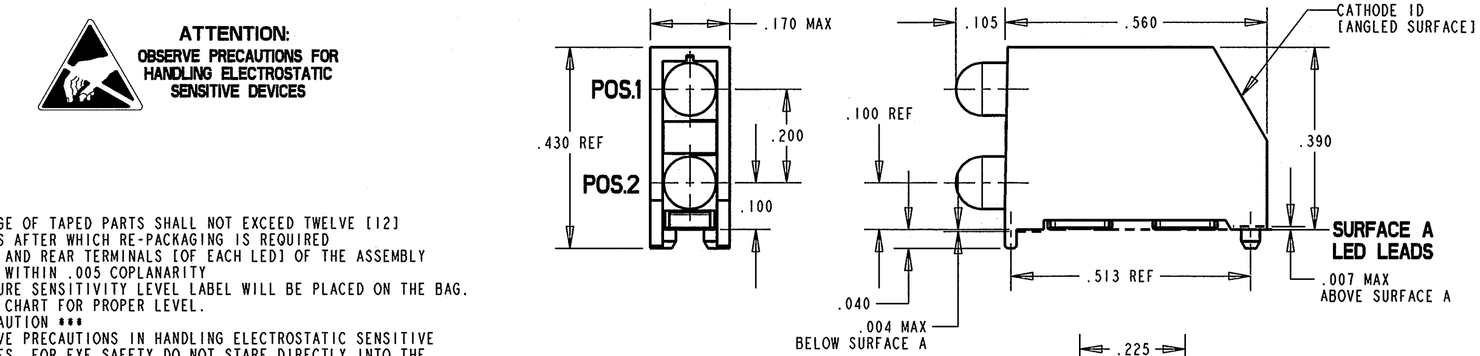

ATTENTION:
OBSERVE PRECAUTIONS FOR HANDLING ELECTROSTATIC SENSITIVE DEVICES

NOTES:

1- STORAGE OF TAPED PARTS SHALL NOT EXCEED TWELVE [12] MONTHS AFTER WHICH RE-PACKAGING IS REQUIRED
2- FRONT AND REAR TERMINALS [OF EACH LED] OF THE ASSEMBLY TO BE WITHIN .005 COPLANARITY
3- MOISTURE SENSITIVITY LEVEL LABEL WILL BE PLACED ON THE BAG. CHECK CHART FOR PROPER LEVEL.
4- *** CAUTION ***
OBSERVE PRECAUTIONS IN HANDLING ELECTROSTATIC SENSITIVE DEVICES. FOR EYE SAFETY DO NOT STARE DIRECTLY INTO THE LIGHT BEAM OF THESE LED DEVICES AT CLOSE RANGE.
5- DIALIGHT PART NUMBERS =
592-XXXX-002F [STRIP]
592-XXXX-013F [13" REEL]
6- PATENT INFORMATION: U.S. PATENT 7,329,034

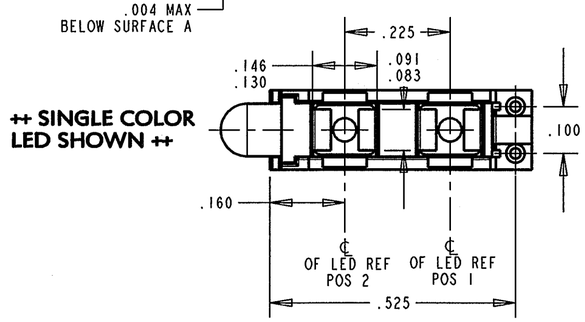

++ SINGLE COLOR LED SHOWN ++

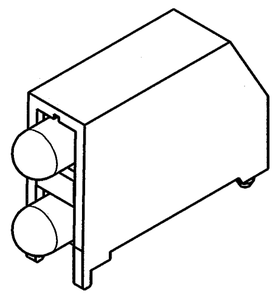

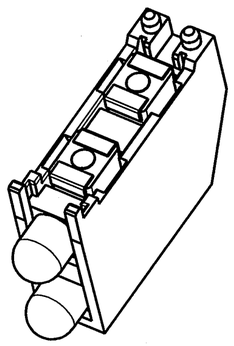

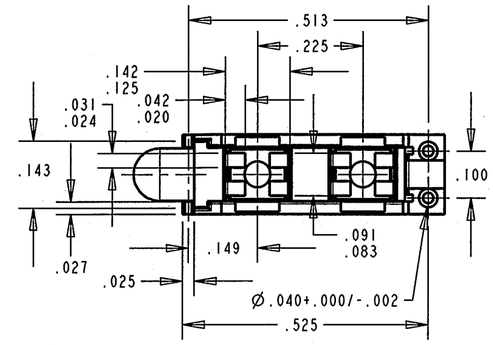

++ BI-COLOR AND TRI-COLOR LED SHOWN ++ WITH TERMINAL DIMENSIONS

RoHS Compliant 592 Bi-level Surface Mount Prism

Part Numbers with the "F" suffix ending are RoHS Compliant. Example: 592-2020-002F, 592-3535-013F The bag and reel are marked with "RoHS Compliant" label or equivalent markings. Parts can be reflow soldered to the Reflow Profile shown using typical lead-free soldering process with max 260°C peak temp.

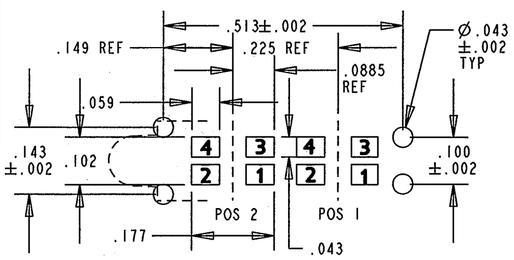

LED COLOR	PIN 1	PIN 2	PIN 3	PIN 4
RED / YELLOW	RED CATHODE	RED ANODE	YELLOW ANODE	YELLOW CATHODE
GREEN / YELLOW	YELLOW CATHODE	YELLOW ANODE	GREEN ANODE	GREEN CATHODE
RED / GREEN	RED CATHODE	RED ANODE	GREEN ANODE	GREEN CATHODE
R/G/B TRI-COLOR	RED CATHODE	COMMON ANODE	GREEN CATHODE	BLUE CATHODE

RECOMMENDED PAD LAYOUT - MULTI-COLOR

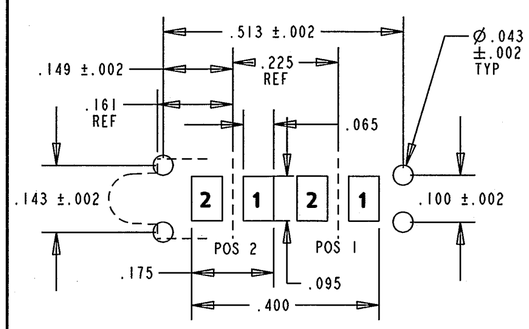

LED COLOR	PIN 1	PIN 2
SINGLE COLOR	CATHODE	ANODE

RECOMMENDED PAD LAYOUT - SINGLE COLOR

THIS DRAWING AND THE CONTENTS HEREIN ARE CONFIDENTIAL AND THE SOLE PROPERTY OF DIALIGHT. REPRODUCTION OF THIS DRAWING OR CONSTRUCTION OF ANY PARTS WITHIN THIS DRAWING ARE FORBIDDEN WITHOUT THE WRITTEN CONSENT OF DIALIGHT.

SCALE: 4.000
ALL DIM'S IN: INCHES (MM)
TOLERANCES: UNLESS OTHERWISE SPECIFIED
FRACTIONS: ±1/64
DECIMALS (.XX): ±.02
DECIMALS (.XXX): ±.015
DECIMALS (.XXXX): ±.0005
ANGLES: ±3°
FINISH:
FSCM 83330

DRAWING NUMBER C-17285
REV C
TITLE BI-LEVEL PRISM RoHS COMPLIANT
MATERIAL

Dialight
1501 ROUTE 34 SOUTH
FARMINGDALE, NJ 07727

SHEET 1 OF 1
FAMILY TABLES: