PRODUCT NUMBER	QUANTITY PER REEL	PACKAGING	REELING
73396-401	12500	CARDBOARD REEL	"A"
73396-401LF	12500	CARDBOARD REEL	"A"
73396-401RLF	12500	CARDBOARD REEL	"R"
73396-403LF	500	SMALL PLASTIC REEL	"P"

WHEN NEEDED, SUFFIX LETTER "LF" INDICATES THE PRODUCT IS RoHS COMPATIBLE, SEE NOTE

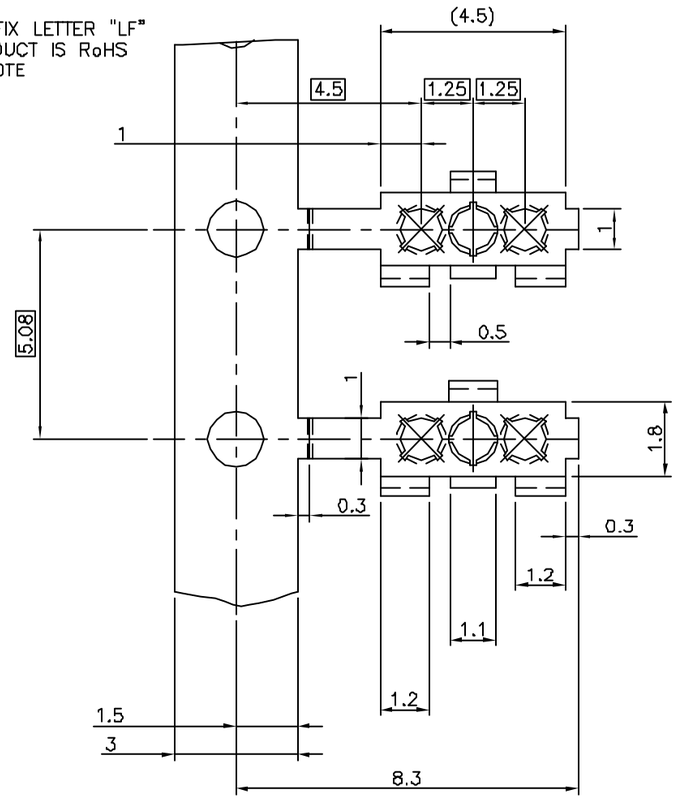

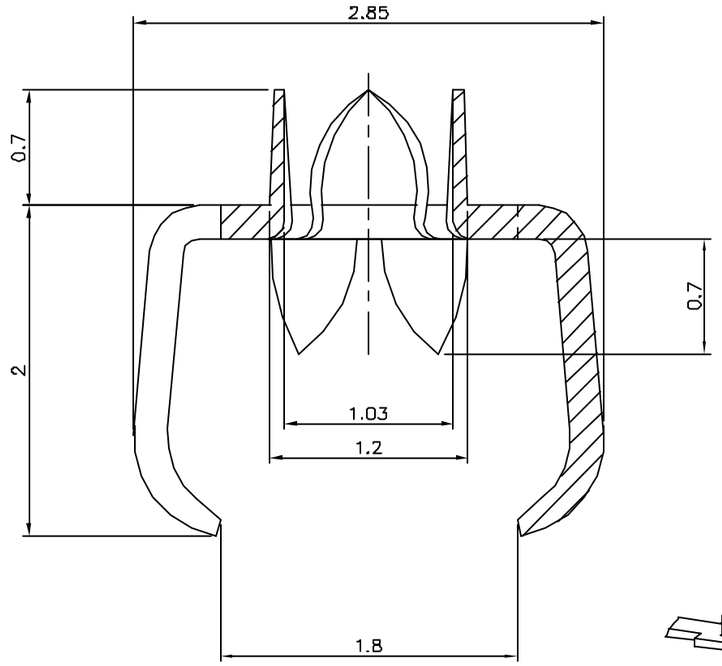

SCALE 40/1

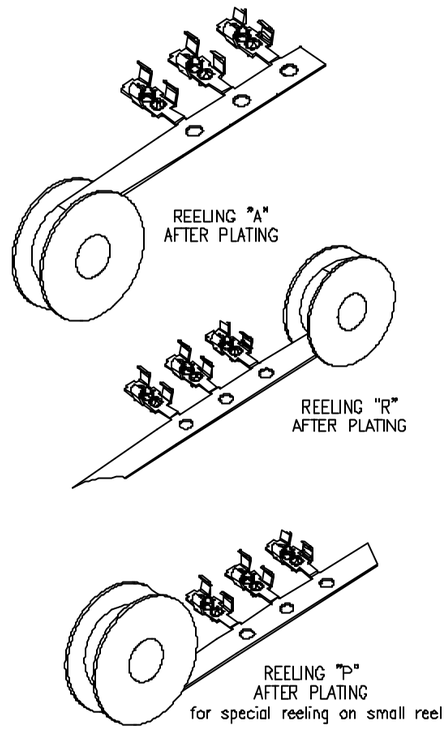

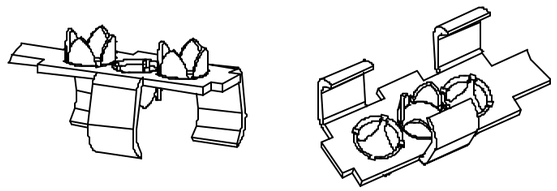

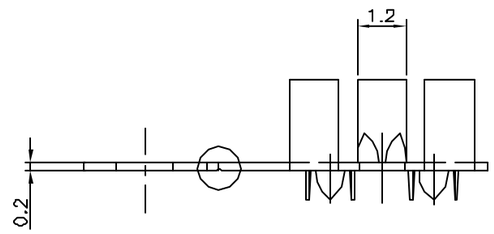

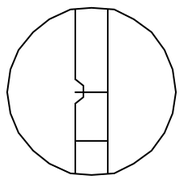

SCALE 40/1

NOTES

-1 MATERIAL : PHOSPHOR BRONZE 3/4 HARD

-2 PRODUCT IS POST PLATED

-3 RoHS COMPATIBLE PRODUCT SPECIFICATIONS

a - PLATING:

- "LF" MEANS THE PRODUCT IS LEAD-FREE, 2µm MINIMUM MATTE TIN OVER 1.27µm MINIMUM NICKEL UNDERPLATE.

b - LABELING:

- MEETS PACKAGING SPECS AS PER GS-14-920

c - LEGAL STATEMENT: SEE GS-22-008

THE PRODUCT IS NOT INTENDED TO BE EXPOSED TO A MANUFACTURING SOLDER PROCESS.

73396-40XLF	1-5µm Sn MIN OVER 1.27µm Ni MIN
73396-40X	1-5µm SnPb MIN OVER 0.1µm Ni MIN
PRODUCT NUMBER	PLATING

ltr	ecn no	dr	date
A	F90184	DLE	99.03.19
B	F10722	JMP	01.12.04
C	F04-0373	DLE	04.11.19
D	F05-0286	DLE	05.11.07
E	F06.0214	DLE	06.06.30
F	F07-0128	DLE	07.02.08
G	F07-0282	PNZ	07.12.03

mat'l. code: SEE NOTES
surface: ISO 1302
tolerance: ISO 406 ISO 1101
tolerances unless otherwise specified: angles ±2°; linear ±0.13
projection: mm
scale 10:1

dr	D LEGRAND	98.06.18
engr	JM PHAMVAN	98.06.18
chr	D LEGRAND	98.06.18
appd	JM. PHAMVAN	98.06.18

sheet / revision
index / sheet

product family: STAR CRIMP
title: STAR CRIMP FOIL-WIRE CLINCHER
dwg no: 73396
sheet 1 of 1
size: A2
type: CUSTOMER Drawing

FCI

form: A2
\\Drdrpublic\Engineering\Product\ELX\F07-0282\73396c01.dwg

FCIconnect.com
Copyright FCI

PDM: Rev:G STATUS:Released Printed: Sep 15, 2009