multicomp	PART NO.	REVISIONS								
		ECN #	REV	DESCRIPTION	DRAWN	DATE	CHECKD	DATE	APPRVD	DATE
	SDCMF-10915W0T1	-	A	RELEASED	NOO	28/5/12	SHA	28/5/12		11/6/12

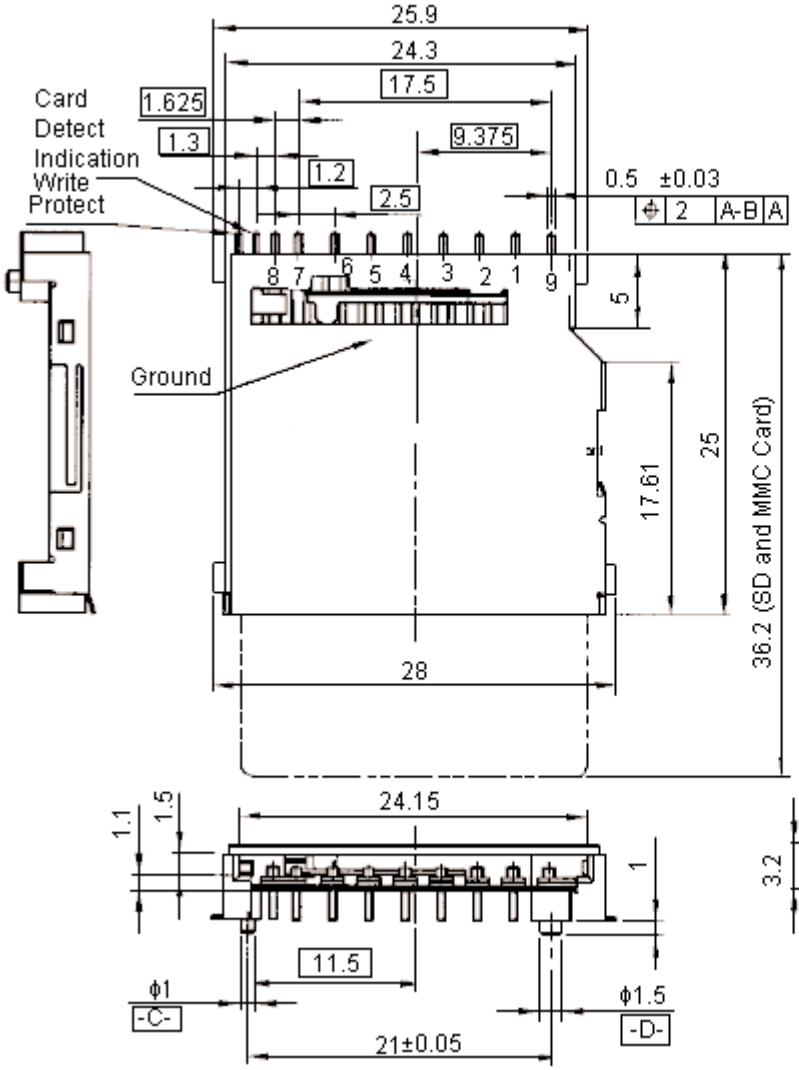

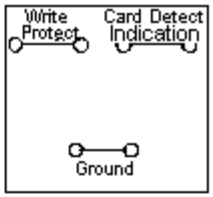

Without Card

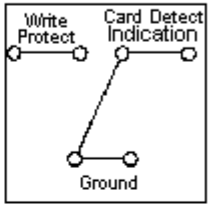

Card Inserted
Write protect : Lock

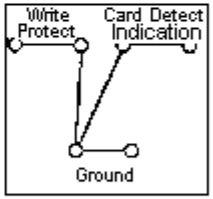

Card Inserted
Write protect : Unlock

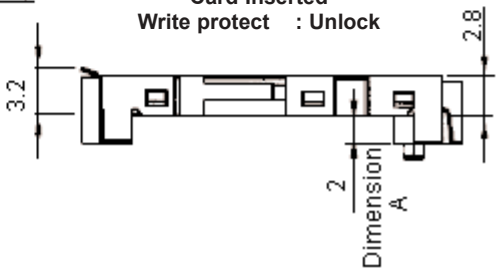

Dimensions : Millimetres

Important Notice : This data sheet and its contents (the "Information") belong to the members of the Premier Farnell group of companies (the "Group") or are licensed to it. No licence is granted for the use of it other than for information purposes in connection with the products to which it relates. No licence of any intellectual property rights is granted. The Information is subject to change without notice and replaces all data sheets previously supplied. The Information supplied is believed to be accurate but the Group assumes no responsibility for its accuracy or completeness, any error in or omission from it or for any use made of it. Users of this data sheet should check for themselves the Information and the suitability of the products for their purpose and not make any assumptions based on information included or omitted. Liability for loss or damage resulting from any reliance on the Information or use of it (including liability resulting from negligence or where the Group was aware of the possibility of such loss or damage arising) is excluded. This will not operate to limit or restrict the Group's liability for death or personal injury resulting from its negligence. Multicomp is the registered trademark of the Group. © Premier Farnell plc 2012.

TOLERANCES:

UNLESS OTHERWISE SPECIFIED, DIMENSIONS ARE FOR REFERENCE PURPOSES ONLY.

DRAWN BY:	DATE:
NOO	28/05/12
CHECKED BY:	DATE:
SHA	28/05/12
APPROVED BY:	DATE:
	11/06/12

DRAWING TITLE:

SD Memory Card Connector Type C

SIZE	DWG NO.	ELECTRONIC FILE	REV
A	M10002118	358992_DWG	A

SCALE: NTS | U.O.M.: mm | SHEET: 1 OF 1

PART NO.	REVISIONS								
SDCMF-10915W0T1	ECN #	REV	DESCRIPTION	DRAWN	DATE	CHECKD	DATE	APPRVD	DATE
	-	A	RELEASED	NOO	28/5/12	SHA	28/5/12		11/6/12

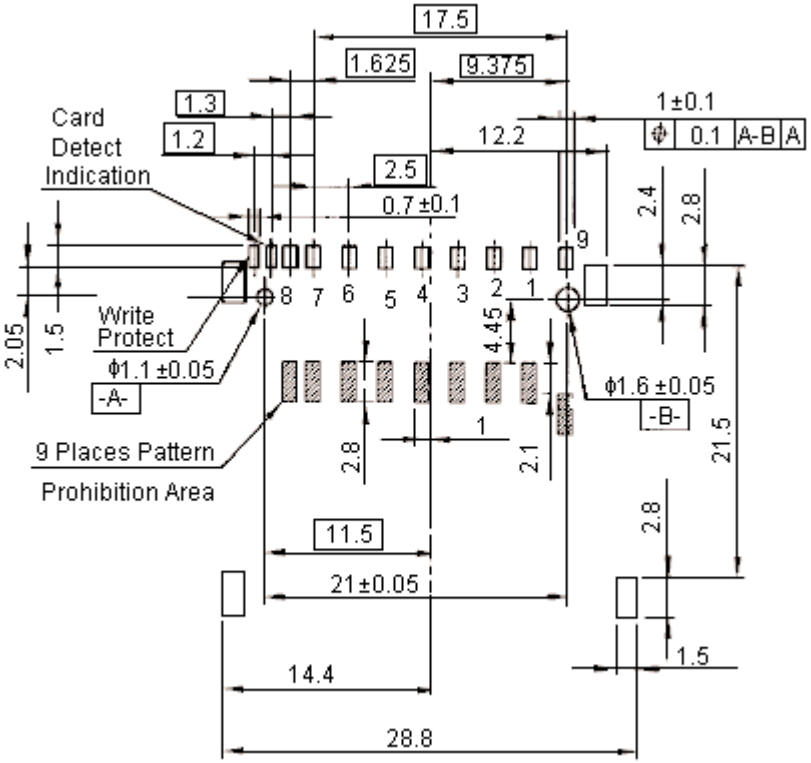

Dimensions : Millimetres

SD Card PIN Assignment

PIN	Name
1	CD / DAT3
2	CMD / D1
3	VSS1
4	VDD
5	CLK / SCLK
6	VSS2
7	DAT0
8	DAT1
9	DAT2

Part Number Table

Description	Part Number
Card, SD, Metal Cover + Standoff	SDCMF-10915W0T1

Part Number Explanation:

SDCMF - 109 15 W0 T 1

Contact Area Plating

Plating Type

Contact Area Plating : 15 = 15 µ Inches Gold Plating
Plating Type : T = Lead Free

www.element14.com
www.farnell.com
www.newark.com

Important Notice : This data sheet and its contents (the "Information") belong to the members of the Premier Farnell group of companies (the "Group") or are licensed to it. No licence is granted for the use of it other than for information purposes in connection with the products to which it relates. No licence of any intellectual property rights is granted. The Information is subject to change without notice and replaces all data sheets previously supplied. The Information supplied is believed to be accurate but the Group assumes no responsibility for its accuracy or completeness, any error in or omission from it or for any use made of it. Users of this data sheet should check for themselves the Information and the suitability of the products for their purpose and not make any assumptions based on information included or omitted. Liability for loss or damage resulting from any reliance on the Information or use of it (including liability resulting from negligence or where the Group was aware of the possibility of such loss or damage arising) is excluded. This will not operate to limit or restrict the Group's liability for death or personal injury resulting from its negligence. Multicomp is the registered trademark of the Group. © Premier Farnell plc 2012.

TOLERANCES:

UNLESS OTHERWISE SPECIFIED, DIMENSIONS ARE FOR REFERENCE PURPOSES ONLY.

DRAWN BY:	DATE:
NOO	28/05/12
CHECKED BY:	DATE:
SHA	28/05/12
APPROVED BY:	DATE:
	11/06/12

DRAWING TITLE:

SD Memory Card Connector Type C

SIZE	DWG NO.	ELECTRONIC FILE	REV
A	M10002118	358992_DWG	A

SCALE: NTS | U.O.M.: mm | SHEET: 2 OF 2