THIS DRAWING IS UNPUBLISHED. RELEASED FOR PUBLICATION ,19 .
© COPYRIGHT 19 BY AMP INCORPORATED. ALL RIGHTS RESERVED.

LOC	DIST
AG	53

REVISIONS

P	LTR	DESCRIPTION	DATE	DWN	APVD
	F2	REVISED PER ECO-06-018765	13APR07	DH	DB

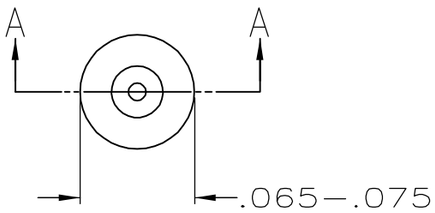

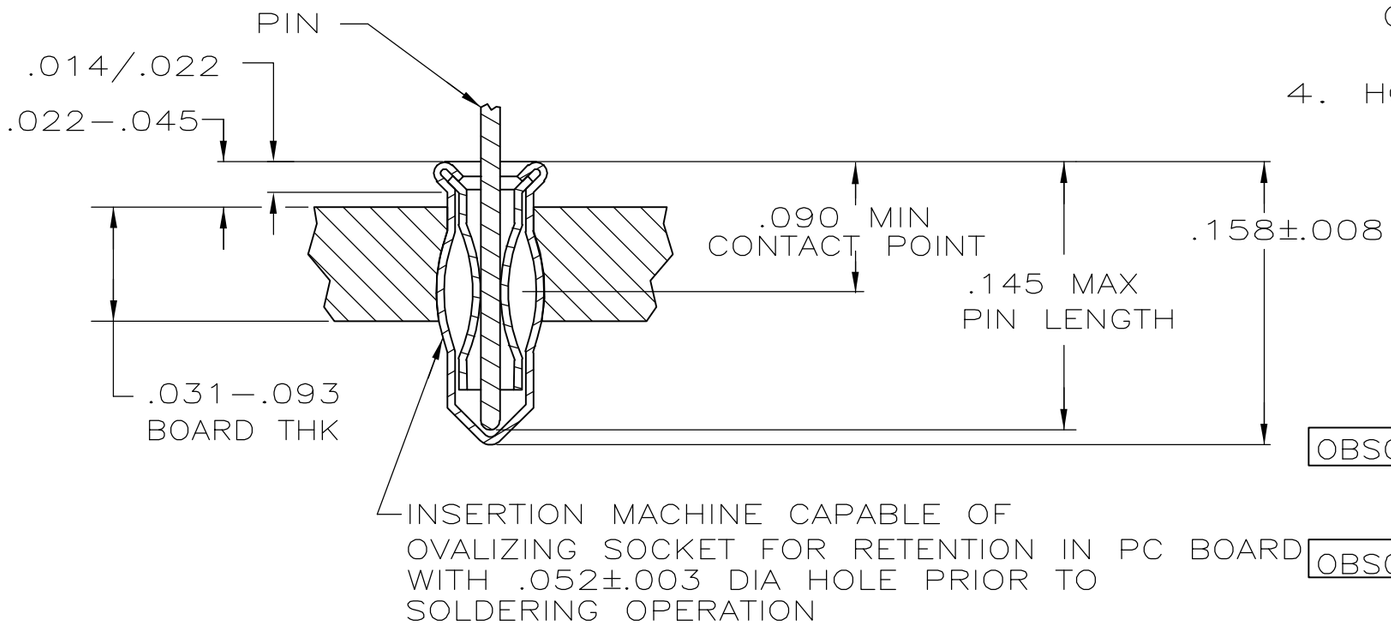

SECTION A–A

1. MATERIAL:
   EYELET – COPPER (QQ–C–576)
   SPRING – BERYLLIUM COPPER (QQ–C–533)

2. PLATING:
   TIN (MIL–T–10727) .000150 MIN THK
   GOLD (MIL–G–45204) .000030 MIN THK OVER NICKEL
   (QQ–N–290) .000011 MIN THK ON CONTACT AREA.

3. TO INSURE 1/2 OZ MIN RETENTION DO NOT
   EXCEED .004 DIFFERENCE IN PIN DIA WHEN
   CHANGING TO A SMALLER DIA PIN

4. HOLE SIZE FOR HAND INSERTION .053–.055

	LENGTH	DIA (3)	SPRING	EYELET	PART NO
OBSOLETE	.090/.145	.014/.022	GOLD	TIN	645951–5
			TIN		645951–4
		.020/.026	GOLD		645951–2
OBSOLETE			TIN		645951–1
	PIN		FINISH		
	NO. 2 SERIES SHORT				

THIS DRAWING IS A CONTROLLED DOCUMENT.

DIMENSIONS: INCHES

TOLERANCES UNLESS OTHERWISE SPECIFIED:
0 PLC ±–
1 PLC ±–
2 PLC ±–
3 PLC ±–
4 PLC ±–
ANGLES ±–

MATERIAL –
FINISH –

DWN M. BOWERS 12–10–82
CHK P. MUTZABAUGH 6–10–85
APVD G.D. MILLER 6–10–85
PRODUCT SPEC –
APPLICATION SPEC –
WEIGHT –

AMP Incorporated
Harrisburg, PA 17105–3608

NAME
MINIATURE SPRING SOCKET ASSEMBLY

SIZE	CAGE CODE	DRAWING NO	RESTRICTED TO
A3	00779	C– 645951	–

CUSTOMER DRAWING
SCALE NTS
SHEET 1 OF 1
REV F2

Translated 070209.135414 (YYMMDD.HHMMSS) from Computervision, Inc., Medusa Revision 12.2.5T