THIS DRAWING IS UNPUBLISHED. RELEASED FOR PUBLICATION -,- .
© COPYRIGHT - By - ALL RIGHTS RESERVED.

LOC	DIST
ES	00

REVISIONS

P	LTR	DESCRIPTION	DATE	DWN	APVD
	B2	ECR-14-006619	12MAY2014	T.Q	W.H

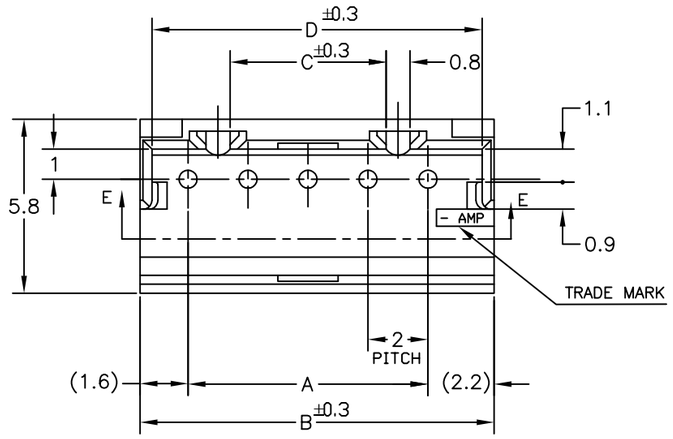

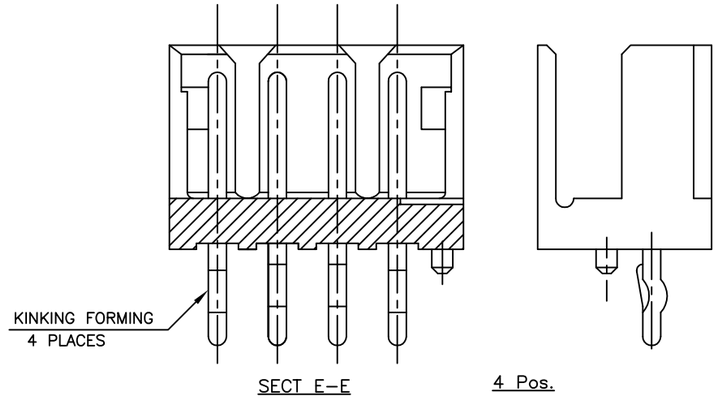

NOTES:
1.MATERIAL: HOUSING - NYLON 66 (UL94V-0)
POST - TIN BRASS

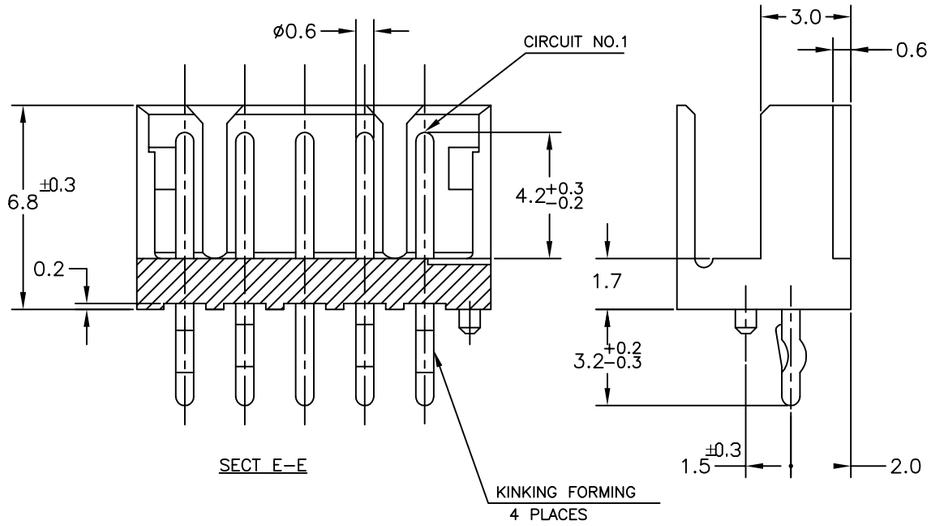

5 Pos.

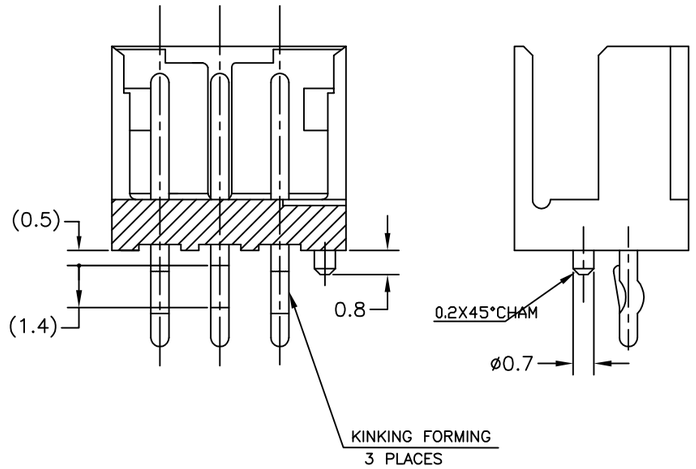

3 Pos.
SECT E-E

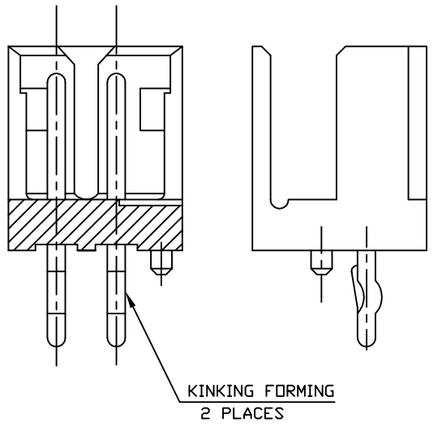

2 Pos.
SECT E-E

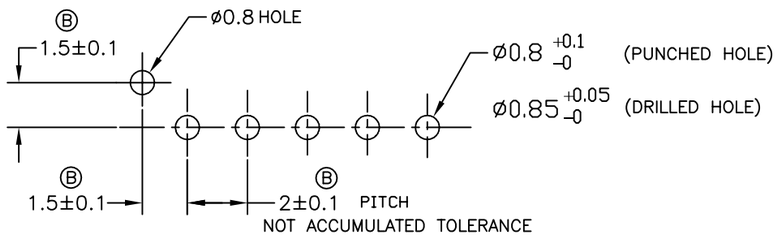

RECOMMENDABLE PCB LAYOUT
(PCB THK: 0.8-1.6)

THIS DRAWING IS A CONTROLLED DOCUMENT.

DIMENSIONS: mm

TOLERANCES UNLESS OTHERWISE SPECIFIED: ±0.2
~~0 PLC ±-~~
~~1 PLC ±-~~
~~2 PLC ±-~~
~~3 PLC ±-~~
~~4 PLC ±-~~
ANGLES ±-

MATERIAL: SEE NOTE
FINISH: SEE NOTE

DWN	S.XU	06NOV03
CHK	S.YAO	06NOV03
APVD	T. SASAKI	06NOV03
PRODUCT SPEC	108-60016	
APPLICATION SPEC	-	
WEIGHT	-	

TE Connectivity

NAME: POST HEADER ASS'Y POLARIZE TYPE (BOX-V TYPE) (AMP CT CONNECTOR 2mm PITCH)

SIZE	CAGE CODE	DRAWING NO	RESTRICTED TO
A3	00779	C-292251	-

CUSTOMER DRAWING | SCALE 5:1 | SHEET 1 OF 2 | REV B2

THIS DRAWING IS UNPUBLISHED. RELEASED FOR PUBLICATION – ,– .
© COPYRIGHT – By – ALL RIGHTS RESERVED.

LOC	DIST
ES	00

REVISIONS

P	LTR	DESCRIPTION	DATE	DWN	APVD
	–	SEE SHEET 1	–	–	–

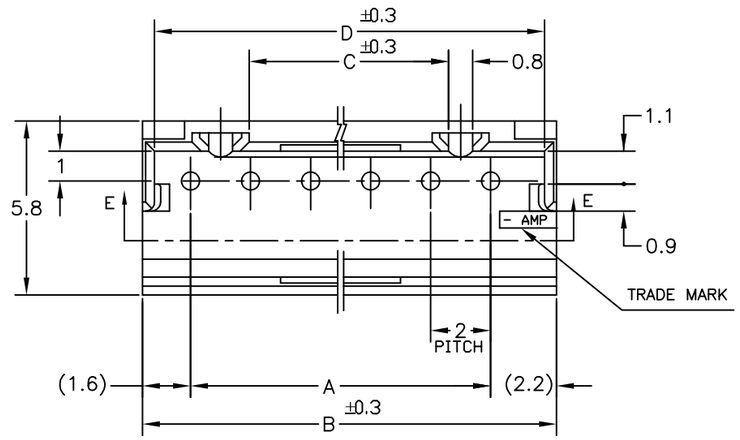

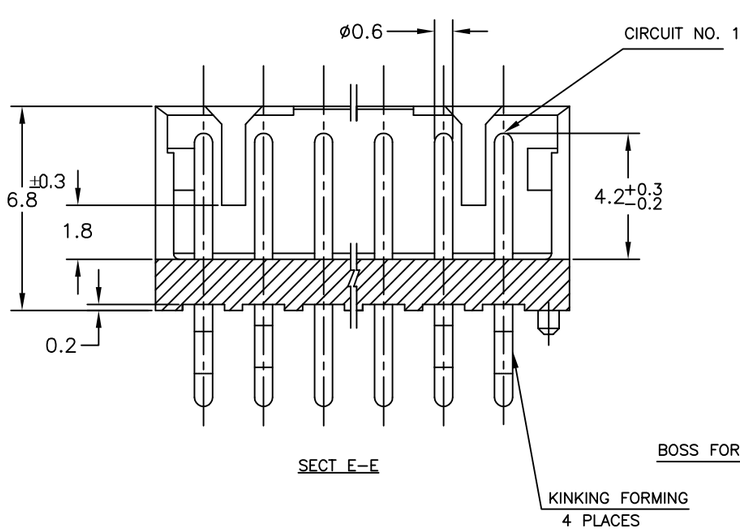

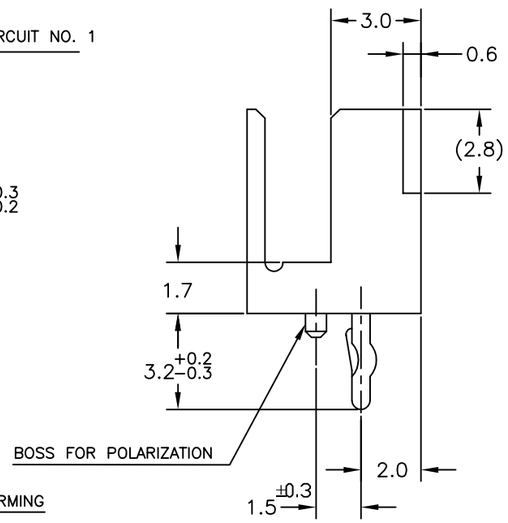

6~15 Pos.

NOTES:

1.MATERIAL: HOUSING – NYLON 66 (UL94V–0)
POST – TIN BRASS

	1-292251-5		15	28	31.8	25.2	31.0
	1-	-4	14	26	29.8	23.2	29.0
	1-	-3	13	24	27.8	21.2	27.0
	1-	-2	12	22	25.8	19.2	25.0
	1-	-1	11	20	23.8	17.2	23.0
	1-	-0	10	18	21.8	15.2	21.0
		-9	9	16	19.8	13.2	19.0
		-8	8	14	17.8	11.2	17.0
		-7	7	12	15.8	9.2	15.0
		-6	6	10	13.8	7.2	13.0
		-5	5	8	11.8	5.2	11.0
2-292251-4		-4	4	6	9.8	3.2	9.0
		-3	3	4	7.8	0	7.0
2-292251-2	292251-2		2	2	5.8	0	5.0
BLUE	NATURAL		Pos.	A	B	C	D
PART NO.							

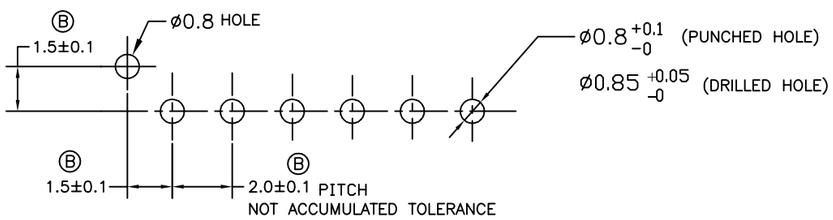

RECOMMENDABLE PCB LAYOUT
(PCB THK:0.8–1.6)

THIS DRAWING IS A CONTROLLED DOCUMENT.

DIMENSIONS: mm

TOLERANCES UNLESS OTHERWISE SPECIFIED: ±0.2
~~0 PLC ±–~~
~~1 PLC ±–~~
~~2 PLC ±–~~
~~3 PLC ±–~~
~~4 PLC ±–~~
ANGLES ±–

MATERIAL –

FINISH –

DWN –
CHK –
APVD –
PRODUCT SPEC –
APPLICATION SPEC –
WEIGHT –

TE Connectivity

NAME
POST HEADER ASS'Y POLARIZE TYPE (BOX–V TYPE)
(AMP CT CONNECTOR 2mm PITCH)

SIZE	CAGE CODE	DRAWING NO	RESTRICTED TO
A3	00779	C-292251	–

CUSTOMER DRAWING | SCALE 5:1 | SHEET 2 OF 2 | REV B2