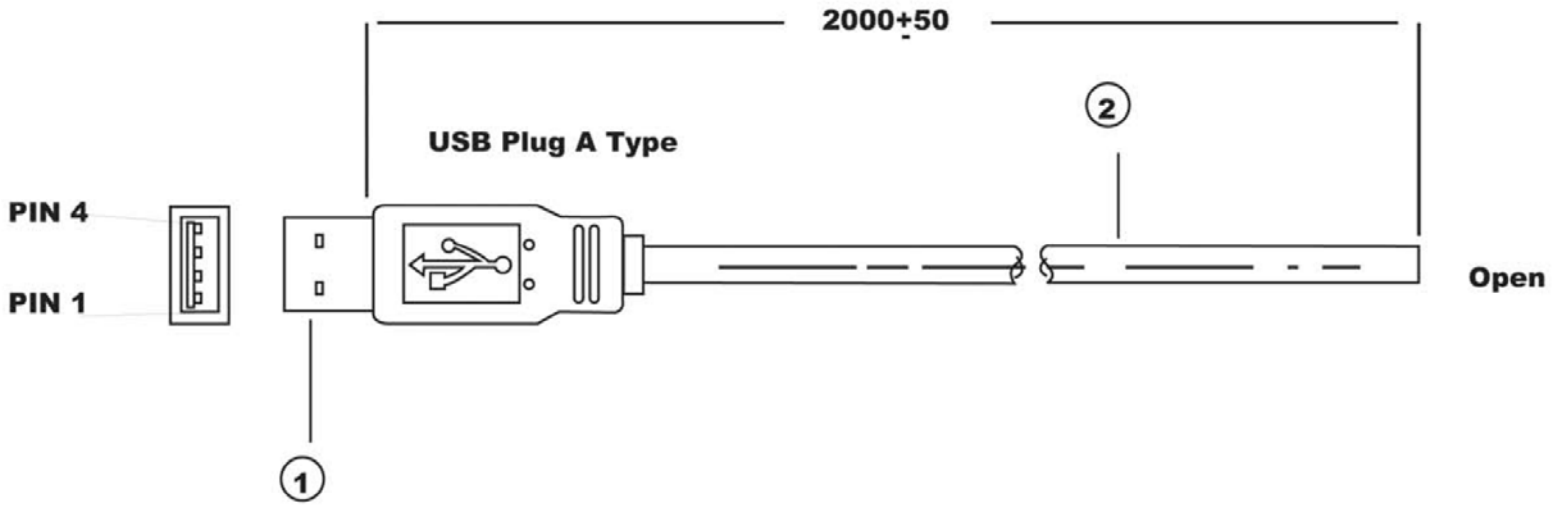

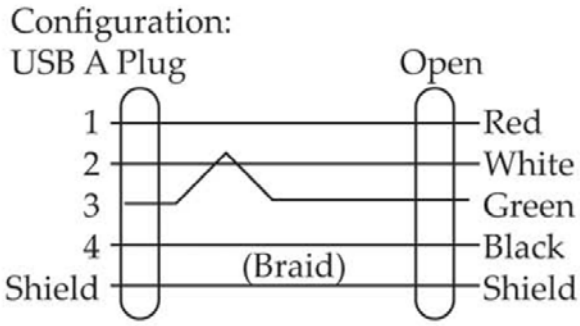

Material:

1.Cable:UL2725,#28X1P+#24X2C+65%Braid, O.D:5.0

2.Connector: USB A Plug,

Note:

1.Total Length: 2000±50mm

2.Color: Black

3.Molded Type

RoHS Complaint

Scale	1:1							Name
TOLERANCE								
X.X	±0.40				Drawn	1/31/12	Miller	
X.XX	±0.25				Approved	1/31/12	Warner	
X.XXX	±0.15							
Angle	±3°			15.12.2011	Lucas			
			Modification	Date	Name			

ASSMANN WSW components

Item No. AK670-OE-BLACK

Title USB Cable A-Male to Open End, 2M

Drawing No.

rev01

Replace

Sheet