MICRO SWITCH
FREEPORT, ILLINOIS, U.S.A.
A DIVISION OF HONEYWELL
FED. MFG. CODE 91929

SWITCH - ENCLOSED

CATALOG LISTING
442EN222-6

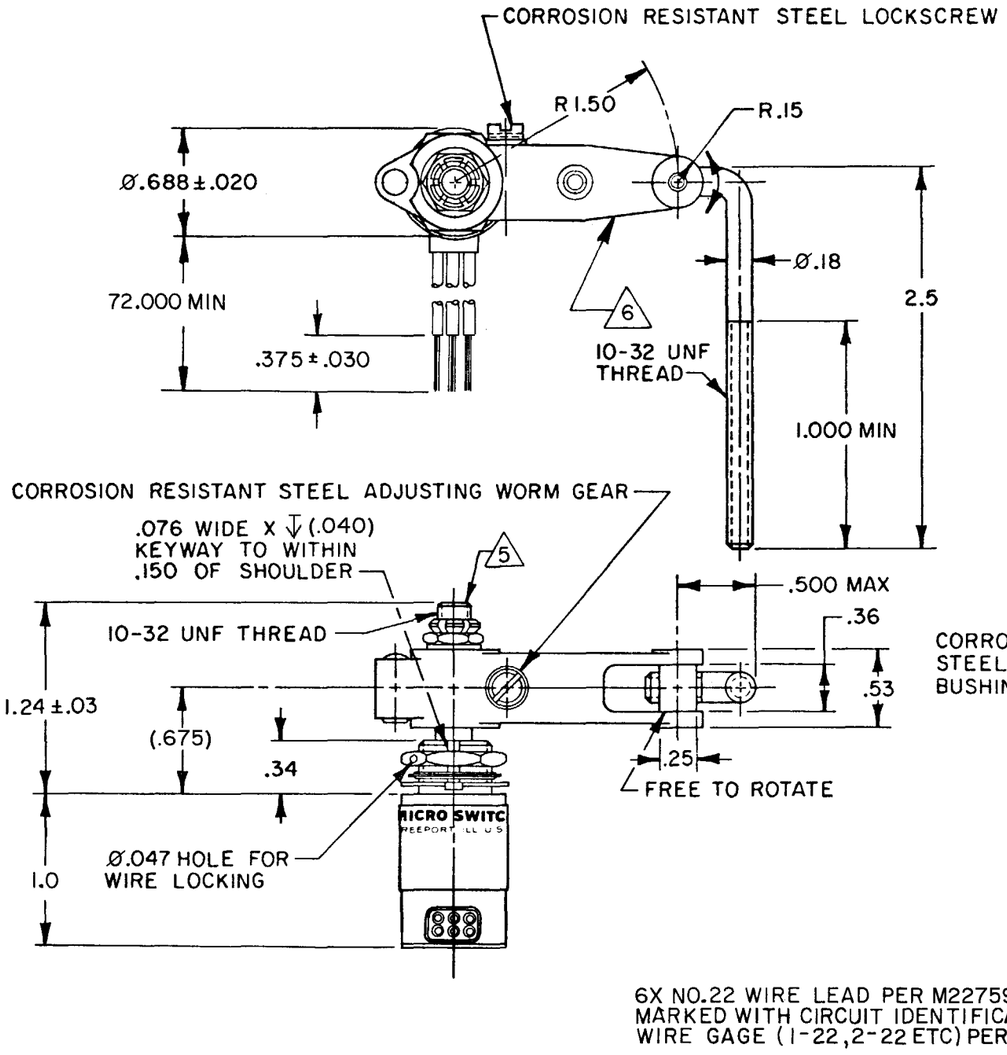

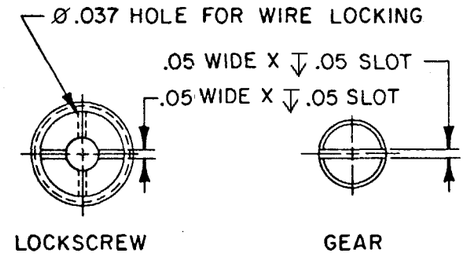

LEVER MAY BE ADJUSTED FOR AN INFINITE NUMBER OF POSITIONS THRU 360°. ADJUSTMENT IS MADE BY LOOSENING THE LOCK NUT AND THEN THE LOCKSCREW AND TURNING GEAR UNTIL LEVER IS IN DESIRED POSITION. LOCKSCREW AND LOCK NUT ON SHAFT IS THEN TIGHTENED TO POSITIVELY LOCK LEVER IN POSITION

LEVER ADJUSTMENT DETAIL
SCALE 2:1

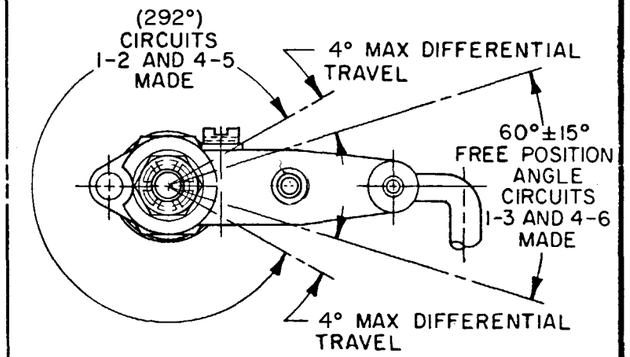

CHARACTERISTICS

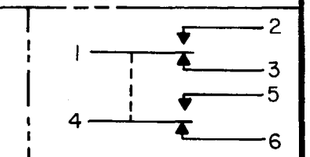

CIRCUIT DIAGRAM

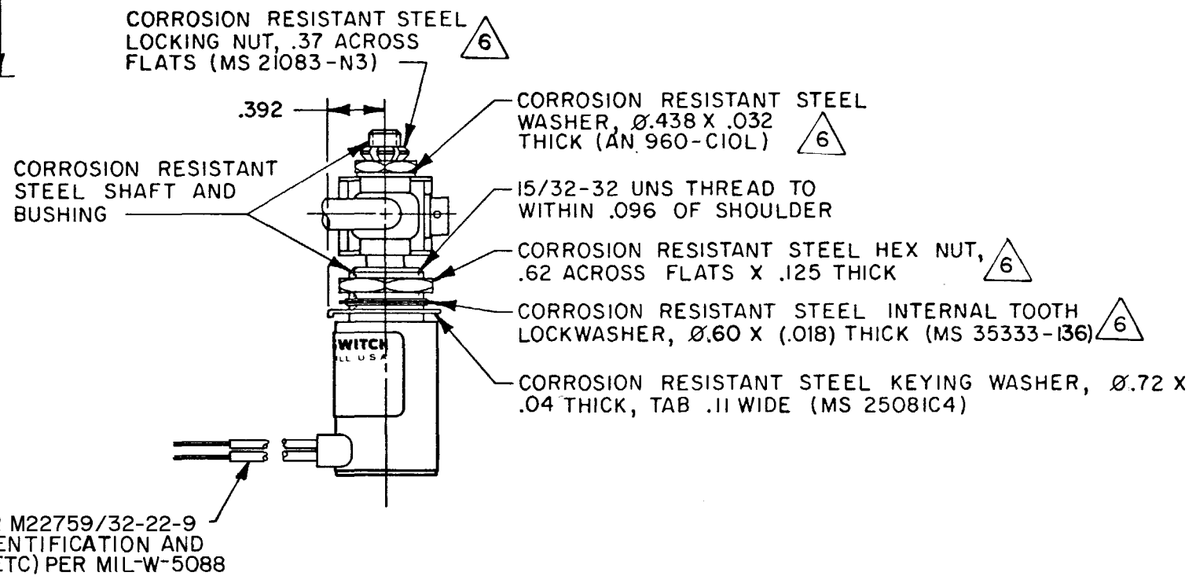

ANSI Y14.5M-1982 APPLIES

THIS DRAWING COVERS A PROPRIETARY ITEM AND IS THE PROPERTY OF MICRO SWITCH, A DIVISION OF HONEYWELL. THIS DRAWING IS NOT TO BE COPIED OR USED WITHOUT THE APPROVAL OF MICRO SWITCH.

THIRD ANGLE PROJECTION

SCALE FULL

DO NOT SCALE PRINT

TOLERANCES
APPLY TO DESIGN UNITS. CONVERSIONS ARE ONLY FOR REFERENCE. UNLESS NOTED, TOLERANCES ARE ±

	DIM. mm	TOL. mm/in	DIM. in	TOL. mm/in
NO PLACES	X	1/.04		
ONE PLACE	X.X	0.4/.016	X.X	0.8/.03
TWO PLACES	X.XX	0.15/.006	X.XX	0.38/.015
THREE PLACES			X.XXX	0.13/.005
ANGLES				

DESIGN UNITS SI METRIC ☐ US CUSTOMARY ☒

RAW MATERIAL - COMMERCIAL STANDARD
MICRO SWITCH STANDARDS APPLY
DIMENSIONS ARE TO BE MET BEFORE PROTECTIVE COATINGS ARE APPLIED

WEIGHT 7.3 OZ MAX

CHARACTERISTICS	
OPERATING TORQUE	3 IN LB MAX
PRETRAVEL	SEE DETAIL
DIFFERENTIAL TRAVEL	SEE DETAIL
OVERTRAVEL	SEE DETAIL
FREE POSITION	SEE DETAIL

ELECTRICAL DATA

CONTACT ARRANGEMENT 2X S P D T 7

LOAD	28 VDC SEA LEVEL	28 VDC 50,000 FT.
RES	7	7
IND	2.5	1.0

NOTES
1 - CORROSION RESISTANT STEEL ENCLOSURE
2 - SWITCH SEALED PER MIL-PRF-8805 SYMBOL 4
3 - CIRCUIT DIAGRAM AND CATALOG LISTING ARE SHOWN ON NAMEPLATE
4 - UNIT PROVIDES NO SHAFT RESTORING TORQUE. THE ACTUATING DEVICE MUST CONTROL MOVEMENT OF THE SHAFT
5 DO NOT APPLY MORE THAN 20-25 INCH-POUNDS OF TORQUE WHEN TIGHTENING LOCKING NUT
6 HARDWARE MAY BE PACKAGED UNASSEMBLED PER MIL-PRF-8805
7 SILVER PROJECTION, GOLD PLATED CONTACTS

CATALOG LISTING 442EN222-6
PAGE 1 OF 1
ISSUE M 4
RELEASE NO. PR-23402
REPLACES
CHECK
REVISIONS
A PR23402 JAS 22 JUN 98
B 200824 CSL 17 JUL 00
CHECK
CHECK 23 JUN 98
CHECK J A F
CHECK 22 JUN 98
DRAWN J A S
RASTER

MICRO SWITCH
FREEPORT, ILLINOIS, U.S.A.
A DIVISION OF HONEYWELL
FED. MFG. CODE 91929

SWITCH - ENCLOSED

CATALOG LISTING
442EN222-6

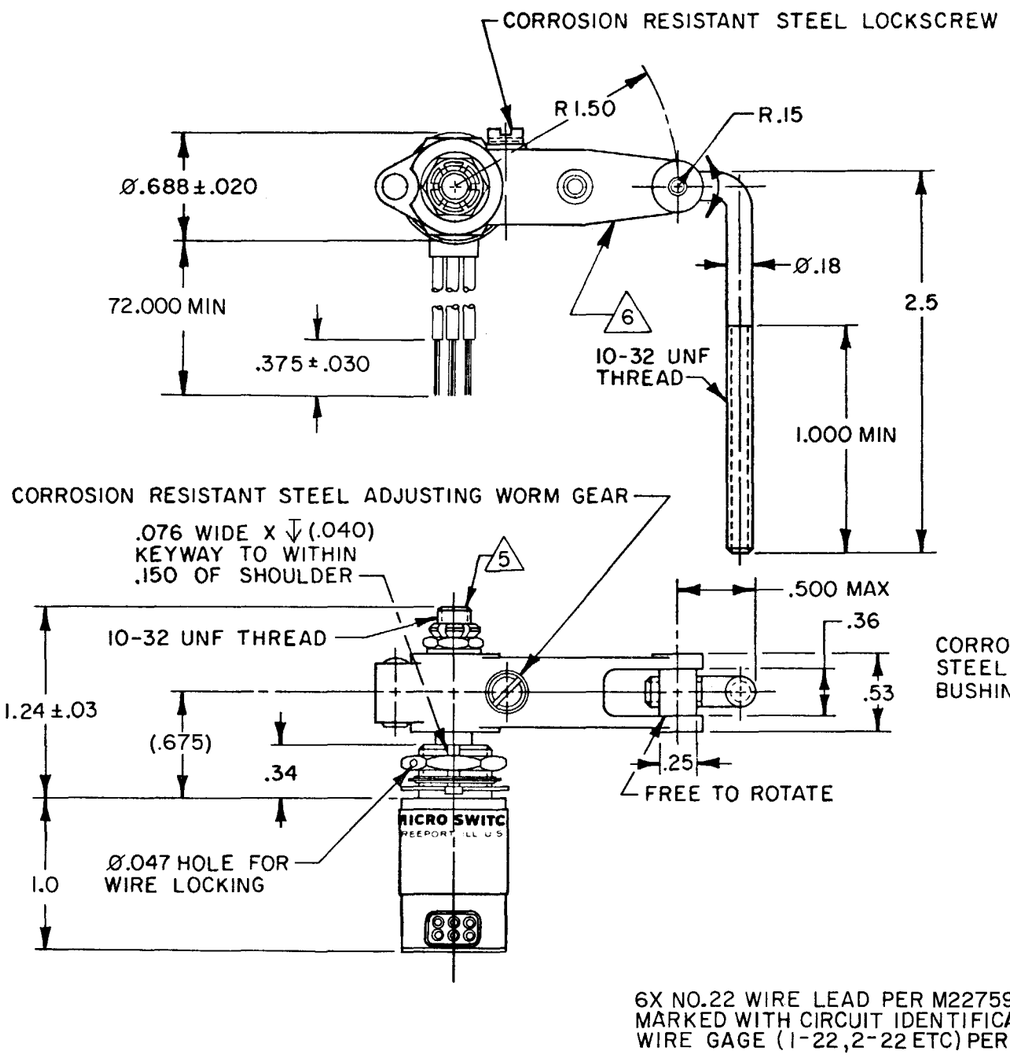

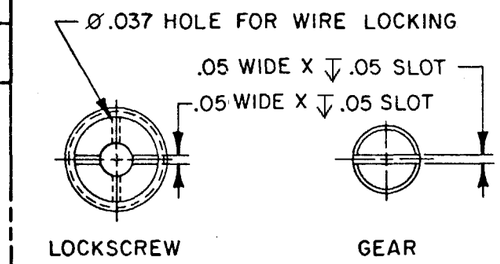

LEVER MAY BE ADJUSTED FOR AN INFINITE NUMBER OF POSITIONS THRU 360°. ADJUSTMENT IS MADE BY LOOSENING THE LOCK NUT AND THEN THE LOCKSCREW AND TURNING GEAR UNTIL LEVER IS IN DESIRED POSITION. LOCKSCREW AND LOCK NUT ON SHAFT IS THEN TIGHTENED TO POSITIVELY LOCK LEVER IN POSITION

LEVER ADJUSTMENT DETAIL
SCALE 2:1

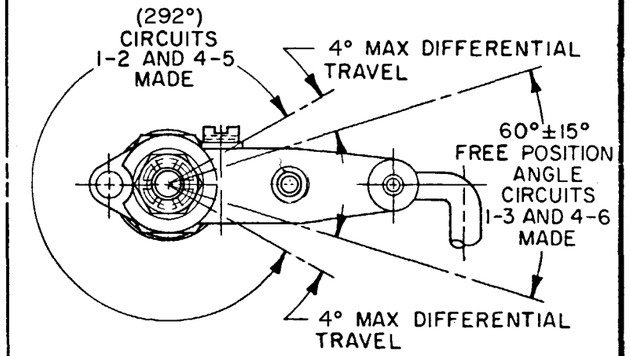

CHARACTERISTICS

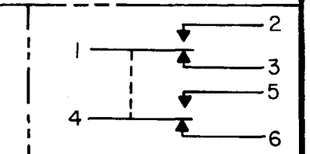

CIRCUIT DIAGRAM

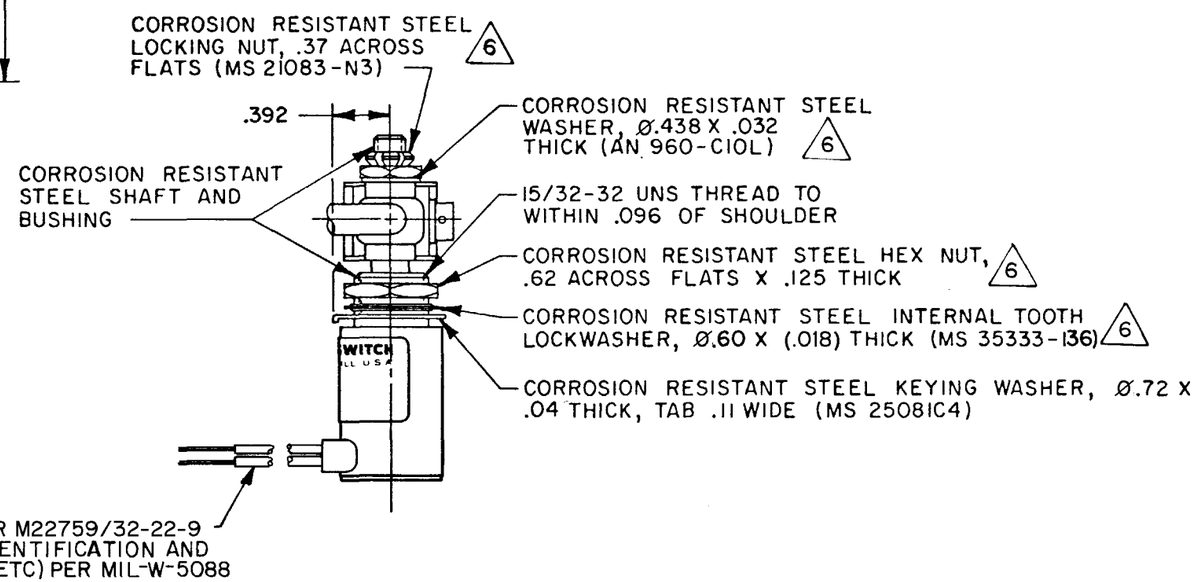

ANSI Y14.5M-1982 APPLIES

THIS DRAWING COVERS A PROPRIETARY ITEM AND IS THE PROPERTY OF MICRO SWITCH, A DIVISION OF HONEYWELL. THIS DRAWING IS NOT TO BE COPIED OR USED WITHOUT THE APPROVAL OF MICRO SWITCH.

THIRD ANGLE PROJECTION

SCALE FULL
DO NOT SCALE PRINT

TOLERANCES
APPLY TO DESIGN UNITS. CONVERSIONS ARE ONLY FOR REFERENCE. UNLESS NOTED, TOLERANCES ARE ±

	DIM. mm	TOL. mm/in	DIM. in	TOL. mm/in
NO PLACES	X	1/.04		
ONE PLACE	X.X	0.4/.016	X.X	0.8/.03
TWO PLACES	X.XX	0.15/.006	X.XX	0.38/.015
THREE PLACES			X.XXX	0.13/.005
ANGLES				

DESIGN UNITS: SI METRIC ☐ US CUSTOMARY ☒

RAW MATERIAL - COMMERCIAL STANDARD
MICRO SWITCH STANDARDS APPLY
DIMENSIONS ARE TO BE MET BEFORE PROTECTIVE COATINGS ARE APPLIED

WEIGHT 7.3 OZ MAX

CHARACTERISTICS	
OPERATING TORQUE - - - - - 3 IN LB MAX	
PRETRAVEL	SEE DETAIL
DIFFERENTIAL TRAVEL	SEE DETAIL
OVERTRAVEL	SEE DETAIL
FREE POSITION	SEE DETAIL

ELECTRICAL DATA

CONTACT ARRANGEMENT
2X S P D T 7

LOAD	28 VDC SEA LEVEL	28 VDC 50,000 FT.
RES	7	7
IND	4	2.5
MOTOR	4	

NOTES
1 - CORROSION RESISTANT STEEL ENCLOSURE
2 - SWITCH SEALED PER MIL-S-8805 SYMBOL 4
3 - CIRCUIT DIAGRAM AND CATALOG LISTING ARE SHOWN ON NAMEPLATE
4 - UNIT PROVIDES NO SHAFT RESTORING TORQUE. THE ACTUATING DEVICE MUST CONTROL MOVEMENT OF THE SHAFT
5 DO NOT APPLY MORE THAN 20-25 INCH-POUNDS OF TORQUE WHEN TIGHTENING LOCKING NUT
6 HARDWARE MAY BE PACKAGED UNASSEMBLED PER MIL-S-8805
7 SILVER PROJECTION, GOLD PLATED CONTACTS

CATALOG LISTING 442EN222-6 | PAGE 1 OF 1 | RELEASE NO. PR-23402 | REPLACES
ISSUE M 3
REVISIONS: A PR23402 J A S 22 JUN 98
CHECK | CHECK | 23 JUN 98 | J A F | CHECK | 22 JUN 98
DRAWN J A S
FORMTEK