REV.	DATE	ECR NO.	DESCRIPTION
NC	03/20/05	–	INITIAL RELEASE
A	01/20/09	100073	UPDATE DRAWING FORMAT

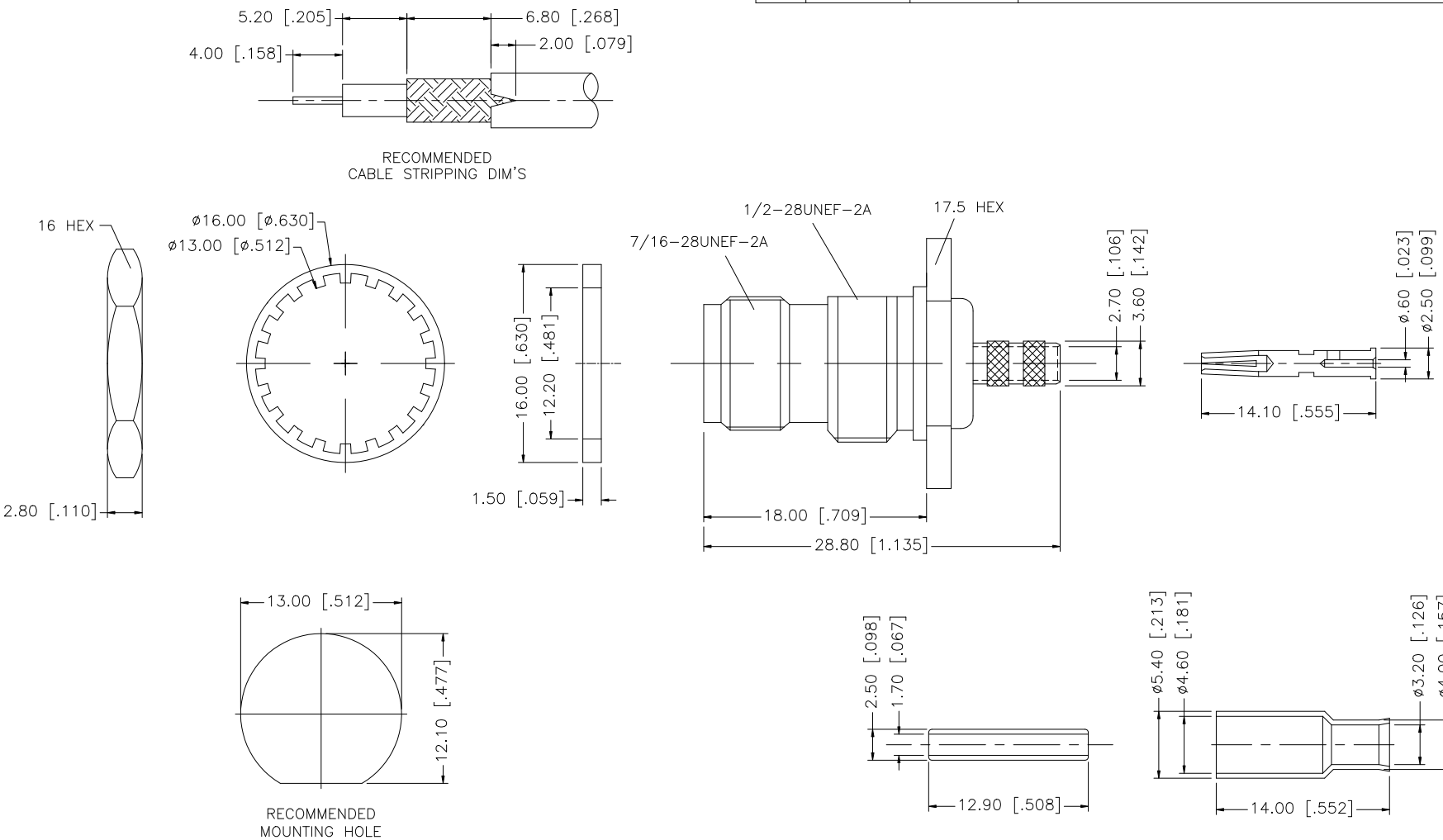

	DESCRIPTION	MATERIAL	FINISH	QTY
8	FERRULE	COPPER	NICKEL	1
7	SLEEVE	DELRIN	NATURAL	1
6	HEX NUT	BRASS	NICKEL	1
5	LOCK WASHER	BRASS	NICKEL	1
4	GASKET	SILICONE	RED	1
3	CONTACT PIN	BER. COPPER	GOLD	1
2	INSULATOR	DELRIN	NATURAL	1
1	BODY	BRASS	NICKEL	1

UNLESS OTHERWISE SPECIFIED DIMENSIONS ARE IN MILLIMETERS. DIMENSIONS IN [ ] ARE IN INCHES AND FOR CUSTOMER REFERANCE ONLY.

UNLESS OTHERWISE SPECIFIED TOLERANCES FOR MILLIMETERS ARE:
0.5 – 8mm ± 0.20mm
8 – 30mm ± 0.40mm
30 – 120mm ± 0.50mm

UNLESS OTHERWISE SPECIFIED TOLERANCES FOR INCHES ARE:
.020 – .315 = ± 0.007"
.315 – 1.180 = ± 0.015"
1.180 – 4.724 = ± 0.020"

DO NOT SCALE DRAWING

APPROVALS		DATE
DRAWN	GRS	01/20/09
CHECKED		
ISSUED		
SHEET	1 OF 1	

CAD FILE C:/122/122358.DWG

Amphenol Connex

PART DESCRIPTION
TNC BULKHEAD CRIMP JACK
(FOR RG-174/U, 316/U DOUBLE BRAID)

PART NO. 122358

DWG. NO. 122358.DWG | REV. NC | SIZE A | SCALE NA