Si photodiode
S1227 series

For UV to visible, precision photometry; suppressed IR sensitivity

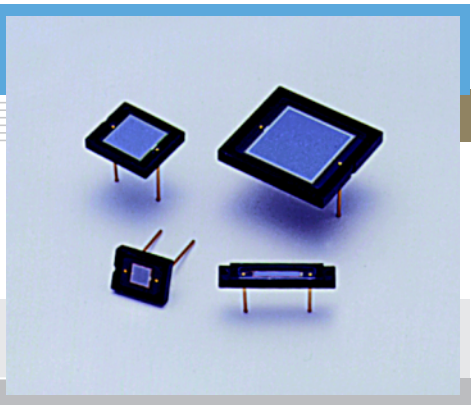

Features

- High UV sensitivity: QE 75 % (λ=200 nm)
- Suppressed IR sensitivity
- Low dark current

Applications

- Analytical equipment
- Optical measurement equipment, etc.

■ General ratings / Absolute maximum ratings

Type No.	Dimensional outline/ Window material *	Package (mm)	Active area size (mm)	Effective active area (mm^2)	Absolute maximum ratings: Reverse voltage V_R Max. (V)	Operating temperature Topr (°C)	Storage temperature Tstg (°C)
S1227-16BQ	①/Q	2.7 × 15	1.1 × 5.9	5.9	5	-20 to +60	-20 to +80
S1227-16BR	②/R						
S1227-33BQ	③/Q	6 × 7.6	2.4 × 2.4	5.7			
S1227-33BR	④/R						
S1227-66BQ	⑤/Q	8.9 × 10.1	5.8 × 5.8	33			
S1227-66BR	⑥/R						
S1227-1010BQ	⑦/Q	15 × 16.5	10 × 10	100			
S1227-1010BR	⑧/R						

■ Electrical and optical characteristics (Typ. Ta=25 °C, unless otherwise noted)

Type No.	Spectral response range λ (nm)	Peak sensitivity wavelength λp (nm)	Photo sensitivity S (A/W): λp	200 nm Min.	200 nm Typ.	He-Ne Laser 633 nm	Short circuit current Isc 100 lx: Min. (μA)	Short circuit current Isc 100 lx: Typ. (μA)	Dark current I_D V_R=10 mV Max. (pA)	Temp. coefficient T_{CID} (times/°C)	Rise time tr V_R=0 V R_L=1 kΩ (μs)	Terminal capacitance Ct V_R=0 V f=10 kHz (pF)	Shunt resistance Rsh V_R=10 mV (GΩ): Min.	Shunt resistance Rsh V_R=10 mV (GΩ): Typ.	NEP (W/Hz$^{1/2}$)
S1227-16BQ	190 to 1000	720	0.36	0.10	0.12	0.34	2	3.2	5	1.12	0.5	170	2	20	2.5×10^{-15}
S1227-16BR	320 to 1000		0.43	-	-	0.39	2.2	3.7							2.1×10^{-15}
S1227-33BQ	190 to 1000		0.36	0.10	0.12	0.34	2	3.0	5		0.5	160	2	20	2.5×10^{-15}
S1227-33BR	320 to 1000		0.43	-	-	0.39	2.2	3.7							2.1×10^{-15}
S1227-66BQ	190 to 1000		0.36	0.10	0.12	0.34	11	16	20		2	950	0.5	5	5.0×10^{-14}
S1227-66BR	320 to 1000		0.43	-	-	0.39	13	19							4.2×10^{-15}
S1227-1010BQ	190 to 1000		0.36	0.10	0.12	0.34	32	44	50		7	3000	0.2	2	8.0×10^{-14}
S1227-1010BR	320 to 1000		0.43	-	-	0.39	36	53							6.7×10^{-14}

* Window material Q: quartz glass, R: resin coating

SOLID STATE DIVISION

■ Spectral response

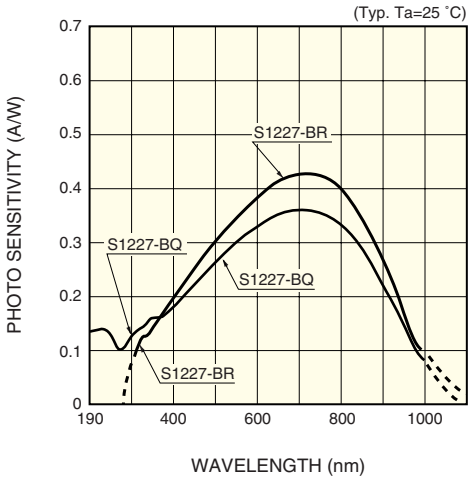

KSPDB0094EA

■ Photo sensitivity temperature characteristic

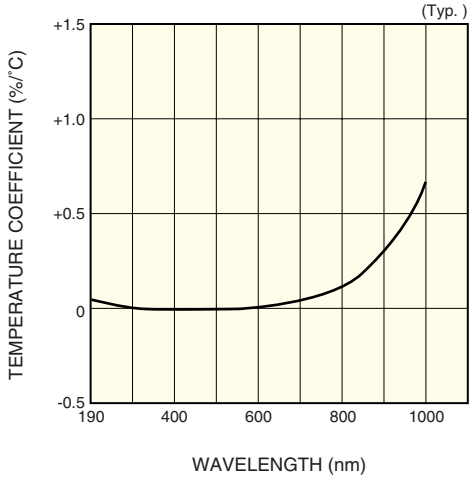

KSPDB0030EB

■ Rise time vs. load resistance

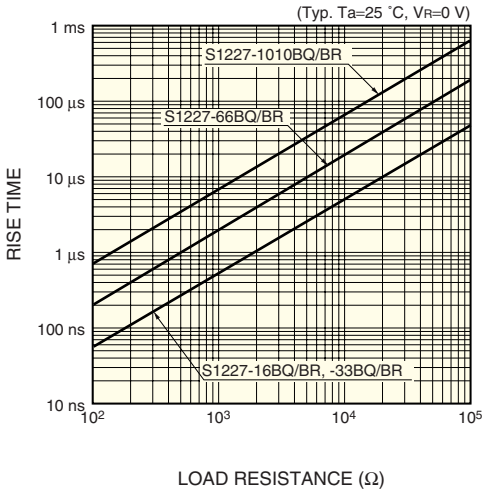

KSPDB0095EA

■ Dark current vs. reverse voltage

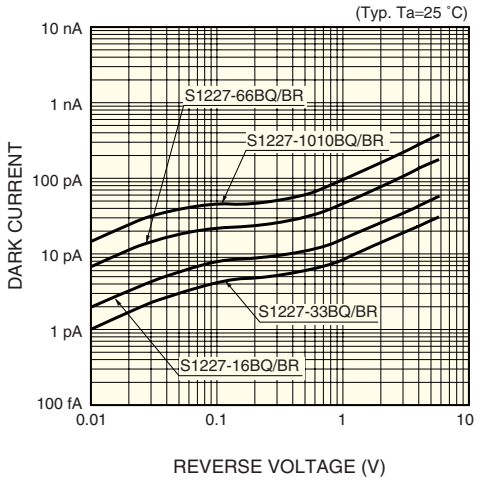

KSPDB0096EA

■ Shunt resistance vs. ambient temperature

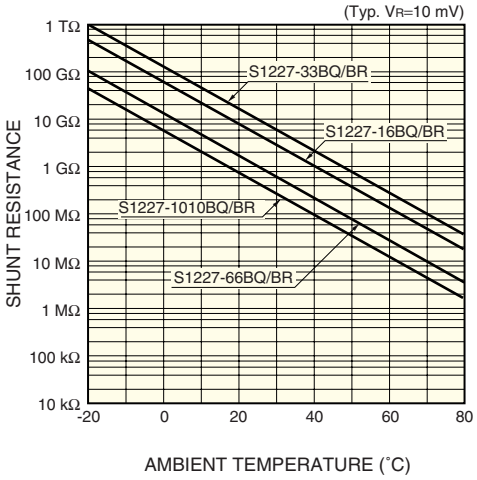

KSPDB0097EA

■ Photo sensitivity linearity (S1227-1010BQ/-1010BR)

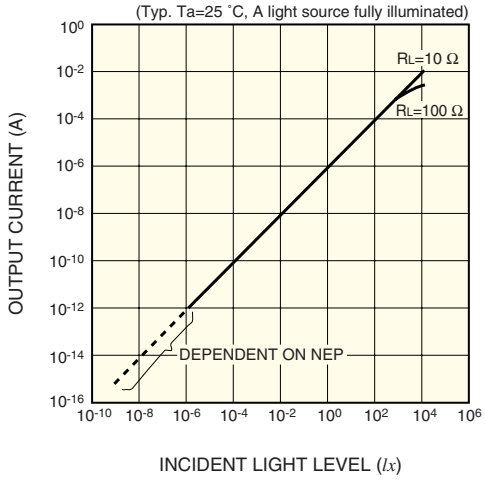

KSPDB0026EB

■ Dimensional outlines (unit: mm)

① S1227-16BQ

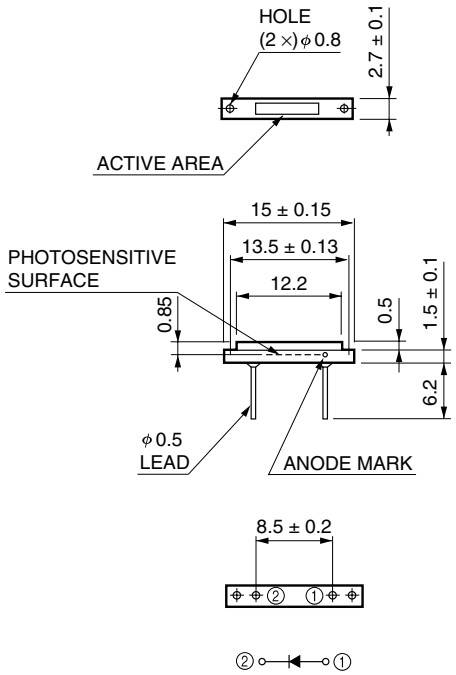

KSPDA0094EA

② S1227-16BR

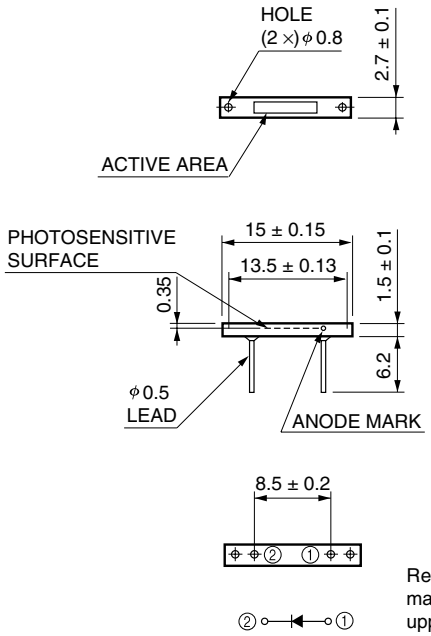

Resin coating may extend a maximum of 0.1 mm above the upper surface of the package.

KSPDA0095EA

③ S1227-33BQ

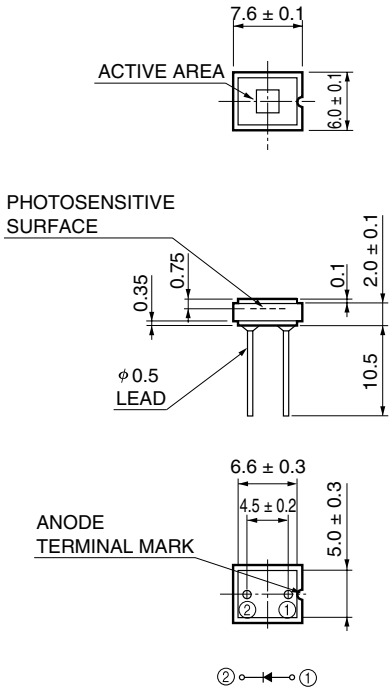

KSPDA0096EA

④ S1227-33BR

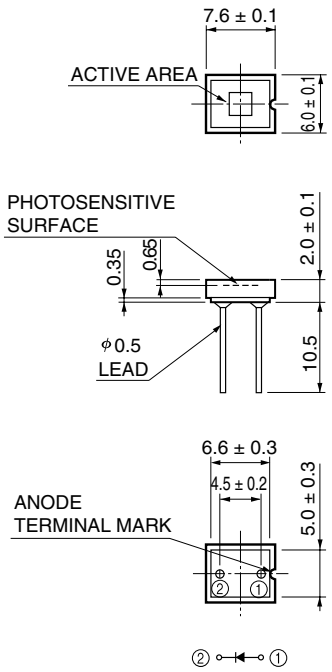

Resin coating may extend a maximum of 0.1 mm above the upper surface of the package.

KSPDA0097EA

⑤ S1227-66BQ

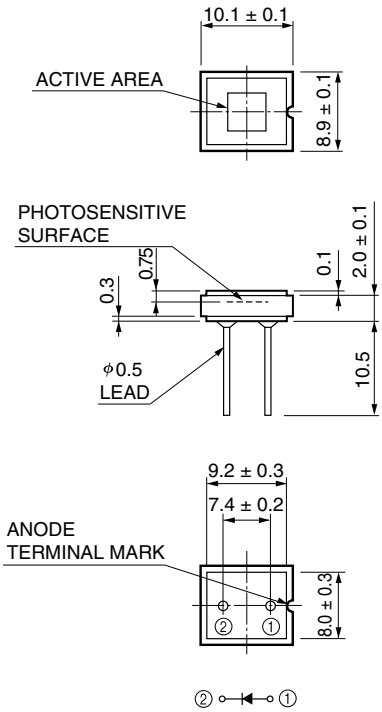

KSPDA0098EA

⑥ S1227-66BR

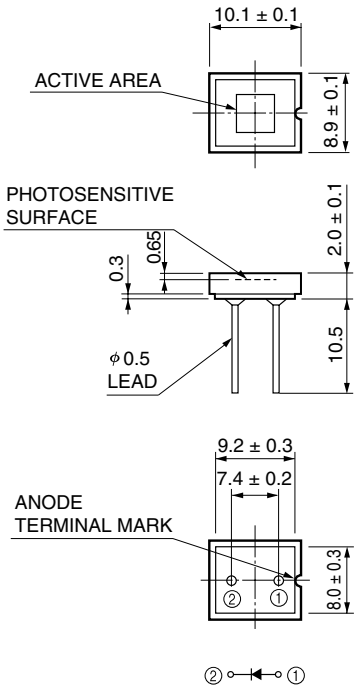

Resin coating may extend a maximum of 0.1 mm above the upper surface of the package.

KSPDA0099EA

⑦ S1227-1010BQ

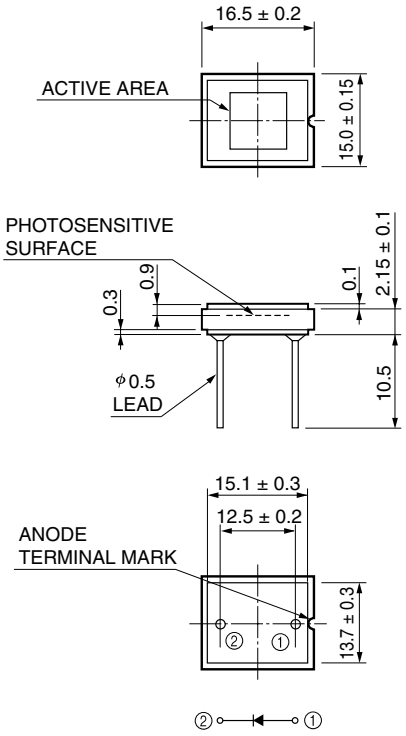

KSPDA0100EA

⑧ S1227-1010BR

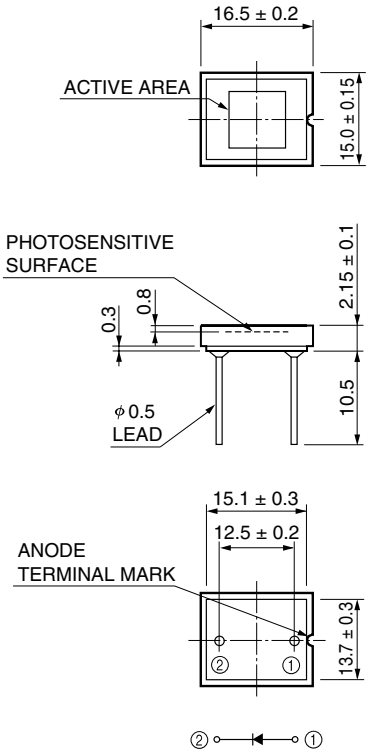

Resin coating may extend a maximum of 0.1 mm above the upper surface of the package.

KSPDA0101EA

HAMAMATSU

Information furnished by HAMAMATSU is believed to be reliable. However, no responsibility is assumed for possible inaccuracies or omissions. Specifications are subject to change without notice. No patent rights are granted to any of the circuits described herein. ©2001 Hamamatsu Photonics K.K.

HAMAMATSU PHOTONICS K.K., Solid State Division
1126-1 Ichino-cho, Hamamatsu City, 435-8558 Japan, Telephone: (81) 053-434-3311, Fax: (81) 053-434-5184, http://www.hamamatsu.com
U.S.A.: Hamamatsu Corporation: 360 Foothill Road, P.O.Box 6910, Bridgewater, N.J. 08807-0910, U.S.A., Telephone: (1) 908-231-0960, Fax: (1) 908-231-1218
Germany: Hamamatsu Photonics Deutschland GmbH: Arzbergerstr. 10, D-82211 Herrsching am Ammersee, Germany, Telephone: (49) 08152-3750, Fax: (49) 08152-2658
France: Hamamatsu Photonics France S.A.R.L.: 8, Rue du Saule Trapu, Parc du Moulin de Massy, 91882 Massy Cedex, France, Telephone: 33-(1) 69 53 71 00, Fax: 33-(1) 69 53 71 10
United Kingdom: Hamamatsu Photonics UK Limited: 2 Howard Court, 10 Tewin Road, Welwyn Garden City, Hertfordshire AL7 1BW, United Kingdom, Telephone: (44) 1707-294888, Fax: (44) 1707-325777
North Europe: Hamamatsu Photonics Norden AB: Smidesvägen 12, SE-171 41 Solna, Sweden, Telephone: (46) 8-509-031-00, Fax: (46) 8-509-031-01
Italy: Hamamatsu Photonics Italia S.R.L.: Strada della Moia, 1/E, 20020 Arese, (Milano), Italy, Telephone: (39) 02-935-81-733, Fax: (39) 02-935-81-741

Cat. No. KSPD1036E01
Mar. 2001 DN