71M6541D/F/G and 71M6542F/G Energy Meter ICs

GENERAL DESCRIPTION

The 71M6541D/71M6541F/71M6541G/71M6542F/71M6542G (71M654x) are 4th-generation single-phase metering SoCs with a 5MHz 8051-compatible MPU core, low-power RTC with digital temperature compensation, flash memory, and LCD driver. Our Single Converter Technology® with a 22-bit delta-sigma ADC, three or four analog inputs, digital temperature compensation, precision voltage reference, and a 32-bit computation engine (CE) supports a wide range of metering applications with very few external components.

The 71M6541/2 devices support optional interfaces to the 71M6x01 series of isolated sensors, which offer BOM cost reduction, immunity to magnetic tamper, and enhanced reliability. Other features include an SPI interface, advanced power management, ultra-low-power operation in active and battery modes, 3/5KB shared RAM and 32/64/128KB of flash memory that can be programmed in the field with code and/or data during meter operation and the ability to drive up to six LCD segments per SEG driver pin. High processing and sampling rates combined with differential inputs offer a powerful metering platform for residential meters.

A complete array of code development tools, demonstration code, and reference designs enable rapid development and certification of meters that meet all ANSI and IEC electricity metering standards worldwide.

The 71M654x family operates over the industrial temperature range and comes in 64-pin (71M6541D/F/G) and 100-pin (71M6542F/G) lead(Pb)-free LQFP packages.

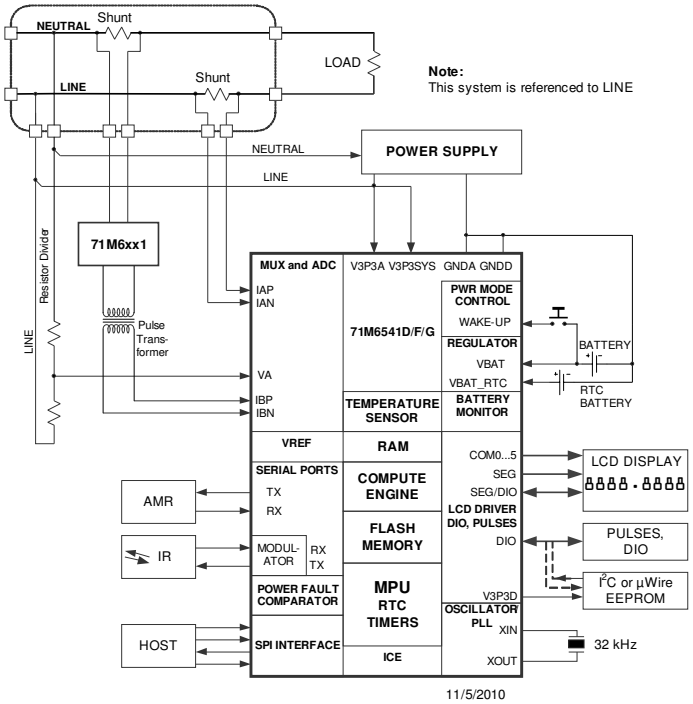

Single Converter Technology is a registered trademark of Maxim Integrated Products, Inc.

BENEFITS AND FEATURES

- SoC Integration and Unique Isolation Technique Reduces BOM Cost Without Sacrificing Performance
  - 0.1% Typical Accuracy Over 2000:1 Current Range
  - Exceeds IEC 62053/ANSI C12.20 Standards
  - Four-Quadrant Metering
  - 46-64Hz Line Frequency Range with the Same Calibration
  - Phase Compensation (±10°)
  - Independent 32-Bit Compute Engine
  - 32KB Flash, 3KB RAM (71M6541D)
  - 64KB Flash, 5KB RAM (71M6541F/42F)
  - 128KB Flash, 5KB RAM (71M6541G/42G)
  - Built-In Flash Security
  - SPI interface for Flash Program Capability
  - Up to Four Pulse Outputs with Pulse Count
  - 8-Bit MPU (80515), Up to 5 MIPS
  - Full-Speed MPU Clock in Brownout Mode
  - LCD Driver Allows Up to 6 Commons/Up to 56 Pins
  - 5V LCD Driver with DAC
  - Up to 51 Multifunction DIO Pins
  - Hardware Watchdog Timer (WDT)
  - Two UARTs for IR and AMR
  - IR LED Driver with Modulation
- Innovative Isolation Technology (Requires Companion 71M6xxx Sensor, also from Maxim Integrated) Eliminates Current Transformers
  - Two Current Sensor Inputs with Selectable Differential Mode
  - Selectable Gain of 1 or 8 for One Current Input to Support Shunts
  - High-Speed Wh/VARh Pulse Outputs with Programmable Width
- Digital Temperature Compensation Improves System Performance
  - Metrology Compensation
  - Accurate RTC for TOU Functions with Automatic Temperature Compensation for Crystal in All Power Modes
- Power Management Extends Battery Life During Power Outages
  - Three Battery-Backup Modes:
    - Brownout Mode (BRN)
    - LCD Mode (LCD)
    - Sleep Mode (SLP)
  - Wake-Up on Pin Events and Wake-On Timer
  - 1µA in Sleep Mode

For pricing, delivery, and ordering information, please contact Maxim Direct at 1-888-629-4642, or visit Maxim Integrated's website at www.maximintegrated.com.

19-5376; Rev 5; 1/15

Table of Contents

1 Introduction 10
2 Hardware Description 11
2.1 Hardware Overview 11
2.2 Analog Front End (AFE) 12
2.2.1 Signal Input Pins 14
2.2.2 Input Multiplexer 15
2.2.3 Delay Compensation 19
2.2.4 ADC Pre-Amplifier 20
2.2.5 A/D Converter (ADC) 20
2.2.6 FIR Filter 20
2.2.7 Voltage References 20
2.2.8 71M6x01 Isolated Sensor Interface (Remote Sensor Interface) 22
2.3 Digital Computation Engine (CE) 24
2.3.1 CE Program Memory 24
2.3.2 CE Data Memory 24
2.3.3 CE Communication with the MPU 25
2.3.4 Meter Equations 25
2.3.5 Real-Time Monitor (RTM) 25
2.3.6 Pulse Generators 27
2.3.7 CE Functional Overview 28
2.4 80515 MPU Core 31
2.4.1 Memory Organization and Addressing 31
2.4.2 Special Function Registers (SFRs) 33
2.4.3 Generic 80515 Special Function Registers 34
2.4.4 Instruction Set 37
2.4.5 UARTs 37
2.4.6 Timers and Counters 39
2.4.7 WD Timer (Software Watchdog Timer) 41
2.4.8 Interrupts 41
2.5 On-Chip Resources 48
2.5.1 Physical Memory 48
2.5.2 Oscillator 50
2.5.3 PLL and Internal Clocks 50
2.5.4 Real-Time Clock (RTC) 51
2.5.5 71M654x Temperature Sensor 56
2.5.6 71M654x Battery Monitor 57
2.5.7 UART and Optical Interface 58
2.5.8 Digital I/O and LCD Segment Drivers 59
2.5.9 EEPROM Interface 70
2.5.10 SPI Slave Port 73
2.5.11 Hardware Watchdog Timer 78
2.5.12 Test Ports (TMUXOUT and TMUX2OUT Pins) 78
3 Functional Description 80
3.1 Theory of Operation 80
3.2 Battery Modes 81
3.2.1 BRN Mode 83
3.2.2 LCD Mode 83
3.2.3 SLP Mode 84

3.3 Fault and Reset Behavior 85
3.3.1 Events at Power-Down 85
3.3.2 IC Behavior at Low Battery Voltage 86
3.3.3 Reset Sequence 86
3.3.4 Watchdog Timer Reset 86
3.4 Wake Up Behavior 87
3.4.1 Wake on Hardware Events 87
3.4.2 Wake on Timer 90
3.5 Data Flow and MPU/CE Communication 91
4 Application Information 92
4.1 Connecting 5 V Devices 92
4.2 Direct Connection of Sensors 92
4.3 71M6541D/F/G Using Local Sensors 93
4.4 71M6541D/F/G Using 71M6x01and Current Shunts 94
4.5 71M6542F/G Using Local Sensors 95
4.6 71M6542F/G Using 71M6x01 and Current Shunts 96
4.7 Metrology Temperature Compensation 97
4.7.1 Voltage Reference Precision 97
4.7.2 Temperature Coefficients for the 71M654x 97
4.7.3 Temperature Compensation for VREF with Local Sensors 98
4.7.4 Temperature Compensation for VREF with Remote Sensor 99
4.8 Connecting I^2C EEPROMs 100
4.9 Connecting Three-Wire EEPROMs 101
4.10 UART0 (TX/RX) 101
4.11 Optical Interface (UART1) 101
4.12 Connecting the Reset Pin 102
4.13 Connecting the Emulator Port Pins 103
4.14 Flash Programming 104
4.14.1 Flash Programming via the ICE Port 104
4.14.2 Flash Programming via the SPI Port 104
4.15 MPU Firmware Library 104
4.16 Crystal Oscillator 104
4.17 Meter Calibration 104
5 Firmware Interface 105
5.1 I/O RAM Map –Functional Order 105
5.2 I/O RAM Map – Alphabetical Order 111
5.3 CE Interface Description 126
5.3.1 CE Program 126
5.3.2 CE Data Format 126
5.3.3 Constants 126
5.3.4 Environment 127
5.3.5 CE Calculations 127
5.3.6 CE Front End Data (Raw Data) 128
5.3.7 FCE Status and Control 128
5.3.8 CE Transfer Variables 131
5.3.9 Pulse Generation 133
5.3.10 Other CE Parameters 135
5.3.11 CE Calibration Parameters 136
5.3.12 CE Flow Diagrams 137

6 Electrical Specifications ... 139
6.1 Absolute Maximum Ratings ... 139
6.2 Recommended External Components ... 140
6.3 Recommended Operating Conditions ... 140
6.4 Performance Specifications ... 141
6.4.1 Input Logic Levels ... 141
6.4.2 Output Logic Levels ... 141
6.4.3 Battery Monitor ... 142
6.4.4 Temperature Monitor ... 142
6.4.5 Supply Current ... 143
6.4.6 V3P3D Switch ... 144
6.4.7 Internal Power Fault Comparators ... 144
6.4.8 2.5 V Voltage Regulator – System Power ... 144
6.4.9 2.5 V Voltage Regulator – Battery Power ... 145
6.4.10 Crystal Oscillator ... 145
6.4.11 Phase-Locked Loop (PLL) ... 145
6.4.12 LCD Drivers ... 146
6.4.13 VLCD Generator ... 147
6.4.14 VREF ... 149
6.4.15 ADC Converter ... 150
6.4.16 Pre-Amplifier for IAP-IAN ... 151
6.5 Timing Specifications ... 152
6.5.1 Flash Memory ... 152
6.5.2 SPI Slave ... 152
6.5.3 EEPROM Interface ... 152
6.5.4 RESET Pin ... 153
6.5.5 RTC ... 153
6.6 Package Outline Drawings ... 154
6.6.1 64-Pin LQFP Outline Package Drawing ... 154
6.6.2 100-Pin LQFP Package Outline Drawing ... 155
6.7 Package Markings ... 156
6.8 Pinout Diagrams ... 157
6.8.1 71M6541D/F/G LQFP-64 Package Pinout ... 157
6.8.2 71M6542F/G LQFP-100 Package Pinout ... 158
6.9 Pin Descriptions ... 159
6.9.1 Power and Ground Pins ... 159
6.9.2 Analog Pins ... 160
6.9.3 Digital Pins ... 161
6.9.4 I/O Equivalent Circuits ... 163
7 Ordering Information ... 164
7.1 71M6541D/F/G and 71M6542F/G ... 164
8 Related Information ... 164
9 Contact Information ... 164
Appendix A: Acronyms ... 165
Appendix B: Revision History ... 166

Figures

Figure 1: IC Functional Block Diagram 9
Figure 2. 71M6541D/F/G AFE Block Diagram (Local Sensors) 12
Figure 3. 71M6541D/F/G AFE Block Diagram with 71M6x01 13
Figure 4. 71M6542F/G AFE Block Diagram (Local Sensors) 13
Figure 5. 71M6542F/G AFE Block Diagram with 71M6x01 14
Figure 6: States in a Multiplexer Frame (*MUX_DIV[3:0]* = 3) 17
Figure 7: States in a Multiplexer Frame (*MUX_DIV[3:0]* = 4) 17
Figure 8: General Topology of a Chopped Amplifier 21
Figure 9: CROSS Signal with *CHOP_E* = 00 21
Figure 10: RTM Timing 26
Figure 11: Timing Relationship Between ADC MUX, CE, and RTM Serial Transfer 26
Figure 12. Pulse Generator FIFO Timing 28
Figure 13: Accumulation Interval 29
Figure 14: Samples from Multiplexer Cycle (*MUX_DIV[3:0]* = 3) 30
Figure 15: Samples from Multiplexer Cycle (*MUX_DIV[3:0]* = 4) 30
Figure 16: Interrupt Structure 47
Figure 17: Automatic Temperature Compensation 54
Figure 18: Optical Interface 58
Figure 19: Optical Interface (UART1) 59
Figure 20: Connecting an External Load to DIO Pins 60
Figure 21: LCD Waveforms 68
Figure 22: 3-Wire Interface. Write Command, HiZ=0. 72
Figure 23: 3-Wire Interface. Write Command, HiZ=1 72
Figure 24: 3-Wire Interface. Read Command. 72
Figure 25: 3-Wire Interface. Write Command when CNT=0 73
Figure 26: 3-Wire Interface. Write Command when HiZ=1 and WFR=1. 73
Figure 27: SPI Slave Port - Typical Multi-Byte Read and Write Operations 75
Figure 28: Voltage, Current, Momentary and Accumulated Energy 80
Figure 29: Operation Modes State Diagram 81
Figure 30: MPU/CE Data Flow 91
Figure 31: Resistive Voltage Divider (Voltage Sensing) 92
Figure 32. CT with Single-Ended Input Connection (Current Sensing) 92
Figure 33: CT with Differential Input Connection (Current Sensing) 92
Figure 34: Differential Resistive Shunt Connections (Current Sensing) 92
Figure 35. 71M6541D/F/G with Local Sensors 93
Figure 36: 71M6541D/F/G with 71M6x01 isolated Sensor 94
Figure 37: 71M6542F/G with Local Sensors 95
Figure 38: 71M6542F/G with 71M6x01 Isolated Sensor 96
Figure 39: I^2C EEPROM Connection 100
Figure 40: Connections for UART0 101
Figure 41: Connection for Optical Components 102
Figure 42: External Components for the RESET Pin: Push-Button (Left), Production Circuit (Right) 102
Figure 43: External Components for the Emulator Interface 103
Figure 44: CE Data Flow: Multiplexer and ADC 137
Figure 45: CE Data Flow: Scaling, Gain Control, Intermediate Variables 137
Figure 46: CE Data Flow: Squaring and Summation Stages 138
Figure 47: 64-pin LQFP Package Outline 154
Figure 48: 100-pin LQFP Package Outline 155
Figure 49. Package Markings (Examples) 156
Figure 50: Pinout for the 71M6541D/F/G (LQFP-64 Package) 157
Figure 51: Pinout for the 71M6542F/G (LQFP-100 Package) 158
Figure 52: I/O Equivalent Circuits 163

Tables

Table 1. Required CE Code and Settings for Local Sensors 15
Table 2. Required CE Code and Settings for 71M6x01 Isolated Sensor 16
Table 3: ADC Input Configuration 17
Table 4: Multiplexer and ADC Configuration Bits 19
Table 5. *RCMD[4:0]* Bits 23
Table 6: Remote Interface Read Commands 23
Table 7: I/O RAM Control Bits for Isolated Sensor 23
Table 8: Inputs Selected in Multiplexer Cycles 25
Table 9: CKMPU Clock Frequencies 31
Table 10: Memory Map 32
Table 11: Internal Data Memory Map 33
Table 12: Special Function Register Map 33
Table 13: Generic 80515 SFRs - Location and Reset Values 34
Table 14: *PSW* Bit Functions (*SFR 0xD0*) 35
Table 15: Port Registers (SEGDIO0-15) 36
Table 16: Stretch Memory Cycle Width 36
Table 17: Baud Rate Generation 37
Table 18: UART Modes 37
Table 19: The *S0CON* (UART0) Register (SFR 0x98) 38
Table 20: The *S1CON* (UART1) Register (SFR 0x9B) 39
Table 21: *PCON* Register Bit Description (SFR 0x87) 39
Table 22: Timers/Counters Mode Description 40
Table 23: Allowed Timer/Counter Mode Combinations 40
Table 24: *TMOD* Register Bit Description (SFR 0x89) 40
Table 25: The *TCON* Register Bit Functions (SFR 0x88) 41
Table 26: The *IEN0* Bit Functions (SFR 0xA8) 42
Table 27: The *IEN1* Bit Functions (SFR 0xB8) 42
Table 28: The *IEN2* Bit Functions (SFR 0x9A) 42
Table 29: *TCON* Bit Functions (SFR 0x88) 42
Table 30: The *T2CON* Bit Functions (SFR 0xC8) 43
Table 31: The *IRCON* Bit Functions (SFR 0xC0) 43
Table 32: External MPU Interrupts 44
Table 33: Interrupt Enable and Flag Bits 45
Table 34: Interrupt Priority Level Groups 45
Table 35: Interrupt Priority Levels 45
Table 36: Interrupt Priority Registers (*IP0* and *IP1*) 46
Table 37: Interrupt Polling Sequence 46
Table 38: Interrupt Vectors 46
Table 39: Flash Memory Access 48
Table 40: Flash Security 49
Table 41: Clock System Summary 51
Table 42: RTC Control Registers 52
Table 43: I/O RAM Registers for RTC Temperature Compensation 53
Table 44: NV RAM Temperature Table Structure 54
Table 45: I/O RAM Registers for RTC Interrupts 55
Table 46: I/O RAM Registers for Temperature and Battery Measurement 56
Table 47: Selectable Resources using the *DIO_Rn[2:0]* Bits 60
Table 48: Data/Direction Registers for SEGDIO0 to SEGDIO14 (71M6541D/F/G) 61
Table 49: Data/Direction Registers for SEGDIO19 to SEGDIO27 (71M6541D/F/G) 62
Table 50: Data/Direction Registers for SEGDIO36-39 to SEGDIO44-45 (71M6541D/F/G) 62
Table 51: Data/Direction Registers for SEGDIO51 and SEGDIO55 (71M6541D/F/G) 62
Table 52: Data/Direction Registers for SEGDIO0 to SEGDIO15 (71M6542F/G) 63

Table 53: Data/Direction Registers for SEGDIO16 to SEGDIO31 (71M6542F/G) 64
Table 54: Data/Direction Registers for SEGDIO32 to SEGDIO45 (71M6542F/G) 64
Table 55: Data/Direction Registers for SEGDIO51 to SEGDIO55 (71M6542F/G) 64
Table 56: *LCD_VMODE[1:0]* Configurations 65
Table 57: LCD Configurations 67
Table 58: 71M6541D/F/G LCD Data Registers for SEG46 to SEG50 69
Table 59: 71M6542F/G LCD Data Registers for SEG46 to SEG50 70
Table 60: *EECTRL* Bits for 2-pin Interface 71
Table 61: *EECTRL* Bits for the 3-Wire Interface 71
Table 62: SPI Transaction Fields 74
Table 63: SPI Command Sequences 75
Table 64: SPI Registers 76
Table 65: *TMUX[5:0]* Selections 79
Table 66: *TMUX2[4:0]* Selections 79
Table 67: Available Circuit Functions 82
Table 68: *VSTAT[2:0] (SFR 0xF9[2:0])* 85
Table 69: Wake Enables and Flag Bits 88
Table 70: Wake Bits 89
Table 71: Clear Events for WAKE flags 90
Table 72: GAIN_ADJn Compensation Channels 98
Table 73: GAIN_ADJn Compensation Channels 100
Table 74: I/O RAM Map – Functional Order, Basic Configuration 105
Table 75: I/O RAM Map – Functional Order 107
Table 76: I/O RAM Map – Functional Order 111
Table 77. Standard CE Codes 126
Table 78: CE *EQU* Equations and Element Input Mapping 127
Table 79: CE Raw Data Access Locations 128
Table 80: *CESTATUS* Register 128
Table 81: *CESTATUS* (*CE RAM 0x80*) Bit Definitions 129
Table 82: *CECONFIG* Register 129
Table 83: *CECONFIG* (*CE RAM 0x20*) Bit Definitions 129
Table 84: Sag Threshold and Gain Adjust Control 130
Table 85: CE Transfer Variables (with Local Sensors) 131
Table 86: CE Transfer Variables (with Remote Sensor) 131
Table 87: CE Energy Measurement Variables (with Local Sensors) 132
Table 88: CE Energy Measurement Variables (with Remote Sensor) 132
Table 89: Other Transfer Variables 133
Table 90: CE Pulse Generation Parameters 134
Table 91: CE Parameters for Noise Suppression and Code Version 135
Table 92: CE Calibration Parameters 136
Table 93: Absolute Maximum Ratings 139
Table 94: Recommended External Components 140
Table 95: Recommended Operating Conditions 140
Table 96: Input Logic Levels 141
Table 97: Output Logic Levels 141
Table 98: Battery Monitor Performance Specifications (*TEMP_BAT*= 1) 142
Table 99. Temperature Monitor 142
Table 100: Supply Current Performance Specifications 143
Table 101: V3P3D Switch Performance Specifications 144
Table 102. Internal Power Fault Comparator Specifications 144
Table 103: 2.5 V Voltage Regulator Performance Specifications 144
Table 104: Low-Power Voltage Regulator Performance Specifications 145
Table 105: Crystal Oscillator Performance Specifications 145

Table 106: PLL Performance Specifications 145
Table 107: LCD Driver Performance Specifications 146
Table 108: LCD Driver Performance Specifications[1] 147
Table 109: VREF Performance Specifications 149
Table 110. ADC Converter Performance Specifications 150
Table 111: Pre-Amplifier Performance Specifications 151
Table 112: Flash Memory Timing Specifications 152
Table 113. SPI Slave Timing Specifications 152
Table 114: EEPROM Interface Timing 152
Table 115: RESET Pin Timing 153
Table 116: RTC Range for Date 153
Table 117. 71M6541 Package Markings 156
Table 118. 71M6542 Package Markings 156
Table 119: Power and Ground Pins 159
Table 120: Analog Pins 160
Table 121: Digital Pins 161
Table 122. Ordering Information 164

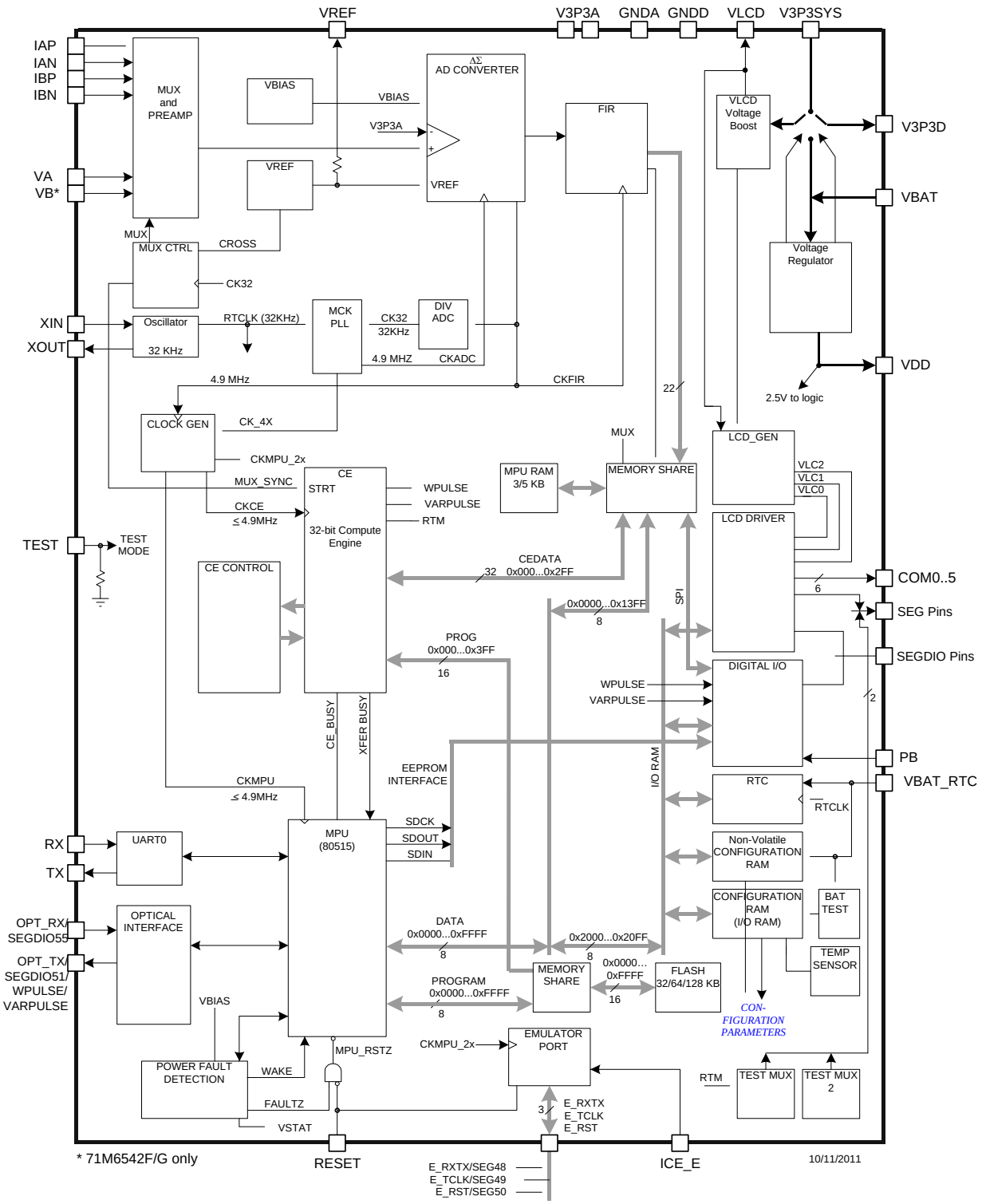

Figure 1: IC Functional Block Diagram

1 Introduction

This data sheet covers the 71M6541D (32KB), 71M6541F (64KB), 71M6541G (128KB), 71M6542F (64KB), and 71M6542G (128KB) fourth-generation energy measurement SoCs. The term “71M654x” is used when discussing a device feature or behavior that is applicable to all four part numbers. The appropriate part number is indicated when a device feature or behavior is being discussed that applies only to a specific part number. This data sheet also covers basic details about the companion 71M6x01 isolated current sensor device. For more complete information on the 71M6x01 sensors, refer to the 71M6xxx Data Sheet.

This document covers the use of the 71M654x with locally connected sensors as well when it is used in conjunction with the 71M6x01 isolated current sensor. The 71M654x and 71M6x01 chipset make it possible to use one non-isolated and one isolated shunt current sensor to create single-phase and two-phase energy meters using inexpensive shunt resistors, while achieving unprecedented performance with this type of sensor technology. The 71M654x SoCs also support configurations involving one locally connected shunt and one locally connected Current Transformer (CT), or two CTs.

To facilitate document navigation, hyperlinks are often used to reference figures, tables and section headings that are located in other parts of the document. All hyperlinks in this document are highlighted in blue. Hyperlinks are used extensively to increase the level of detail and clarity provided within each section by referencing other relevant parts of the document. To further facilitate document navigation, this document is published as a PDF document with bookmarks enabled.

The reader is also encouraged to obtain and review the documents listed in 8 Related Information on page 164 of this document.

2 Hardware Description

2.1 Hardware Overview

The 71M6541D/F/G and 71M6542F/G single-chip energy meter ICs integrate all primary functional blocks required to implement a solid-state residential electricity meter. Included on the chip are:

- An analog front end (AFE) featuring a 22-bit second-order sigma-delta ADC
- An independent 32-bit digital computation engine (CE) to implement DSP functions
- An 8051-compatible microprocessor (MPU) which executes one instruction per clock cycle (80515)
- A precision voltage reference (VREF)
- A temperature sensor for digital temperature compensation:
  - Metrology digital temperature compensation (MPU)
  - Automatic RTC digital temperature compensation operational in all power states
- LCD drivers
- RAM and Flash memory
- A real time clock (RTC)
- A variety of I/O pins
- A power failure interrupt
- A zero-crossing interrupt
- Selectable current sensor interfaces for locally-connected sensors as well as isolated sensors (i.e., using the 71M6x01 companion IC with a shunt resistor sensor)
- Resistive Shunt and Current Transformers are supported

Resistive Shunts and Current Transformers (CT) current sensors are supported. Resistive shunt current sensors may be connected directly to the 71M654x device or isolated using a companion 71M6x01 isolator IC in order to implement a variety of single-phase / split-phase (71M6541D/F) or two-phase (71M6542F/G) metering configurations. An inexpensive, small size pulse transformer is used to isolate the 71M6x01 isolated sensor from the 71M654x. The 71M654x performs digital communications bi-directionally with the 71M6x01 and also provides power to the 71M6x01 through the isolating pulse transformer. Isolated (remote) shunt current sensors are connected to the differential input of the 71M6x01. Included on the 71M6x01 companion isolator chip are:

- Digital isolation communications interface
- An analog front end (AFE)
- A precision voltage reference (VREF)
- A temperature sensor (for digital temperature compensation)
- A fully differential shunt resistor sensor input
- A pre-amplifier to optimize shunt current sensor performance
- Isolated power circuitry obtains dc power from pulses sent by the 71M654x

In a typical application, the 32-bit compute engine (CE) of the 71M654x sequentially processes the samples from the voltage inputs on analog input pins and from the external 71M6x01 isolated sensors and performs calculations to measure active energy (Wh) and reactive energy (VARh), as well as A^2h, and V^2h for four-quadrant metering. These measurements are then accessed by the MPU, processed further and output using the peripheral devices available to the MPU.

In addition to advanced measurement functions, the clock function allows the 71M6541D/F and 71M6542F/G to record time-of-use (TOU) metering information for multi-rate applications and to time-stamp tamper or other events. Measurements can be displayed on 3.3 V LCDs commonly used in low-temperature environments. An on-chip charge pump is available to drive 5 V LCDs. Flexible mapping of LCD display segments facilitate integration of existing custom LCDs. Design trade-off between the number of LCD segments and DIO pins can be implemented in software to accommodate various requirements.

In addition to the temperature-trimmed ultra-precision voltage reference, the on-chip digital temperature compensation mechanism includes a temperature sensor and associated controls for correction of unwanted temperature effects on measurement and RTC accuracy, e.g., to meet the requirements of ANSI and IEC standards. Temperature-dependent external components such as crystal oscillator, resistive shunts, current

transformers (CTs) and their corresponding signal conditioning circuits can be characterized and their correction factors can be programmed to produce electricity meters with exceptional accuracy over the industrial temperature range.

One of the two internal UARTs is adapted to support an Infrared LED with internal drive and sense configuration and can also function as a standard UART. The optical output can be modulated at 38 kHz. This flexibility makes it possible to implement AMR meters with an IR interface. A block diagram of the IC is shown in Figure 1.

2.2 Analog Front End (AFE)

The AFE functions as a data acquisition system, controlled by the MPU. When used with locally connected sensors, as seen in Figure 2, the analog input signals (IAP-IAN, VA and IBP-IBN) are multiplexed to the ADC input and sampled by the ADC. The ADC output is decimated by the FIR filter and stored in CE RAM where it can be accessed and processed by the CE.

See Figure 6 for the multiplexer sequence corresponding to Figure 2. See Figure 35 for the meter configuration corresponding to Figure 2.

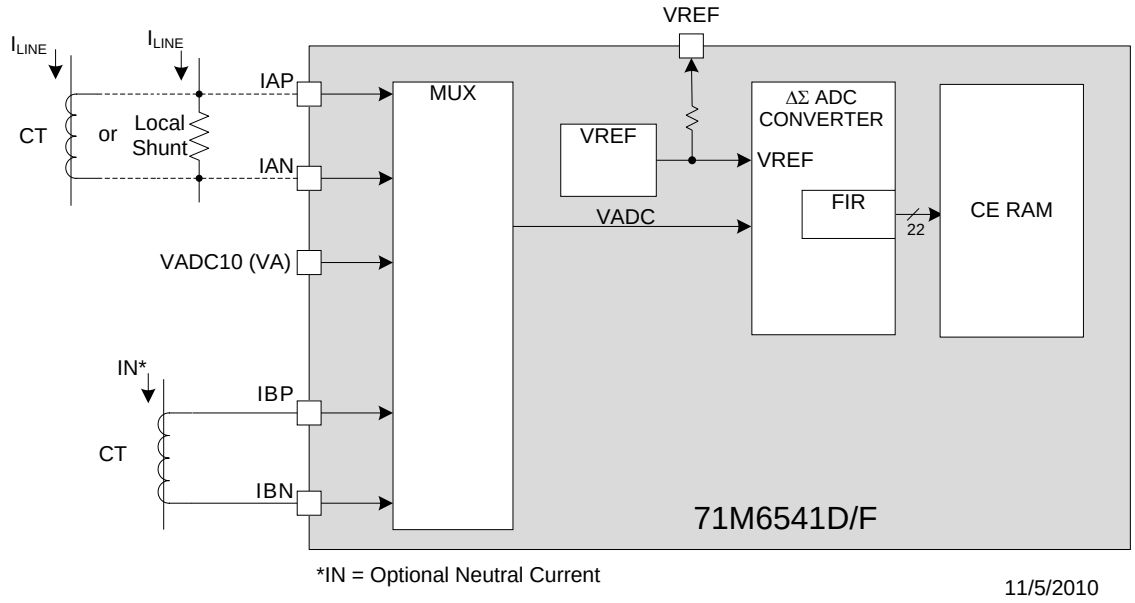

Figure 2. 71M6541D/F/G AFE Block Diagram (Local Sensors)

Figure 3 shows the 71M6541D/F/G multiplexer interface with one local and one remote resistive shunt sensor. As seen in Figure 3, when a remote isolated shunt sensor is connected via the 71M6x01, the samples associated with this current channel are not routed to the multiplexer, and are instead transferred digitally to the 71M6541D/F/G via the digital isolation interface and are directly stored in CE RAM.

See Figure 6 for the multiplexer timing sequence corresponding to Figure 3. See Figure 36 for the meter configurations corresponding to Figure 3.

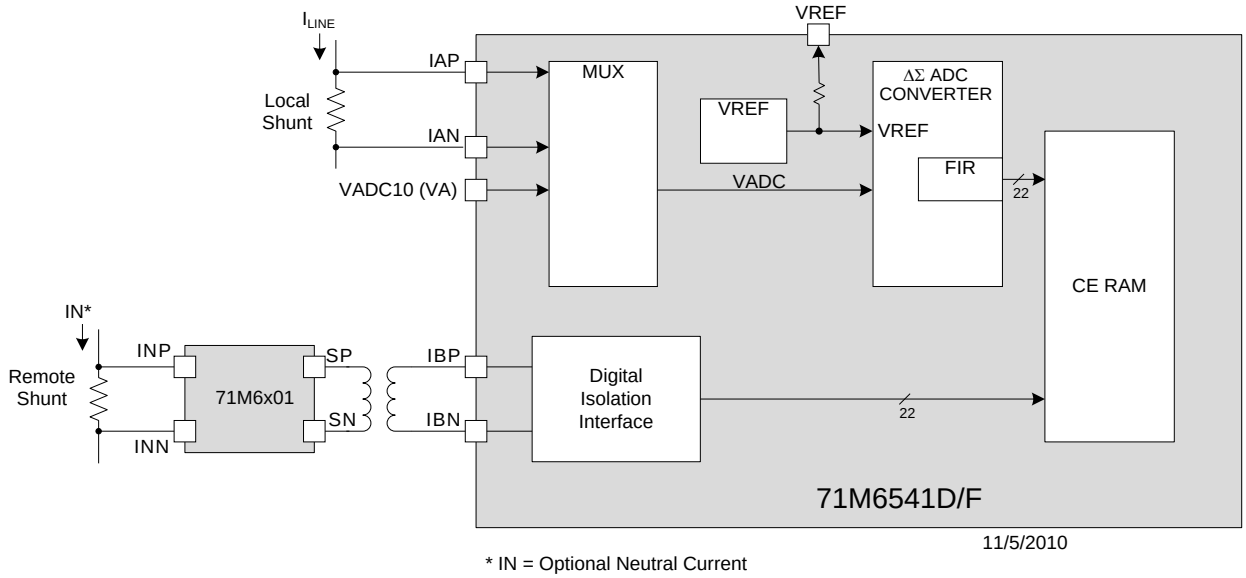

Figure 3. 71M6541D/F/G AFE Block Diagram with 71M6x01

Figure 4 shows the 71M6542F/G AFE with locally connected sensors. The analog input signals (IAP-IAN, VA, IBP-IBN and VB) are multiplexed to the ADC input and sampled by the ADC. The ADC output is decimated by the FIR filter and stored in CE RAM where it can be accessed and processed by the CE.

See Figure 7 for the multiplexer timing sequence corresponding to Figure 4. See Figure 37 for the meter configuration corresponding to Figure 4.

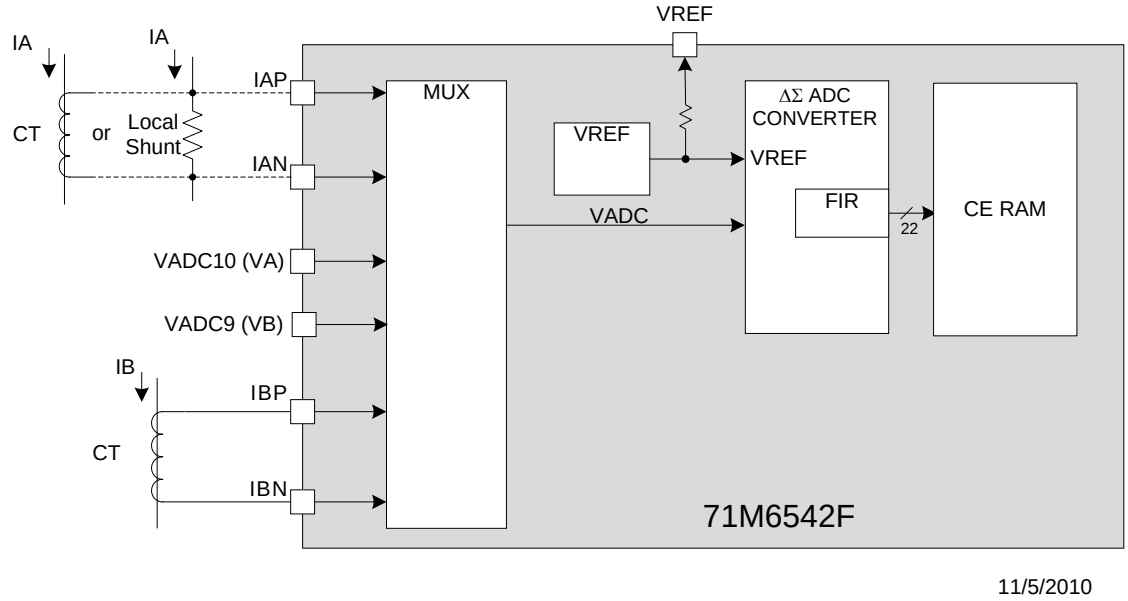

Figure 4. 71M6542F/G AFE Block Diagram (Local Sensors)

Figure 5 shows the 71M6542F/G multiplexer interface with one local and one remote resistive shunt sensor. As seen in Figure 5, when a remote isolated shunt sensor is connected via the 71M6x01, the samples associated with this current channel are not routed to the multiplexer, and are instead transferred digitally to the 71M6542F/G via the digital isolation interface and are directly stored in CE RAM.

See Figure 6 for the multiplexer timing sequence corresponding to Figure 5. See Figure 38 for the meter configurations corresponding to Figure 5.

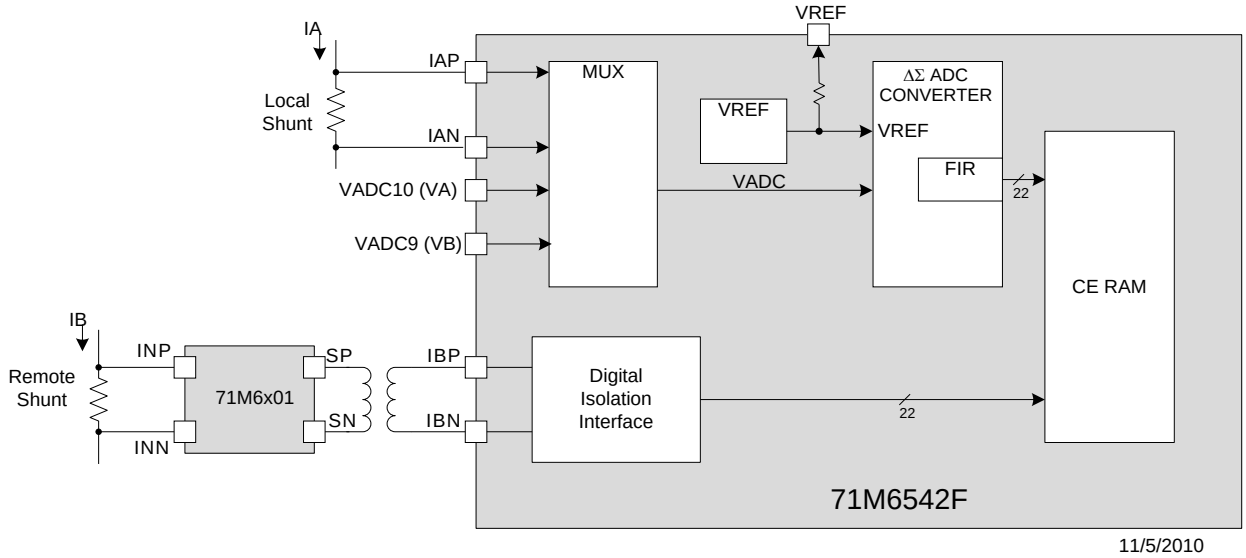

Figure 5. 71M6542F/G AFE Block Diagram with 71M6x01

2.2.1 Signal Input Pins

The 71M6541D/F/G features five ADC inputs. The 71M6542F/G features six ADC inputs.

IAP-IAN and IBP-IBN are intended for use as current sensor inputs. These four current sensor inputs can be configured as two single-ended inputs, or can be paired to form two differential inputs. For best performance, it is recommended to configure the current sensor inputs as differential inputs (i.e., IAP-IAN and IBP-IBN). The first differential input (IAP-IAN) features a pre-amplifier with a selectable gain of 1 or 8, and is intended for direct connection to a shunt resistor sensor, and can also be used with a Current Transformer (CT). The remaining differential pair (i.e., IBP-IBN) may be used with CTs, or may be enabled to interface to a remote 71M6x01 isolated current sensor providing isolation for a shunt resistor sensor using a low cost pulse transformer.

The remaining input in the 71M6541D/F (VA) is single-ended, and is intended for sensing the line voltage in a single-phase meter application using Equation 0 or 1 (see 2.3.4 Meter Equations on page 25). The 71M6542F/G features an additional single-ended voltage sensing input (VB) to support bi-phase applications using Equation 2. These single-ended inputs are referenced to the V3P3A pin.

All analog signal input pins measure voltage. In the case of shunt current sensors, currents are sensed as a voltage drop in the shunt resistor sensor. Referring to Figure 3, shunt sensors can be connected directly to the 71M654x (referred to as a 'local' shunt sensor) or connected via an isolated 71M6x01 (referred to as a 'remote' shunt sensor). In the case of Current Transformers (CT), the current is measured as a voltage across a burden resistor that is connected to the secondary winding of the CT. Meanwhile, line voltages are sensed through resistive voltage dividers. The VA and VB pins (VB is available in the 71M6542F/G only) are single-ended and their common return is the V3P3A pin.

Pins IAP-IAN can be programmed individually to be differential or single-ended as determined by the *DIFFA_E* (*I/O RAM 0x210C[4]*) control bit. However, for most applications, IAP-IAN are configured as a differential input to work with a shunt or CT directly interfaced to the IAP-IAN differential input with the appropriate external signal conditioning components (see 4.2 Direct Connection of Sensors on page 92).

The performance of the IAP-IAN pins can be enhanced by enabling a pre-amplifier with a fixed gain of 8, using the I/O RAM control bit *PRE_E (I/O RAM 0x2704[5])*. When *PRE_E* = 1, IAP-IAN become the inputs to the 8x pre-amplifier, and the output of this amplifier is supplied to the multiplexer. The 8x amplification is useful when current sensors with low sensitivity, such as shunt resistors, are used. With *PRE_E* set, the IAP-IAN input signal amplitude is restricted to 31.25 mV peak.

For the 71M654x application utilizing two shunt resistor sensors (Figure 3), the IAP-IAN pins are configured for differential mode to interface to a local shunt by setting the *DIFFA_E* control bit. Meanwhile, the IBP-IBN pins are re-configured as digital balanced pair to communicate with a 71M6x01 Isolated Sensor interface by setting the *RMT_E* control bit (*I/O RAM 0x2709[3]*). The 71M6x01 communicates with the 71M654x using a bi-directional digital data stream through an isolating low-cost pulse transformer. The 71M654x also supplies power to the 71M6x01 through the isolating transformer. This type of interface is further described at the end of this chapter (see 2.2.8 71M6x01 Isolated Sensor Interface (Remote Sensor Interface)).

For use with Current Transformers (CTs), as shown in Figure 2, the *RMT_E* control bit is reset, so that the IBP-IBN pins are configured as local analog inputs. The IAP-IAN pins cannot be configured as a remote sensor interface.

2.2.2 Input Multiplexer

When operating with local sensors, the input multiplexer sequentially applies the input signals from the analog input pins to the input of the ADC (see Figure 2 and Figure 4). One complete sampling sequence is called a multiplexer frame. The multiplexer of the 71M6541D/F can select up to three input signals (IAP-IAN, VA, and IBP-IBN) per multiplexer frame as controlled by the I/O RAM control field *MUX_DIV[3:0] (I/O RAM 0x2100[7:4])* (see Figure 6). The multiplexer of the 71M6542F/G adds the VB signal to achieve a total of four inputs (see Figure 7). The multiplexer always starts at state 1 and proceeds until as many states as determined by *MUX_DIV[3:0]* have been converted.

The 71M6541D/F/G and 71M6542F/G each require a unique CE code that is written for the specific application. Moreover, each CE code requires specific AFE and MUX settings in order to function properly. Table 1 provides the CE code and settings corresponding to the local sensor configurations shown in Figure 2 and Figure 4. Table 2 provides the CE code and settings corresponding to the local/remote sensor configuration utilizing the 71M6x01 as shown in Figure 3 and Figure 5.

Table 1. Required CE Code and Settings for Local Sensors

I/O RAM Mnemonic	I/O RAM Location	71M6541D/F/G (hex)	71M6542F/G (hex)	
			Eq. 0 or 1	Eq. 2
FIR_LEN[1:0]	210C[2:1]	1	1	2
ADC_DIV	2200[5]	1	1	0
PLL_FAST	2200[4]	1	1	1
MUX_DIV[3:0][1]	2100[7:4]	3	3	4
MUX0_SEL[3:0]	2105[3:0]	0	0	0
MUX1_SEL[3:0]	2105[7:4]	A	A	A
MUX2_SEL[3:0]	2104[3:0]	2	2	2
MUX3_SEL[3:0]	2104[7:4]	1	1	9
RMT_E	2709[3]	0	0	0
DIFFA_E	210C[4]	1	1	1
DIFFB_E	210C[5]	1	1	1
EQU[2:0]	2106[7:5]	0 or 1	0 or 1	2
CE Code	--	CE41A01	CE41A01	CE41A04
Equations	--	0 or 1	0 or 1	2
Current Sensor Types	--	1 Shunt and 1 CT or 2 CTs	1 Shunt and 1 CT or 2 CTs	1 Shunt and 1 CT or 2 CTs
Applicable Figure	--	Figure 2	Figure 4	Figure 4

Notes:

1. *MUX_DIV[3:0]* must be set to 0 while writing the other RAM locations in this table.

Maxim updates the CE code periodically. Contact your local Maxim representative to obtain the latest CE code and the associated settings. The configuration presented in this table is set by the MPU demonstration code during initialization.

Table 2. Required CE Code and Settings for 71M6x01 Isolated Sensor

I/O RAM Mnemonic	I/O RAM Location	71M6541D/F/G (hex)	71M6542F/G (hex)
FIR_LEN[1:0]	210C[2:1]	1	1
ADC_DIV	2200[5]	1	1
PLL_FAST	2200[4]	1	1
MUX_DIV[3:0][4]	2100[7:4]	3	3
MUX0_SEL[3:0]	2105[3:0]	0	0
MUX1_SEL[3:0]	2105[7:4]	A	A
MUX2_SEL[3:0][1]	2104[3:0]	1	9
MUX3_SEL[3:0][1]	2104[7:4]	1	1
RMT_E	2709[3]	1	1
DIFFA_E	210C[4]	1	1
DIFFB_E	210C[5]	0	0
EQU[2:0]	2106[7:5]	0 or 1	0, 1 or 2
CE Code	--	CE41B016201[2] CE41B016601[3]	
Equations	--	0, 1	0, 1 and 2
Current Sensor Type	--	1 Local Shunt and 1 Remote Shunt	1 Local Shunt and 1 Remote Shunt
Applicable Figure	--	Figure 3	Figure 5

Notes:

1. Although not used, set to 1 (the sample data is ignored by the CE)
2. 71M654x with 71M6201 remote sensor (200 Amps)
3. 71M654x with 71M6601 remote sensor (60 Amps)
4. *MUX_DIV[3:0]* must be set to 0 while writing the other RAM locations in this table.

Maxim updates the CE code periodically. Contact your local Maxim representative to obtain the latest CE code and the associated settings. The configuration presented in this table is set by the MPU demonstration code during initialization.

CAUTION

Using settings for the I/O RAM Mnemonics listed in Table 1 and Table 2 that do not match those required by the corresponding CE code being used results in undesirable side effects and must not be selected by the MPU. Consult your local Maxim representative to obtain the correct CE code and AFE / MUX settings corresponding to the application.

For a basic single-phase application, the IAP-IAN current input is configured for differential mode, whereas the VA pin is single-ended and is typically connected to the phase voltage via a resistor divider. The IBP-IBN differential input may be optionally used to sense the Neutral current. This configuration implies that the multiplexer applies a total of three inputs to the ADC. For this configuration, the multiplexer sequence is as shown in Figure 6. In this configuration IAP-IAN, IBP-IBN and VA are sampled, the extra conversion time slot (i.e., slot 2) is the optional Neutral current, and the physical current sensor for the Neutral current measurement may be omitted if not required.

For a standard single-phase application with tamper sensor in the neutral path, two current inputs can be configured for differential mode, using the pin pairs IAP-IAN and IBP-IBN. This means that the multiplexer applies a total of three inputs to the ADC. In this application, the system design may use two locally connected current sensors via IAP-IAN and IBP-IBN, as shown in Figure 2, and configured as differential inputs. Alternately, the IAP-IAN pin pair is configured as a differential input and connected to a local current shunt, and IBP-IBN is configured to connect to an isolated 71M6x01 isolated sensor (i.e., *RMT_E* = 1), as shown in Figure 3. The VA pin is typically connected to the phase voltage via resistor dividers. For this configuration, the multiplexer frame is also as shown in Figure 6 and time slot 2 is unused and ignored by the CE, as the samples corresponding to the remote sensor (IBP-IBN) do not pass through the multiplexer and are stored directly in CE RAM. The remote current sensor channel is sampled during the second half of the multiplexer frame and its timing relationship to the VA voltage is precisely known so that delay compensation can be properly applied.

The 71M6542F adds the ability to sample a second phase voltage (applied at the VB pin), which makes it suitable for meters with two voltage and two current sensors, such as meters implementing Equation 2 for dual-phase operation (P = VA*IA+VB*IB). Figure 7 shows the multiplexer sequence when four inputs are

processed with locally connected sensors, as shown in Figure 3. When using one local and one remote sensor (Figure 5), the multiplexer sequence is also as shown in Figure 7.

For both multiplexer sequences shown in Figure 6 and Figure 7, the frame duration is 13 CK32 cycles (where CK32 = 32768 Hz), therefore, the resulting sample rate is 32768 Hz / 13 = 2520.6 Hz.

Table 3 summarizes the various AFE input configurations.

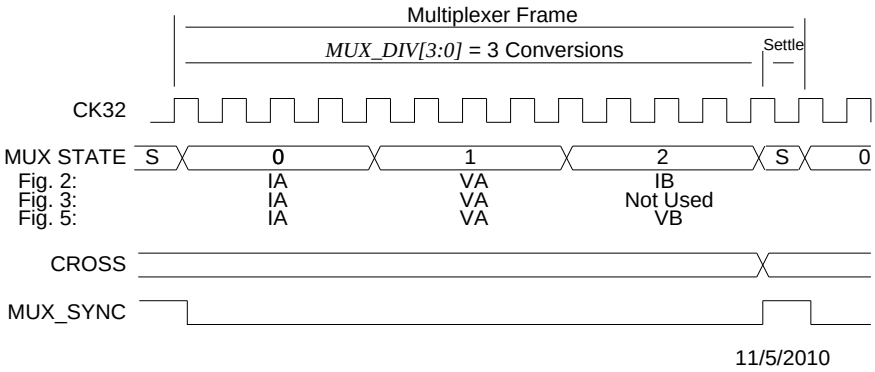

Figure 6: States in a Multiplexer Frame (*MUX_DIV[3:0]* = 3)

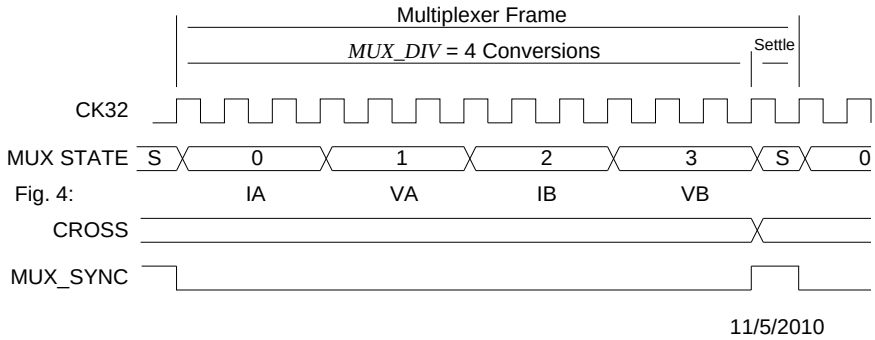

Figure 7: States in a Multiplexer Frame (*MUX_DIV[3:0]* = 4)

Table 3: ADC Input Configuration

Pin	ADC Channel	Required Setting	Comment
IAP	ADC0	*DIFFA_E* = 1	Differential mode must be selected with *DIFFA_E* = 1 (*I/O RAM 0x210C[4]*). The ADC results are stored in CE RAM location *ADC0* (*CE RAM 0x0*), and *ADC1* (*CE RAM 0x1*) is not disturbed.
IAN	ADC1		
IBP	ADC2	*DIFFB_E* = 1 or *RMT_E* = 1	For locally connected sensors (Figure 2 and Figure 4), the differential input must be enabled by setting *DIFFB_E (I/O RAM 0x210C[5]*. For the remote connected sensor (Figure 3 and Figure 5) with a remote shunt sensor, *RMT_E* (*I/O RAM 0x2709[3]*) must be set. In both cases, the ADC results are stored in RAM location *ADC2 (CE RAM 0x2)*, and *ADC3 (CE RAM 0x3)* is not disturbed.
IBN	ADC3		
VA	ADC10	--	Single-ended mode only. The ADC result is stored in RAM location *ADC10* (*CE RAM 0xA*).
VB	ADC9	--	Single-ended mode only (71M6542F only). The ADC result is stored in RAM location *ADC9* (*CE RAM 0x9*).

Multiplexer advance, FIR initiation and chopping of the ADC reference voltage (using the internal CROSS signal, see 2.2.7 Voltage References) are controlled by the internal MUX_CTRL circuit. Additionally, MUX_CTRL launches each pass of the CE through its code. Conceptually, MUX_CTRL is clocked by CK32, the 32768 Hz clock from the PLL block. The behavior of the MUX_CTRL circuit is governed by:

- *CHOP_E[1:0]* (*I/O RAM 0x2106[3:2]*)
- *MUX_DIV[3:0]* (*I/O RAM 0x2100[7:4]*)
- *FIR_LEN[1:0]* (*I/O RAM 0x210C[2:1]*)
- *ADC_DIV* (*I/O RAM 0x2200[5]*)

The duration of each multiplexer state depends on the number of ADC samples processed by the FIR as determined by the *FIR_LEN[1:0] (I/O RAM 0x210C[2:1]* control field. Each multiplexer state starts on the rising edge of CK32, the 32-kHz clock.

It is required that *MUX_DIV[3:0] (I/O RAM 0x2100[7:4])* be set to zero while changing the ADC configuration to minimize system transients. After all configuration bits are set, *MUX_DIV[3:0]* should be set to the required value.

Additionally, the ADC can be configured to operate at one-half rate (32768*75=2.46MHz). In this mode, the bias current to the ADC amplifiers is reduced and overall system power is reduced. The *ADC_DIV (I/O RAM 0x2200[5])* bit selects full speed or half speed. At half speed, if *FIR_LEN[1:0]* is set to 01 (288), each conversion requires 4 XTAL cycles, resulting in a 2520Hz sample rate when *MUX_DIV[3:0]* = 3. Note that in order to work with these power-reducing settings, a corresponding CE code is required.

The duration of each time slot in CK32 cycles depends on *FIR_LEN[1:0]*, *ADC_DIV* and *PLL_FAST*:

Time_Slot_Duration (*PLL_FAST* = 1) = (*FIR_LEN[1:0]*+1) * (*ADC_DIV*+1)

Time_Slot_Duration (*PLL_FAST* = 0) = 3*(*FIR_LEN[1:0]*+1) * (*ADC_DIV*+1)

The duration of a multiplexer frame in CK32 cycles is:

MUX_Frame_Duration = 3-2**PLL_FAST* + Time_Slot_Duration * *MUX_DIV[3:0]*

The duration of a multiplexer frame in CK_FIR cycles is:

MUX frame duration (CK_FIR cycles) =

[3-2**PLL_FAST* + Time_Slot_Duration * *MUX_DIV*] * (48+*PLL_FAST**102)

The ADC conversion sequence is programmable through the *MUXx_SEL* control fields (*I/O RAM 0x2100* to *0x2105*). As stated above, there are three ADC time slots in the 71M6541D/F/G and four ADC time slots in the 71M6542F/G, as set by *MUX_DIV[3:0]* (*I/O RAM 0x2100[7:4]*). In the expression *MUXx_SEL[3:0]* = n, '*x*' refers to the multiplexer frame time slot number and n refers to the desired ADC input number or ADC handle (i.e., ADC0 to ADC10, or simply 0 to 10 decimal). Thus, there are a total of 11 valid ADC handles in the 71M654x devices. For example, if *MUX0_SEL[3:0]* = 0, then ADC0, corresponding to the sample from the IAP-IAN input (configured as a differential input), is positioned in the multiplexer frame during time slot 0. See Table 1 and Table 2 for the appropriate *MUXx_SEL[3:0]* settings and other settings applicable to a particular CE code.

Note that when the remote sensor interface is enabled, and even though the samples corresponding to the remote sensor current (IBP-IBN) do not pass through the multiplexer, the *MUX2_SEL[3:0]* and *MUX3_SEL[3:0]* control fields must be written with a valid ADC handle that is not being used. Typically, ADC1 is used for this purpose (see Table 2). In this manner, the ADC1 handle, which is not used in the 71M6541D/F/G or 71M6542F/G, is used as a place holder in the multiplexer frame, in order to generate the correct multiplexer frame sequence and the correct sample rate. The resulting sample data stored in *CE RAM 0x1* is undefined and is ignored by the CE code. Meanwhile, the digital isolation interface takes care of automatically storing the samples for the remote interface current (IBP-IBN) in *CE RAM 0x2*.

✓ Delay compensation and other functions in the CE code require the settings for *MUX_DIV[3:0]*, *MUXx_SEL[3:0]*, *RMT_E*, *FIR_LEN[1:0]*, *ADC_DIV* and *PLL_FAST* to be fixed for a given CE code. Refer to Table 1 and Table 2 for the settings that are applicable to the 71M6541D/F/G and 71M6542F/G.

Table 4 summarizes the I/O RAM registers used for configuring the multiplexer, signals pins, and ADC. All listed registers are 0 after reset and wake from battery modes, and are readable and writable.

Table 4: Multiplexer and ADC Configuration Bits

Name	Location	Description
MUX0_SEL[3:0]	2105[3:0]	Selects the ADC input converted during time slot 0.
MUX1_SEL[3:0]	2105[7:4]	Selects the ADC input converted during time slot 1.
MUX2_SEL[3:0]	2104[3:0]	Selects the ADC input converted during time slot 2.
MUX3_SEL[3:0]	2104[7:4]	Selects the ADC input converted during time slot 3.
MUX4_SEL[3:0]	2103[3:0]	Selects the ADC input converted during time slot 4.
MUX5_SEL[3:0]	2103[7:4]	Selects the ADC input converted during time slot 5.
MUX6_SEL[3:0]	2102[3:0]	Selects the ADC input converted during time slot 6.
MUX7_SEL[3:0]	2102[7:0]	Selects the ADC input converted during time slot 7.
MUX8_SEL[3:0]	2101[3:0]	Selects the ADC input converted during time slot 8.
MUX9_SEL[3:0]	2101[7:0]	Selects the ADC input converted during time slot 9.
MUX10_SEL[3:0]	2100[3:0]	Selects the ADC input converted during time slot 10.
ADC_DIV	2200[5]	Controls the rate of the ADC and FIR clocks.
MUX_DIV[3:0]	2100[7:4]	The number of ADC time slots in each multiplexer frame (maximum = 11).
PLL_FAST	2200[4]	Controls the speed of the PLL and MCK.
FIR_LEN[1:0]	210C[1]	Determines the number of ADC cycles in the ADC decimation FIR filter.
DIFFA_E	210C[4]	Enables the differential configuration for analog input pins IAP-IAN.
DIFFB_E	210C[5]	Enables the differential configuration for analog input pins IBP-IBN.
RMT_E	2709[3]	Enables the remote sensor interface transforming pins IBP-IBN into a digital balanced differential pair for communications with the 71M6x01 sensor.
PRE_E	2704[5]	Enables the 8x pre-amplifier.
Refer to Table 76 starting on page 111 for more complete details about these I/O RAM locations.		

2.2.3 Delay Compensation

When measuring the energy of a phase (i.e., Wh and VARh) in a service, the voltage and current for that phase must be sampled at the same instant. Otherwise, the phase difference, Φ, introduces errors.

$$\phi = \frac{t_{delay}}{T} \cdot 360^o = t_{delay} \cdot f \cdot 360^o$$

Where *f* is the frequency of the input signal, T = 1/f and t_{delay} is the sampling delay between current and voltage.

Traditionally, sampling is accomplished by using two A/D converters per phase (one for voltage and the other one for current) controlled to sample simultaneously. Maxim's Single-Converter Technology, however, exploits the 32-bit signal processing capability of its CE to implement "constant delay" all-pass filters. The all-pass filter corrects for the conversion time difference between the voltage and the corresponding current samples that are obtained with a single multiplexed A/D converter.

The "constant delay" all-pass filter provides a broad-band delay $360^o - \theta$, which is precisely matched to the difference in sample time between the voltage and the current of a given phase. This digital filter does not affect the amplitude of the signal, but provides a precisely controlled phase response.

The recommended ADC multiplexer sequence samples the current first, immediately followed by sampling of the corresponding phase voltage, thus the voltage is delayed by a phase angle Φ relative to

the current. The delay compensation implemented in the CE aligns the voltage samples with their corresponding current samples by first delaying the current samples by one full sample interval (i.e., 360°), then routing the voltage samples through the all-pass filter, thus delaying the voltage samples by 360° - θ, resulting in the residual phase error between the current and its corresponding voltage of θ – Φ. The residual phase error is negligible, and is typically less than ±1.5 milli-degrees at 100Hz, thus it does not contribute to errors in the energy measurements.

When using remote sensors, the CE performs the same delay compensation described above to align each voltage sample with its corresponding current sample. Even though the remote current samples do not pass through the 71M654x multiplexer, their timing relationship to their corresponding voltages is fixed and precisely known, provided that the *MUXn_SEL[3:0]* slot assignment fields are programmed as shown in Table 1 and Table 2.

2.2.4 ADC Pre-Amplifier

The ADC pre-amplifier is a low-noise differential amplifier with a fixed gain of 8 available only on the IAP-IAN sensor input pins. A gain of 8 is enabled by setting *PRE_E* = 1 (*I/O RAM 0x2704[5]*). When disabled, the supply current of the pre-amplifier is <10 nA and the gain is unity. With proper settings of the *PRE_E* and *DIFFA_E* (*I/O RAM 0x210C[4]*) bits, the pre-amplifier can be used whether differential mode is selected or not. For best performance, the differential mode is recommended. In order to save power, the bias current of the pre-amplifier and ADC is adjusted according to the *ADC_DIV* control bit (*I/O RAM 0x2200[5]*).

2.2.5 A/D Converter (ADC)

A single 2nd order delta-sigma A/D converter digitizes the voltage and current inputs to the device. The resolution of the ADC, including the sign bit, is 21 bits (*FIR_LEN[1:0]* = 1, *I/O RAM 0x210C[2:1]*), or 22 bits (*FIR_LEN[1:0]* = 2). The ADC is clocked by CKADC.

Initiation of each ADC conversion is controlled by MUX_CTRL internal circuit as described above. At the end of each ADC conversion, the FIR filter output data is stored into the CE RAM location determined by the multiplexer selection. FIR data is stored LSB justified, but shifted left 9 bits.

2.2.6 FIR Filter

The finite impulse response filter is an integral part of the ADC and it is optimized for use with the multiplexer. The purpose of the FIR filter is to decimate the ADC output to the desired resolution. At the end of each ADC conversion, the output data is stored into the fixed CE RAM location determined by the multiplexer selection as shown in Table 1 and Table 2.

2.2.7 Voltage References

A bandgap circuit provides the reference voltage to the ADC. The amplifier within the reference is chopper stabilized, i.e., the chopper circuit can be enabled or disabled by the MPU using the I/O RAM control field *CHOP_E[1:0] (I/O RAM 0x2106[3:2])*. The two bits in the *CHOP_E[1:0]* field enable the MPU to operate the chopper circuit in regular or inverted operation, or in toggling modes (recommended). When the chopper circuit is toggled in between multiplexer cycles, dc offsets on VREF are automatically be averaged out, therefore the chopper circuit should always be configured for one of the toggling modes.

Since the VREF band-gap amplifier is chopper-stabilized, the dc offset voltage, which is the most significant long-term drift mechanism in the voltage references (VREF), is automatically removed by the chopper circuit. Both the 71M654x and the 71M6x01 feature chopper circuits for their respective VREF voltage reference.

The general topology of a chopped amplifier is shown in Figure 8. The CROSS signal is an internal on-chip signal and is not accessible on any pin or register.

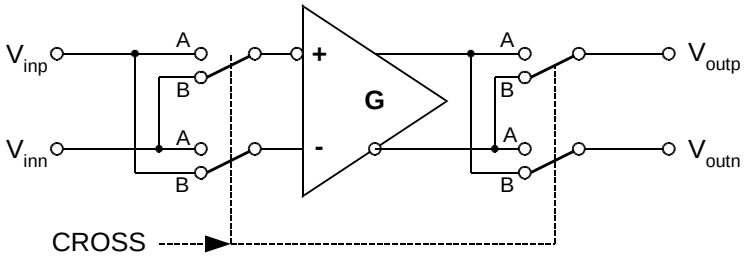

Figure 8: General Topology of a Chopped Amplifier

It is assumed that an offset voltage Voff appears at the positive amplifier input. With all switches, as controlled by CROSS (an internal signal), in the A position, the output voltage is:

Voutp – Voutn = G (Vinp + Voff – Vinn) = G (Vinp – Vinn) + G Voff

With all switches set to the B position by applying the inverted CROSS signal, the output voltage is:

Voutn – Voutp = G (Vinn – Vinp + Voff) = G (Vinn – Vinp) + G Voff, or
Voutp – Voutn = G (Vinp – Vinn) - G Voff

Thus, when CROSS is toggled, e.g., after each multiplexer cycle, the offset alternately appears on the output as positive and negative, which results in the offset effectively being eliminated, regardless of its polarity or magnitude.

When CROSS is high, the connection of the amplifier input devices is reversed. This preserves the overall polarity of that amplifier gain; it inverts its input offset. By alternately reversing the connection, the amplifier's offset is averaged to zero. This removes the most significant long-term drift mechanism in the voltage reference. The *CHOP_E[1:0]* (*I/O RAM 0x2106[3:2]*) control field controls the behavior of CROSS. The CROSS signal reverses the amplifier connection in the voltage reference in order to negate the effects of its offset. On the first CK32 rising edge after the last multiplexer state of its sequence, the multiplexer waits one additional CK32 cycle before beginning a new frame. At the beginning of this cycle, the value of CROSS is updated according to the *CHOP_E[1:0]* field. The extra CK32 cycle allows time for the chopped VREF to settle. During this cycle, MUXSYNC is held high. The leading edge of MUXSYNC initiates a pass through the CE program sequence. The beginning of the sequence is the serial readout of the four RTM words.

CHOP_E[1:0] has four states: positive, reverse, and two toggle states. In the positive state, *CHOP_E[1:0]* = 01, CROSS is held low. In the reverse state, *CHOP_E[1:0]* = 10, CROSS is held high.

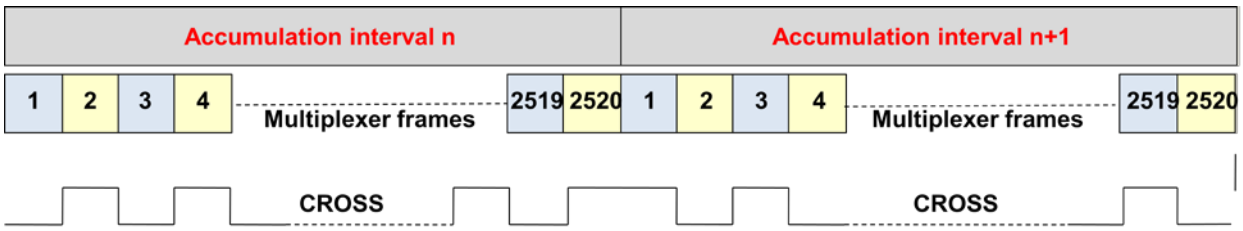

Figure 9: CROSS Signal with *CHOP_E* = 00

Figure 9 shows CROSS over two accumulation intervals when *CHOP_E[1:0]* = 00: At the end of the first interval, CROSS is high, at the end of the second interval, CROSS is low. Operation with *CHOP_E[1:0]* = 00 does not require control of the chopping mechanism by the MPU.

In the second toggle state, *CHOP_E[1:0]* = 11, CROSS does not toggle at the end of the last multiplexer cycle in an accumulation interval.

A second, low-power voltage reference is used in the LCD system and for the comparators that support transitions to and from the battery modes.

2.2.8 71M6x01 Isolated Sensor Interface (Remote Sensor Interface)

2.2.8.1 General Description

Non-isolating sensors, such as shunt resistors, can be connected to the inputs of the 71M654x via a combination of a pulse transformer and a 71M6x01 IC (a top-level block diagram of this sensor interface is shown in Figure 36). The 71M6x01 receives power directly from the 71M654x via a pulse transformer and does not require a dedicated power supply circuit. The 71M6x01 establishes 2-way communication with the 71M654x, supplying current samples and auxiliary information such as sensor temperature via a serial data stream.

One 71M6x01 Isolated Sensor can be supported by the 71M6541D/F/G and 71M6542F/G. When remote interface IBP-IBN is enabled, the two analog current inputs pins IBP and IBN become a digital balanced differential interface to the remote sensor. See Table 3 for details.

Each 71M6x01 Isolated Sensor consists of the following building blocks:

- Power supply for power pulses received from the 71M654x
- Digital communications interface
- Shunt signal pre-amplifier
- Delta-Sigma ADC Converter with precision bandgap reference (chopping amplifier)
- Temperature sensor
- Fuse system containing part-specific information

During an ordinary multiplexer cycle, the 71M654x internally determines which other channels are enabled with *MUX_DIV[3:0] (I/O RAM 0x2100[7:4])*. At the same time, it decimates the modulator output from the 71M6x01 Isolated Sensors. Each result is written to CE RAM during one of its CE access time slots. See Table 3 for the CE RAM locations of the sampled signals.

2.2.8.2 Communication between 71M654x and 71M6x01 Isolated Sensor

The ADC of the 71M6x01 derives its timing from the power pulses generated by the 71M654x and as a result, operates its ADC slaved to the frequency of the power pulses. The generation of power pulses, as well as the communication protocol between the 71M654x and 71M6x01 Isolated Sensor is automatic and transparent to the user. Details are not covered in this data sheet.

2.2.8.3 Control of the 71M6x01 Isolated Sensor

The 71M654x can read or write certain types of information from each 71M6x01 isolated sensor.

The data to be read is selected by a combination of the *RCMD[4:0]* and *TMUXRn[2:0]*. To perform a read transaction from one of the 71M6x01 devices, the MPU first writes the *TMUXRn[2:0]* field (where n = 2, 4, 6, located at *I/O RAM 0x270A[2:0], 0x270A[6:4]* and *0x2709[2:0],* respectively). Next, the MPU writes *RCMD[4:0]* (*SFR 0xFC[4:0]*) with the desired command and phase selection. When the *RCMD[4:2]* bits have cleared to zero, the transaction has been completed and the requested data is available in *RMT_RD[15:0]* (*I/O RAM 0x2602[7:0]* is the MSB and *0x2603[7:0]* is the LSB). The read parity error bit, *PERR_RD (SFR 0xFC[6])* is also updated during the transaction. If the MPU writes to *RCMD[4:0]* before a previously initiated read transaction is completed, the command is ignored. Therefore, the MPU must wait for *RCMD[4:2]*=0 before proceeding to issue the next remote sensor read command.

The *RCMD[4:0]* field is divided into two sub-fields, *COMMAND=RCMD[4:2]* and *PHASE=RCMD[1:0]*, as shown in Table 5.

Table 5. *RCMD[4:0]* Bits

Command *RCMD[4:2]*		**Phase Selector** *RCMD[1:0]*		**Associated** *TMUXRn* **Control Field**
000	Invalid	00	Invalid	---
001	Command 1	01	IBP-IBN	*TMUXRB [2:0]*
010	Command 2			
011	Reserved			
100	Reserved			
101	Invalid			
110	Reserved			
111	Reserved			

Notes:

1. Only two codes of *RCMD[4:2]* (*SFR 0xFC[4:2]*) are relevant for normal operation. These are *RCMD[4:2]* = 001 and 010. Codes 000 and 101 are invalid and will be ignored if used. The remaining codes are reserved and must not be used.
2. For the *RCMD[1:0]* control field, codes 01, 10 and 11 are valid and 00 is invalid and must not be used.

Table 6 shows the allowable combinations of values in *RCMD[4:2]* and *TMUXRn[2:0]*, and the corresponding data type and format sent back by the 71M6x01 isolated sensor and how the data is stored in *RMT_RD[15:8]* and *RMT_RD[7:0]*. The MPU selects which of the three phases is read by asserting the proper code in the *RCMD[1:0]* field, as shown in Table 5.

Table 6: Remote Interface Read Commands

RCMD[4:2]	***TMUXRn[2:0]***	**Read Operation**	***RMT_RD* [15:8]**	***RMT_RD* [7:0]**
001	00X	*TRIMT[7:0]* (trim fuse for all 71M6x01)	*TRIMT[7]=RMT_RD[8]*	*TRIMT[6:0]=RMT_RD[7:1]*
010	00X	*STEMP[10:0]* (sensed 71M6x01 temperature)	*STEMP[10:8]=RMT_RD[10:8]* *(RMT_RD[15:11] are sign extended)*	*STEMP[7:0]*
010	01X	*VSENSE[7:0]* (sensed 71M6x01 supply voltage)	*All zeros*	*VSENSE[7:0]*
010	10X	*VERSION[7:0]* (chip version)	*VERSION[7:0]*	*All zeros*

Notes:

1. *TRIMT[7:0]* is the VREF trim value for all 71M6x01 devices. Note that the *TRIMT[7:0]* 8-bit value is formed by *RMT_RD[8]* and *RMT_RD[7:1]*. See the 71M6xxx Data sheet for more information on *TRIMT[7:0]*
2. See the *71M6xxx Data Sheet* for the equation to calculate temperature from the *STEMP[7:0]* value read from the 71M6x01.
3. See the *71M6xxx Data Sheet* for the equation to calculate temperature from the *VSENSE[7:0]* value read from the 71M6x01.

With hardware and trim-related information on each connected 71M6x01 Isolated Sensor available to the 71M6541D/F/G, the MPU can implement temperature compensation of the energy measurement based on the individual temperature characteristics of the 71M6x01 Isolated Sensor. See 4.7 Metrology Temperature Compensation on page 97 for details.

Table 7 shows all I/O RAM registers used for control of the external 71M6x01 Isolated Sensors. See the 71M6xxx Data Sheet for additional details.

Table 7: I/O RAM Control Bits for Isolated Sensor

Name	**Address**	**RST Default**	**WAKE Default**	**R/W**	**Description**
RCMD[4:0]	SFR FC[4:0]	0	0	R/W	When the MPU writes a non-zero value to *RCMD*, the 71M654x issues a command to the cor-responding isolated sensor selected with *RCMD[1:0]*. When the command is complete, the 71M654x clears *RCMD[4:2]*. The command code

Name	Address	RST Default	WAKE Default	R/W	Description
					itself is in *RCMD[4:2]*.
PERR_RD *PERR_WR*	SFR FC[6] SFR FC[5]	0	0	R/W	The 71M654x sets these bits to indicate that a parity error on the isolated sensor has been detected. Once set, the bits are remembered until they are cleared by the MPU.
CHOPR[1:0]	2709[7:6]	00	00	R/W	The CHOP settings for the isolated sensors. 00 – Auto chop. Change every multiplexer frame. 01 – Positive 10 – Negative 11 – Same as 00
TMUXRB[2:0]	270A[2:0]	000	000	R/W	The TMUX bits for control of the isolated sensor.
RMT_RD[15:8] *RMT_RD[7:0]*	2602[7:0] 2603[7:0]	0	0	R	The read buffer for 71M6x01 read operations.
RFLY_DIS	210C[3]	0	0	R/W	Controls how the 71M654x drives the 71M6x01 power pulse. When set, the power pulse is driven high and low. When cleared, it is driven high followed by an open circuit flyback interval.
RMT_E	2709[3]	0	0	R/W	Enables the isolated remote sensor interface and re-configures pins IBP-IBN as a balanced pair digital remote interface.
Refer to Table 76 starting on page 111 for more complete details about these I/O RAM locations.					

2.3 Digital Computation Engine (CE)

The CE, a dedicated 32-bit signal processor, performs the precision computations necessary to accurately measure energy. The CE calculations and processes include:

- Multiplication of each current sample with its associated voltage sample to obtain the energy per sample (when multiplied with the constant sample time).
- Frequency-insensitive delay cancellation on all four channels (to compensate for the delay between samples caused by the multiplexing scheme).
- 90° phase shifter (for VAR calculations).
- Pulse generation.
- Monitoring of the input signal frequency (for frequency and phase information).
- Monitoring of the input signal amplitude (for sag detection).
- Scaling of the processed samples based on calibration coefficients.
- Scaling of samples based on temperature compensation information.

2.3.1 CE Program Memory

The CE program resides in flash memory. Common access to flash memory by the CE and MPU is controlled by a memory share circuit. Each CE instruction word is two bytes long. Allocated flash space for the CE program cannot exceed 4096 16-bit words (8 KB). The CE program counter begins a pass through the CE code each time multiplexer state 0 begins. The code pass ends when a HALT instruction is executed. For proper operation, the code pass must be completed before the multiplexer cycle ends.

The CE program must begin on a 1 KB boundary of the flash address. The I/O RAM control field *CE_LCTN[5:0]* (*I/O RAM 0x2109[5:0]*) defines which 1 KB boundary contains the CE code. Thus, the first CE instruction is located at 1024**CE_LCTN[5:0]*.

2.3.2 CE Data Memory

The CE and MPU share data memory (RAM). Common access to XRAM by the CE and MPU is controlled by a memory share circuit. The CE can access up to 3 KB of the 3 KB data RAM (XRAM), i.e., from RAM address 0x0000 to 0x0C00.

The XRAM can be accessed by the FIR filter block, the RTM circuit, the CE, and the MPU. Assigned time slots are reserved for FIR and MPU, respectively, to prevent bus contention for XRAM data access by the CE.

The MPU reads and writes the XRAM shared between the CE and MPU as the primary means of data communication between the two processors.

Table 3 shows the CE addresses in XRAM allocated to analog inputs from the AFE.

The CE is aided by support hardware to facilitate implementation of equations, pulse counters, and accumulators. This hardware is controlled through the I/O RAM control field *EQU[2:0]*, equation assist (*I/O RAM 0x2106[7:5]*), bit *DIO_PV (I/O RAM 0x2457[6])*, bit *DIO_PW*, pulse count assist (*I/O RAM 0x2457[7]*), and SUM_*SAMPS[12:0]*, accumulation assist (*I/O RAM 0x2107[4:0] and 0x2108[7:0]*).

SUM_SAMPS[12:0] supports an accumulation scheme where the incremental energy values from up to *SUM_SAMPS[12:0]* multiplexer frames are added up over one accumulation interval. The integration time for each energy output is, for example, *SUM_SAMPS[12:0]*/2520.6 (with *MUX_DIV[3:0]* = 011, *I/O RAM 0x2100[7:4]* and *FIR_LEN[1:0]* = 10, *I/O RAM 0x210C[2:1]*). CE hardware issues the XFER_BUSY interrupt when the accumulation is complete.

2.3.3 CE Communication with the MPU

The CE outputs six signals to the MPU: CE_BUSY, XFER_BUSY, XPULSE, YPULSE, WPULSE and VPULSE. These are connected to the MPU interrupt service. CE_BUSY indicates that the CE is actively processing data. This signal occurs once every multiplexer frame. XFER_BUSY indicates that the CE is updating to the output region of the CE RAM, which occurs whenever an accumulation cycle has been completed. Both, CE_BUSY and XFER_BUSY are cleared when the CE executes a HALT instruction.

XPULSE, YPULSE, VPULSE, and WPULSE can be configured to interrupt the MPU and indicate zero crossings of the mains voltage, sag failures, or other significant events. Additionally, these signals can be connected directly to DIO pins to provide direct outputs for the CE. Interrupts associated with these signals always occur on the leading edge (see “External” interrupt source No. 2 in Figure 16).

2.3.4 Meter Equations

The 71M6541D/F/G and 71M6542F/G provide hardware assistance to the CE in order to support various meter equations. This assistance is controlled through I/O RAM register *EQU[2:0]* (equation assist). The Compute Engine (CE) firmware for industrial configurations can implement the equations listed in Table 8. *EQU*[2:0] specifies the equation to be used based on the meter configuration and on the number of phases used for metering.

Table 8: Inputs Selected in Multiplexer Cycles

EQU	Description	Wh and VARh formula			Recommended Multiplexer Sequence
		Element 0	Element 1	Element 2	
0	1-element, 2-W, 1ϕ with neutral current sense	VA · IA	VA · IB[1]	N/A	IA VA IB[1]
1	1-element, 3-W, 1ϕ	VA(IA-IB)/2	N/A	N/A	IA VA IB
2 †	2-element, 3-W, 3ϕ Delta	VA · IA	VB · IB	N/A	IA VA IB VB

Note:
1. Optionally, IB may be used to measure neutral current

† 71M6542F/G only

2.3.5 Real-Time Monitor (RTM)

The CE contains a Real-Time Monitor (RTM), which can be programmed to monitor four selectable XRAM locations at full sample rate. The four monitored locations, as selected by the I/O RAM registers *RTM0[9:8], RTM0[7:0], RTM1[9:8], RTM1[7:0], RTM2[9:8], RTM2[7:0], RTM3[9:8],* and *RTM3[7:0]*, are serially output to the TMUXOUT pin via the digital output multiplexer at the beginning of each CE code pass. The RTM can be enabled and disabled with control bit *RTM_E (I/O RAM 0x2106[1]).* The RTM output is clocked by CKTEST. Each RTM word is clocked out in 35 CKCE cycles (1 CKCE cycle is

equivalent to 203 ns) and contains a leading flag bit. See Figure 10 for the RTM output format. RTM is low when not in use.

Figure 11 summarizes the timing relationships between the input MUX states, the CE_BUSY signal, and the RTM serial output stream. In this example, *MUX_DIV[3:0]* = 4 *(I/O RAM 0x2100[7:4])* and *FIR_LEN[1:0]* = 10 *(I/O RAM 0x210C[1])*, (384), resulting in 4 ADC conversions. An ADC conversion always consumes an integer number of CK32 clocks. Followed by the conversions is a single CK32 cycle.

Figure 11 also shows that the RTM serial data stream begins transmitting at the beginning of state S. RTM, consisting of 140 CK cycles, always finishes before the next CE code pass starts.

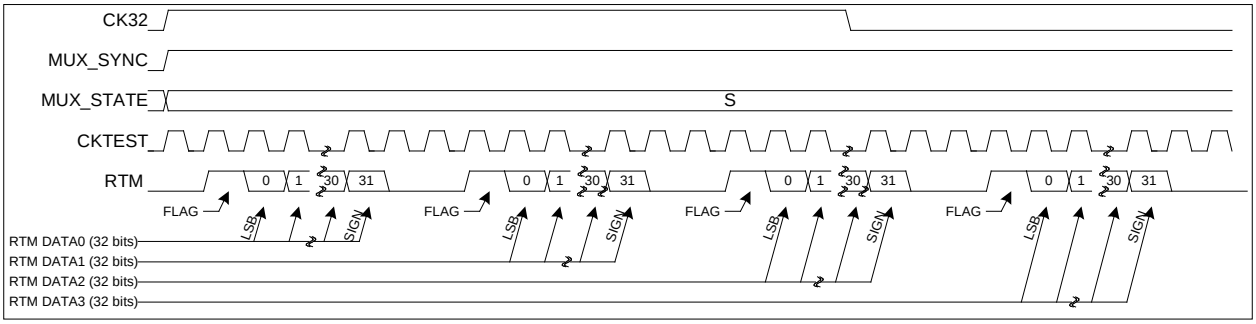

Figure 10: RTM Timing

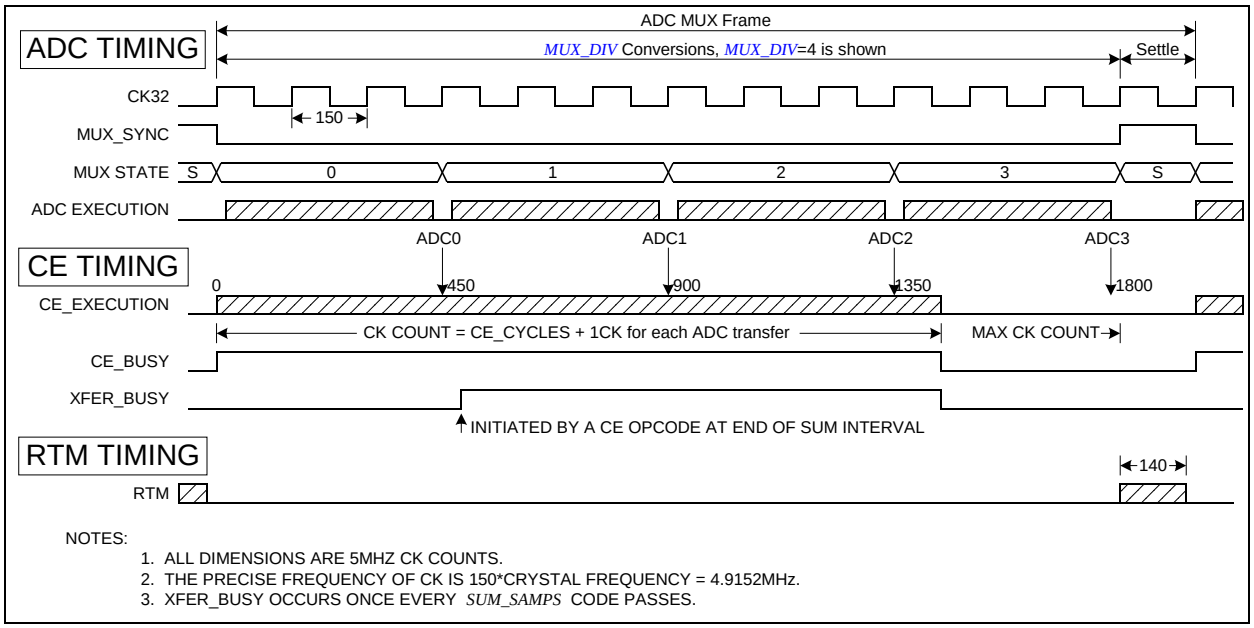

Figure 11: Timing Relationship Between ADC MUX, CE, and RTM Serial Transfer

2.3.6 Pulse Generators

The 71M6541D/F/G and 71M6542F/G provide four pulse generators, VPULSE, WPULSE, XPULSE and YPULSE, as well as hardware support for the VPULSE and WPULSE pulse generators. The pulse generators can be used to output CE status indicators, SAG for example, to DIO pins. All pulses can be configured to generate interrupts to the MPU.

The polarity of the pulses may be inverted with control bit *PLS_INV (I/O RAM 0x210C[0])*. When this bit is set, the pulses are active high, rather than the more usual active low. *PLS_INV* inverts all four pulse outputs.

The function of each pulse generator is determined by the CE code and the MPU code must configure the corresponding pulse outputs in agreement with the CE code. For example, standard CE code produces a mains zero-crossing pulse on XPULSE and a SAG pulse on YPULSE.

A common use of the zero-crossing pulses is to generate interrupt in order to drive real-time clock software in places where the mains frequency is sufficiently accurate to do so and also to adjust for crystal aging. A common use for the SAG pulse is to generate an interrupt that alerts the MPU when mains power is about to fail, so that the MPU code can store accumulated energy and other data to EEPROM before the V3P3SYS supply voltage actually drops.

2.3.6.1 XPULSE and YPULSE

Pulses generated by the CE may be exported to the XPULSE and YPULSE pulse output pins. Pins SEGDIO6 and SEGDIO7 are used for these pulses, respectively. Generally, the XPULSE and YPULSE outputs can be updated once on each pass of the CE code.

See 5.3 CE Interface Description on page 126 for details.

2.3.6.2 VPULSE and WPULSE

Referring to Figure 12, during each CE code pass the hardware stores exported WPULSE and VPULSE sign bits in an 8-bit FIFO and outputs them at a specified interval. This permits the CE code to calculate the VPULSE and WPULSE outputs at the beginning of its code pass and to rely on hardware to spread them over the multiplexer frame. As seen in Figure 12, the FIFO is reset at the beginning of each multiplexer frame. As also seen in Figure 12, the I/O RAM register *PLS_INTERVAL[7:0] (I/O RAM 0x210B[7:0])* controls the delay to the first pulse update and the interval between subsequent updates. The LSB of the *PLS_INTERVAL[7:0]* register is equivalent to 4 CK_FIR cycles (CK_FIR is typically 4.9152MHz if *PLL_FAST*=1 and *ADC_DIV*=0, but other CK_FIR frequencies are possible; see the ADC_DIV definition in Table 76.) If *PLS_INTERVAL[7:0]*=0, the FIFO is deactivated and the pulse outputs are updated immediately.

The MUX frame duration in units of CK_FIR clock cycles is given by:

If *PLL_FAST*=1:

MUX frame duration in CK_FIR cycles = [1 + (*FIR_LEN*+1) * (*ADC_DIV*+1) * (*MUX_DIV*)] * [150 / (*ADC_DIV*+1)]

If *PLL_FAST*=0:

MUX frame duration in CK_FIR cycles = [3 + 3*(*FIR_LEN*+1) * (*ADC_DIV*+1) * (*MUX_DIV*)] * [48 / (*ADC_DIV*+1)]

PLS_INTERVAL[7:0] in units of CK_FIR clock cycles is calculated by:

PLS_INTERVAL[7:0] = floor (Mux frame duration in CK_FIR cycles / CE pulse updates per Mux frame / 4)

Since the FIFO resets at the beginning of each multiplexer frame, the user must specify *PLS_INTERVAL[7:0]* so that all of the possible pulse updates occurring in one CE execution are output <u>before</u> the multiplexer frame completes. For instance, the 71M654x CE code outputs six updates per multiplexer interval, and if the multiplexer interval is 1950 CK_FIR clock cycles long, the ideal value for the interval is 1950/6/4 = 81.25. However, if *PLS_INTERVAL[7:0]* = 82, the sixth output occurs too late and would be lost. In this case, the proper value for *PLS_INTERVAL[7:0]* is 81 (i.e., round down the result).

Since one LSB of *PLS_INTERVAL[7:0]* is equal to 4 CK_FIR clock cycles, the pulse time interval T_I in units of CK_FIR clock cycles is:

$$T_I = 4*PLS_INTERVAL[7:0]$$

If the FIFO is enabled (i.e., *PLS_INTERVAL[7:0]* ≠ 0), hardware also provides a maximum pulse width feature in control register *PLS_MAXWIDTH[7:0] (I/O RAM 0x210A)* . By default, WPULSE and VPULSE are negative pulses (i.e., low level pulses, designed to sink current through an LED). *PLS_MAXWIDTH[7:0]* determines the maximum negative pulse width T_{MAX} in units of CK_FIR clock cycles based on the pulse interval T_I according to the formula:

$$T_{MAX} = (2 * PLS_MAXWIDTH[7:0] + 1) * T_I$$

If *PLS_MAXWIDTH* = 255 or *PLS_INTERVAL*=0, no pulse width checking is performed, and the pulses default to 50% duty cycle. T_{MAX} is typically programmed to 10 ms., which works well with most calibration systems.

The polarity of the pulses may be inverted with the control bit *PLS_INV* (*I/O RAM 0x210C[0]*). When *PLS_INV* is set, the pulses are active high. The default value for *PLS_INV* is zero, which selects active low pulses.

The WPULSE and VPULSE pulse generator outputs are available on pins SEGDIO0/WPULSE and SEGDIO1/VPULSE, respectively (pins 45 and 44). The pulses can also be output on OPT_TX pin 53 (see *OPT_TXE[1:0]*, *I/O RAM 0x2456[3:2]* for details).

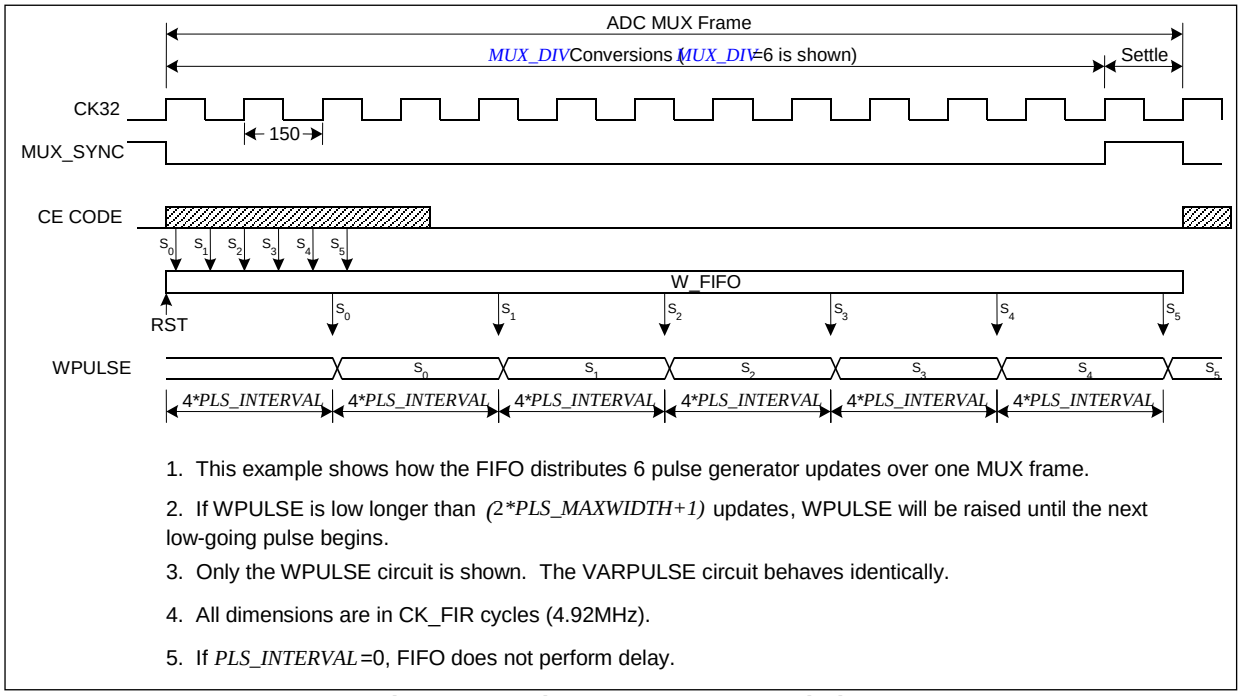

Figure 12. Pulse Generator FIFO Timing

2.3.7 CE Functional Overview

The 71M654x provides an ADC and multiplexer to sample the analog currents and voltages as seen in Figure 2 and Figure 3. The VA and VB voltage sensors are formed by resistive voltage dividers directly connected to the 71M654x device, and therefore always use the ADC and multiplexer facilities in the 71M654x device. Current sensors, however, may be connected directly to the 71M654x or remotely connected through an isolated 71M6x01 device. The remote 71M6x01 sensor has its own separate ADC and voltage reference. When a current sensor is connected via a 71M6x01 isolated sensor, the 71M654x places the sample data received digitally over the isolation interface (via the pulse transformer) in the appropriate CE RAM location, as shown in Figure 3. The ADCs (i.e., ADC in the 71M654x and the ADC in the 71M6x01) process their corresponding sensor channels providing one sample per channel per multiplexer cycle.

Figure 14 (71M6541D/F/G) and Figure 15 (71M6542F/G) show the sampling sequence when both current sensors (IA and IB) are connected directly to the 71M6541D/F/G as seen in Figure 2. However, when the

IB channel is a 71M6x01 isolated sensor, the sample data does not pass through the 71M6541D/F/G multiplexer, as seen in Figure 3. In this case, the sample is taken during the second half of the multiplexer cycle and the data is directly stored in the corresponding CE RAM location as indicated in Figure 3. The timing relationship between the remote current sensor channel and its corresponding voltage is precisely defined so that delay compensation can be properly applied by the CE.

Referring to Figure 15, the 71M6542F/G features an additional voltage input (VB) permitting the implementation of a two-phase meter. As with VA, the VB voltage divider is directly connected to the 71M6542F/G and uses the ADC and multiplexer facilities in the 71M6542F/G. *MUX_DIV[3:0]* = 4 configures the multiplexer to provide an additional time slot to accommodate the additional VB voltage sample. As with the 71M6541D/F/G, IA samples are obtained from a current sensor that is directly connected to the 71M6542F/G, while IB samples may be obtained from a directly connected CT or a remotely connected shunt using a 71M6x01 isolated device as seen in Figure 2 and Figure 3.

The number of samples processed during one accumulation cycle is controlled by the I/O RAM register *SUM_SAMPS[12:0] (I/O RAM 0x2107[4:0], 0x2108[7:0])*. The integration time for each energy output is:

SUM_SAMPS / 2520.6, where 2520.6 is the sample rate in Hz

For example, *SUM_SAMPS* = 2100 establishes 2100 samples per accumulation cycle, which has a duration of 833 ms. After an accumulation cycle is completed, the XFER_BUSY interrupt signals to the MPU that accumulated data are available.

The end of each multiplexer cycle is signaled to the MPU by the CE_BUSY interrupt. At the end of each multiplexer cycle, status information, such as sag data and the digitized input signal, is available to the MPU.

Figure 13 shows the accumulation interval resulting from *SUM_SAMPS* = 2100, consisting of 2100 samples of 397 µs each, followed by the XFER_BUSY interrupt. The sampling in this example is applied to a 50 Hz signal. There is no correlation between the line signal frequency and the choice of *SUM_SAMPS*. Furthermore, sampling does not have to start when the line voltage crosses the zero line, and the length of the accumulation interval need not be an integer multiple of the signal cycles.

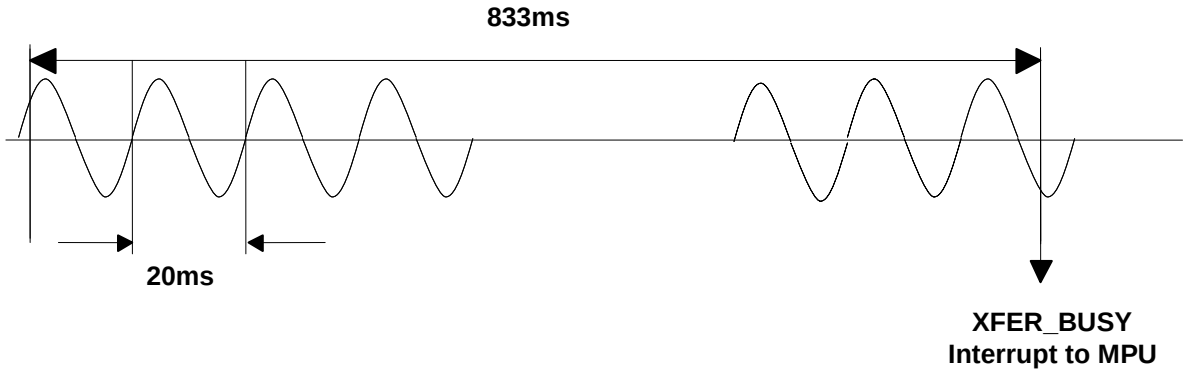

Figure 13: Accumulation Interval

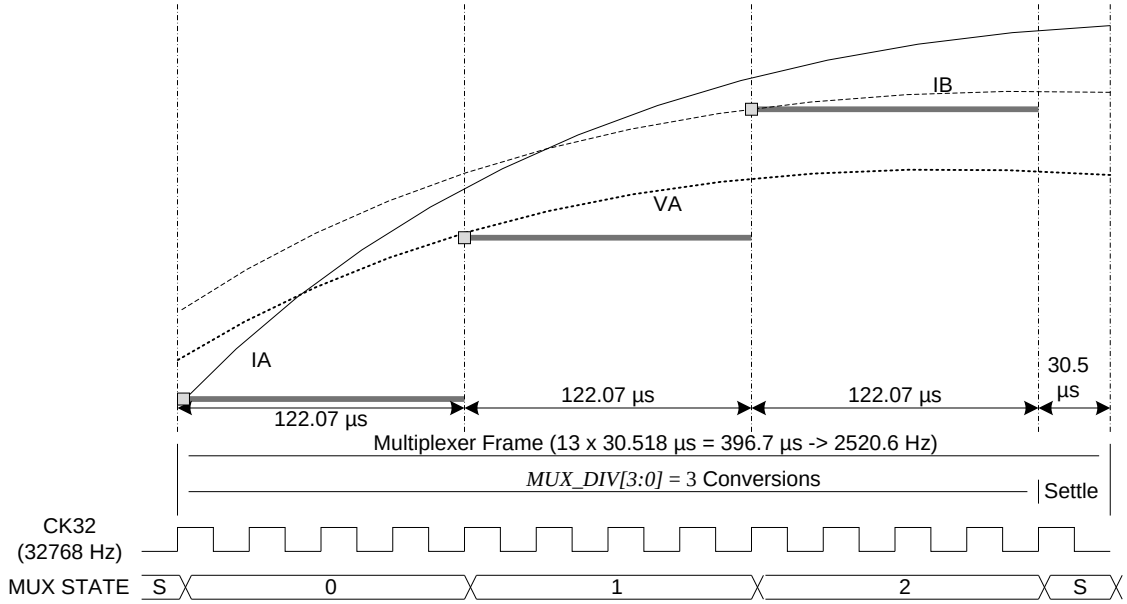

Figure 14: Samples from Multiplexer Cycle (*MUX_DIV[3:0]* = 3)

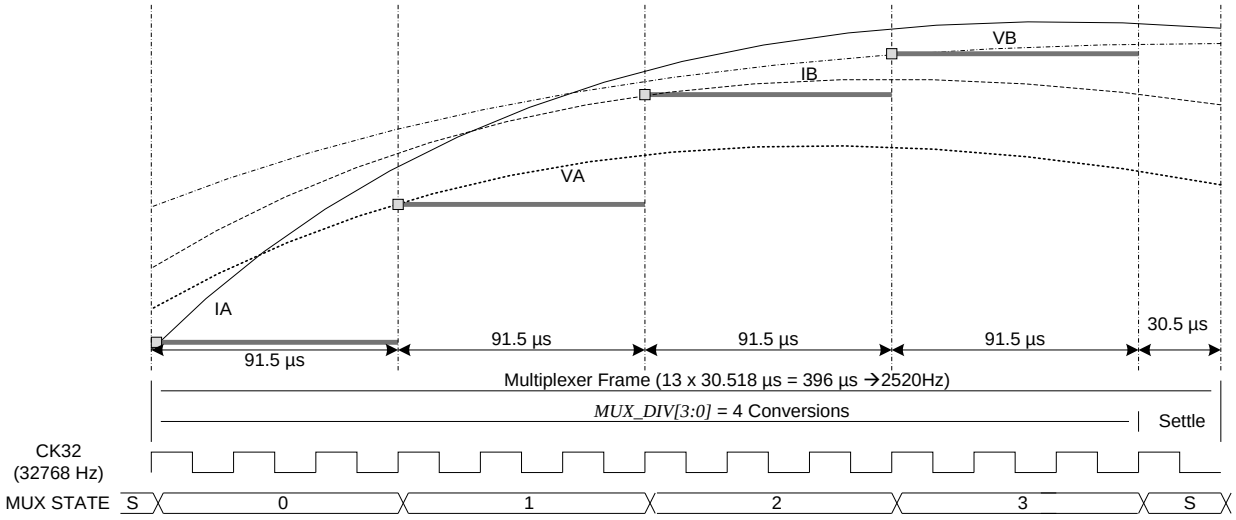

Figure 15: Samples from Multiplexer Cycle (*MUX_DIV[3:0]* = 4)

2.4 80515 MPU Core

The 71M6541D/F/G and 71M6542F/G include an 80515 MPU (8-bit, 8051-compatible) that processes most instructions in one clock cycle. Using a 4.9 MHz clock results in a processing throughput of 4.9 MIPS. The 80515 architecture eliminates redundant bus states and implements parallel execution of fetch and execution phases. Normally, a machine cycle is aligned with a memory fetch, therefore, most of the 1-byte instructions are performed in a single machine cycle (MPU clock cycle). This leads to an 8x average performance improvement (in terms of MIPS) over the Intel 8051 device running at the same clock frequency.

Table 9 shows the CKMPU frequency as a function of the MCK clock (19.6608 MHz) divided by the MPU clock divider which is set in the I/O RAM control field *MPU_DIV[2:0] (I/O RAM 0x2200[2:0])*. Actual processor clocking speed can be adjusted to the total processing demand of the application (metering calculations, AMR management, memory management, LCD driver management and I/O management) using *MPU_DIV[2:0]*, as shown in Table 9.

Table 9: CKMPU Clock Frequencies

MPU_DIV [2:0]	CKMPU Frequency
000	4.9152 MHz
001	2.4576 MHz
010	1.2288 MHz
011	614.4 kHz
100	307.2 kHz
101	
110	
111	

Typical measurement and metering functions based on the results provided by the internal 32-bit compute engine (CE) are available for the MPU as part of the Maxim standard library. Maxim provides demonstration source code to help reduce the design cycle.

2.4.1 Memory Organization and Addressing

The 80515 MPU core incorporates the Harvard architecture with separate code and data spaces. Memory organization in the 80515 is similar to that of the industry standard 8051. There are three memory areas: Program memory (Flash, shared by MPU and CE), external RAM (Data RAM, shared by the CE and MPU, Configuration or I/O RAM), and internal data memory (Internal RAM). Table 10 shows the memory map.

Program Memory

The 80515 can address up to 64 KB of program memory space (0x0000 to 0xFFFF). Program memory is read when the MPU fetches instructions or performs a MOVC operation.

After reset, the MPU starts program execution from program memory location 0x0000. The lower part of the program memory includes reset and interrupt vectors. The interrupt vectors are spaced at 8-byte intervals, starting from 0x0003.

MPU External Data Memory (XRAM)

Both internal and external memory is physically located on the 71M654x device. The external memory referred in this documentation is only external to the 80515 MPU core.

3 KB of RAM starting at address 0x0000 is shared by the CE and MPU. The CE normally uses the first 1 KB, leaving 2 KB for the MPU. Different versions of the CE code use varying amounts. Consult the documentation for the specific code version being used for the exact limit.

✓ If the MPU overwrites the CE's working RAM, the CE's output may be corrupted. If the CE is disabled, the first 0x40 bytes of RAM are still unusable while *MUX_DIV[3:0]* ≠ 0 because the 71M654x ADC writes to these locations. Setting *MUX_DIV[3:0]* = 0 disables the ADC output preventing the CE from writing the first 0x40 bytes of RAM.

To change the slot assignments established by *MUXn_SEL[3:0]*, first set *MUX_DIV[3:0]* to zero, then change the *MUXn_SEL[3:0]* slot assignments, and finally set *MUX_DIV[3:0]* to the number of active MUX frame slots.

The 80515 writes into external data memory when the MPU executes a MOVX @Ri,A or MOVX @DPTR,A instruction. The MPU reads external data memory by executing a MOVX A,@Ri or MOVX A,@DPTR instruction (*PDATA, SFR 0xBF*, provides the upper 8 bytes for the MOVX A,@Ri instruction).

Internal and External Memory Map

Table 10 shows the address, type, use and size of the various memory components.

Table 10: Memory Map

Address (hex)	Memory Technology	Memory Type	Name	Typical Usage	Memory Size (bytes)
0000-7FFF	Flash Memory	Non-volatile	Program memory for MPU and CE	MPU Program and non-volatile data	128/64/32 KB†
				CE program (on 1 KB boundary)	3 KB max.
0000-0BFF	Static RAM	Volatile	External RAM (XRAM)	Shared by CE and MPU	5/3 KB†
2000-27FF	Static RAM	Volatile	Configuration RAM (I/O RAM)	Hardware control	2 KB
2800-287F	Static RAM	Non-volatile (battery)	Configuration RAM (I/O RAM)	Battery-buffered memory	128
0000-00FF	Static RAM	Volatile	Internal RAM	Part of 80515 Core	256

† Memory size depends on IC. See 2.5.1 Physical Memory for details.

MOVX Addressing

There are two types of instructions differing in whether they provide an 8-bit or 16-bit indirect address to the external data RAM.

In the first type, MOVX A,@Ri, the contents of R0 or R1 in the current register bank provide the eight lower-ordered bits of address. The eight high-ordered bits of the address are specified with the *PDATA* SFR. This method allows the user paged access (256 pages of 256 bytes each) to all ranges of the external data RAM.

In the second type of MOVX instruction, MOVX A,@DPTR, the data pointer generates a 16-bit address. This form is faster and more efficient when accessing very large data arrays (up to 64 KB), since no additional instructions are needed to set up the eight high ordered bits of the address.

It is possible to mix the two MOVX types. This provides the user with four separate data pointers, two with direct access and two with paged access, to the entire external memory range.

Dual Data Pointer

The Dual Data Pointer accelerates the block moves of data. The standard *DPTR* is a 16-bit register that is used to address external memory or peripherals. In the 80515 core, the standard data pointer is called *DPTR*, the second data pointer is called *DPTR1*. The data pointer select bit, located in the LSB of the *DPS* register (*DPS*[0], *SFR 0x92*), chooses the active pointer. *DPTR* is selected when *DPS*[0] = 0 and *DPTR1* is selected when *DPS*[0] = 1.

The user switches between pointers by toggling the LSB of the *DPS* register. The values in the data pointers are not affected by the LSB of the *DPS* register. All *DPTR* related instructions use the currently selected *DPTR* for any activity.

The second data pointer may not be supported by certain compilers.

DPTR1 is useful for copy routines, where it can make the inner loop of the routine two instructions faster compared to the reloading of *DPTR* from registers. Any interrupt routine using *DPTR1* must save and restore *DPS*, *DPTR* and *DPTR1*, which increases stack usage and slows down interrupt latency.

By selecting the R80515 core in the Keil compiler project settings and by using the compiler directive "MODC2", dual data pointers are enabled in certain library routines.

An alternative data pointer is available in the form of the *PDATA* register (*SFR 0xBF*), sometimes referred to as *USR2*). It defines the high byte of a 16-bit address when reading or writing XDATA with the instruction MOVX A,@Ri or MOVX @Ri,A.

Internal Data Memory Map and Access

The Internal data memory provides 256 bytes (0x00 to 0xFF) of data memory. The internal data memory address is always 1 byte wide. Table 11 shows the internal data memory map.

The Special Function Registers (SFR) occupy the upper 128 bytes. The SFR area of internal data memory is available only by direct addressing. Indirect addressing of this area accesses the upper 128 bytes of Internal RAM. The lower 128 bytes contain working registers and bit addressable memory. The lower 32 bytes form four banks of eight registers (R0-R7). Two bits on the program memory status word (*PSW, SFR 0xD0*) select which bank is in use. The next 16 bytes form a block of bit addressable memory space at addresses 0x00-0x7F. All the bytes in the lower 128 bytes are accessible through direct or indirect addressing.

Table 11: Internal Data Memory Map

Address Range		Direct Addressing	Indirect Addressing
0x80	0xFF	Special Function Registers (SFRs)	RAM
0x30	0x7F	Byte addressable area	
0x20	0x2F	Bit addressable area	
0x00	0x1F	Register banks R0…R7	

2.4.2 Special Function Registers (SFRs)

A map of the Special Function Registers is shown in Table 12.

Only a few addresses in the SFR memory space are occupied, the others are not implemented. A read access to unimplemented addresses returns undefined data, while a write access has no effect. SFRs specific to the 71M654x are shown in **bold** print on a shaded field. The registers at 0x80, 0x88, 0x90, etc., are bit addressable, all others are byte addressable.

Table 12: Special Function Register Map

Hex/ Bin	Bit Addressable	Byte Addressable							Bin/ Hex
	X000	X001	X010	X011	X100	X101	X110	X111	
F8	***FLAG1***	***STAT***			***REMOTE0***	***SPI1***			**FF**
F0	*B*								**F7**
E8	***IFLAGS***								**EF**
E0	*A*								**E7**
D8	*WDCON*								**DF**
D0	*PSW*								**D7**
C8	*T2CON*								**CF**
C0	*IRCON*								**C7**
B8	*IEN1*	*IP1*	*S0RELH*	*S1RELH*				*PDATA*	**BF**
B0	***P3*** (DIO12:15)		***FLSHCTL***				***FL_BANK***	***PGADR***	**B7**
A8	*IEN0*	*IP0*	*S0RELL*						**AF**
A0	***P2*** (DIO8:11)								**A7**

Hex/ Bin	Bit Addressable	Byte Addressable							Bin/ Hex
	X000	X001	X010	X011	X100	X101	X110	X111	
98	*S0CON*	*S0BUF*	*IEN2*	*S1CON*	*S1BUF*	*S1RELL*	***EEDATA***	***EECTRL***	**9F**
90	***P1***(DIO4:7)		*DPS*		***ERASE***				**97**
88	*TCON*	*TMOD*	*TL0*	*TL1*	*TH0*	*TH1*	*CKCON*		**8F**
80	***P0*** (DIO0:3)	*SP*	*DPL*	*DPH*	*DPL1*	*DPH1*		*PCON*	**87**

2.4.3 Generic 80515 Special Function Registers

Table 13 shows the location, description and reset or power-up value of the generic 80515 SFRs. Additional descriptions of the registers can be found at the page numbers listed in the table.

Table 13: Generic 80515 SFRs - Location and Reset Values

Name	Address (Hex)	Reset value (Hex)	Description	Page
P0	0x80	0xFF	Port 0	36
SP	0x81	0x07	Stack Pointer	35
DPL	0x82	0x00	Data Pointer Low 0	35
DPH	0x83	0x00	Data Pointer High 0	35
DPL1	0x84	0x00	Data Pointer Low 1	35
DPH1	0x85	0x00	Data Pointer High 1	35
PCON	0x87	0x00	UART Speed Control	39
TCON	0x88	0x00	Timer/Counter Control	42
TMOD	0x89	0x00	Timer Mode Control	40
TL0	0x8A	0x00	Timer 0, low byte	40
TL1	0x8B	0x00	Timer 1, high byte	40
TH0	0x8C	0x00	Timer 0, low byte	40
TH1	0x8D	0x00	Timer 1, high byte	40
CKCON	0x8E	0x01	Clock Control (Stretch=1)	36
P1	0x90	0xFF	Port 1	36
DPS	0x92	0x00	Data Pointer select Register	32
S0CON	0x98	0x00	Serial Port 0, Control Register	38
S0BUF	0x99	0x00	Serial Port 0, Data Buffer	37
IEN2	0x9A	0x00	Interrupt Enable Register 2	42
S1CON	0x9B	0x00	Serial Port 1, Control Register	39
S1BUF	0x9C	0x00	Serial Port 1, Data Buffer	37
S1RELL	0x9D	0x00	Serial Port 1, Reload Register, low byte	37
P2	0xA0	0xFF	Port 2	36
IEN0	0xA8	0x00	Interrupt Enable Register 0	42
IP0	0xA9	0x00	Interrupt Priority Register 0	45
S0RELL	0xAA	0xD9	Serial Port 0, Reload Register, low byte	37
P3	0xB0	0xFF	Port 3	36
IEN1	0xB8	0x00	Interrupt Enable Register 1	42
IP1	0xB9	0x00	Interrupt Priority Register 1	45
S0RELH	0xBA	0x03	Serial Port 0, Reload Register, high byte	37
S1RELH	0xBB	0x03	Serial Port 1, Reload Register, high byte	37
PDATA	0xBF	0x00	High address byte for MOVX@Ri - also called *USR2*	32
IRCON	0xC0	0x00	Interrupt Request Control Register	43

Name	Address (Hex)	Reset value (Hex)	Description	Page
T2CON	0xC8	0x00	Polarity for INT2 and INT3	43
PSW	0xD0	0x00	Program Status Word	35
WDCON	0xD8	0x00	Baud Rate Control Register (only WDCON[7] bit used)	37
A	0xE0	0x00	Accumulator	35
B	0xF0	0x00	B Register	35

Accumulator (*ACC, A, SFR 0x E0*):

ACC is the accumulator register. Most instructions use the accumulator to hold the operand. The mnemonics for accumulator-specific instructions refer to accumulator as *A*, not *ACC*.

***B* Register (*SFR 0xF0*):**

The *B* register is used during multiply and divide instructions. It can also be used as a scratch-pad register to hold temporary data.

Program Status Word (*PSW, SFR 0xD0*):

This register contains various flags and control bits for the selection of the register banks (see Table 14).

Table 14: *PSW* Bit Functions (*SFR 0xD0*)

PSW Bit	Symbol	Function
7	*CV*	Carry flag.
6	*AC*	Auxiliary Carry flag for BCD operations.
5	*F0*	General purpose Flag 0 available for user. ✓ F0 is not to be confused with the F0 flag in the *CESTATUS* register.
4	*RS1*	Register bank select control bits. The contents of *RS1* and *RS0* select the working register bank:
3	*RS0*	

RS1/RS0	Bank selected	Location
00	Bank 0	0x00 – 0x07
01	Bank 1	0x08 – 0x0F
10	Bank 2	0x10 – 0x17
11	Bank 3	0x18 – 0x1F

2	*OV*	Overflow flag.
1	–	User defined flag.
0	*P*	Parity flag, affected by hardware to indicate odd or even number of one bits in the Accumulator, i.e., even parity.

Stack Pointer (*SP, SFR 0x81*):

The stack pointer is a 1-byte register initialized to 0x07 after reset. This register is incremented before PUSH and CALL instructions, causing the stack to begin at location 0x08.

Data Pointer:

The data pointers (*DPTR and DPRT1*) are 2 bytes wide. The lower part is *DPL (SFR 0x82)* and *DPL1 (SFR 0x84)*, respectively. The highest is *DPH (SFR 0x83)* and *DPH1 (SFR 0x85)*, respectively. The data pointers can be loaded as two registers (e.g., MOV DPL,#data8). They are generally used to access external code or data space (e.g., MOVC A,@A+DPTR or MOVX A,@DPTR respectively).

Program Counter:

The program counter (*PC*) is 2 bytes wide and initialized to 0x0000 after reset. This register is incremented when fetching operation code or when operating on data from program memory.

Port Registers:

SEGDIO0 through SEGDIO15 are controlled by Special Function Registers *P0*, *P1*, *P2* and *P3* as shown in Table 15. Above SEGDIO15, the *LCD_SEGDIOn[ ]* registers in I/O RAM are used. Since the direction bits are contained in the upper nibble of each SFR *Pn* register and the DIO bits are contained in the lower nibble, it is possible to configure the direction of a given DIO pin and set its output value with a single write operation, thus facilitating the implementation of bit-banged interfaces. Writing a 1 to a *DIO_DIR* bit configures the corresponding DIO as an output, while writing a 0 configures it as an input. Writing a 1 to a *DIO* bit causes the corresponding pin to be at high level (V3P3), while writing a 0 causes the corresponding pin to be held at a low level (GND). See 2.5.8 Digital I/O for additional details.

Table 15: Port Registers (SEGDIO0-15)

SFR Name	SFR Address	D7	D6	D5	D4	D3	D2	D1	D0
P0	0x80	*DIO_DIR[3:0]*				*DIO[3:0]*			
P1	0x90	*DIO_DIR[7:4]*				*DIO[7:4]*			
P2	0xA0	*DIO_DIR[11:8]*				*DIO[11:8]*			
P3	0xB0	*DIO_DIR[15:12]*				*DIO[15:11]*			

Ports *P0-P3* on the chip are bi-directional and control SEGDIO0-15. Each port consists of a Latch (SFR *P0* to *P3*), an output driver and an input buffer, therefore the MPU can output or read data through any of these ports. Even if a DIO pin is configured as an output, the state of the pin can still be read by the MPU, for example when counting pulses issued via DIO pins that are under CE control.

At power-up SEGDIO0-15 are configured as outputs, but the pins are in a high-impedance state because *PORT_E*=0 (*I/O RAM 0x270C[5]*). Host firmware should first configure SEGDIO0-15 to the desired state, then set *PORT_E*=1 to enable the function.

Clock Stretching (*CKCON*)

The three low order bits of the *CKCON[2:0] (SFR 0x8E)* register define the stretch memory cycles that are used for MOVX instructions when accessing external peripherals. The practical value of this register for the 71M6541D/F/G and 71M6542F/G is to guarantee access to XRAM between CE, MPU, and SPI.

Table 16 shows how the signals of the External Memory Interface change when stretch values are set from 0 to 7. The widths of the signals are counted in MPU clock cycles. The post-reset state of the *CKCON*[2:0] (001), which is shown in **bold** in the table, performs the MOVX instructions with a stretch value equal to 1.

Table 16: Stretch Memory Cycle Width

CKCON[2:0]	Stretch Value	Read Signal Width		Write Signal Width	
		memaddr	memrd	memaddr	memwr
000	0	1	1	2	1
001	**1**	**2**	**2**	**3**	**1**
010	2	3	3	4	2
011	3	4	4	5	3
100	4	5	5	6	4
101	5	6	6	7	5
110	6	7	7	8	6
111	7	8	8	9	7

2.4.4 Instruction Set

All instructions of the generic 8051 microcontroller are supported. A complete list of the instruction set and of the associated op-codes is contained in the *71M654X Software User's Guide (SUG)*.

2.4.5 UARTs

The 71M6541D/F/G and 71M6542F/G include a UART (UART0) that can be programmed to communicate with a variety of AMR modules and other external devices. A second UART (UART1) is connected to the optical port, as described in 2.5.7 UART and Optical Interface.

The UARTs are dedicated 2-wire serial interfaces, which can communicate with an external host processor at up to 38,400 bits/s (with MPU clock = 1.2288 MHz). The operation of the RX and TX UART0 pins is as follows:

- UART0 RX: Serial input data are applied at this pin. Conforming to RS-232 standard, the bytes are input LSB first.
- UART0 TX: This pin is used to output the serial data. The bytes are output LSB first.

Several UART-related registers are available for the control and buffering of serial data.

A single SFR register serves as both the transmit buffer and receive buffer (*S0BUF*, *SFR 0x99* for UART0 and *S1BUF*, *SFR 0x9C* for UART1). When written by the MPU, *SxBUF* acts as the transmit buffer, and when read by the MPU, it acts as the receive buffer. Writing data to the transmit buffer starts the transmission by the associated UART. Received data are available by reading from the receive buffer. Both UARTs can simultaneously transmit and receive data.

WDCON[7] (SFR 0xD8) selects whether timer 1 or the internal baud rate generator is used. All UART transfers are programmable for parity enable, parity, 2 stop bits/1 stop bit and XON/XOFF options for variable communication baud rates from 300 to 38400 bps. Table 17 shows how the baud rates are calculated. Table 18 shows the selectable UART operation modes.

Table 17: Baud Rate Generation

	Using Timer 1 (*WDCON[7]* = 0)	**Using Internal Baud Rate Generator (*WDCON[7]* = 1)**
UART0	$2^{smod} * f_{CKMPU} / (384 * (256-TH1))$	$2^{smod} * f_{CKMPU} / (64 * (2^{10}-S0REL))$
UART1	N/A	$f_{CKMPU} / (32 * (2^{10}-S1REL))$

S0REL and *S1REL* are 10-bit values derived by combining bits from the respective timer reload registers. (*S0RELL*, *S0RELH*, *S1RELL*, *S1RELH* are *SFR 0xAA*, *SFR 0xBA*, *SFR 0x9D* and *SFR 0xBB*, respectively) *SMOD* is the *SMOD* bit in the SFR *PCON* register (*SFR 0x87*). *TH1(SFR 0x8D)* is the high byte of timer 1.

Table 18: UART Modes

	UART 0	**UART 1**
Mode 0	N/A	Start bit, 8 data bits, parity, stop bit, variable baud rate (internal baud rate generator)
Mode 1	Start bit, 8 data bits, stop bit, variable baud rate (internal baud rate generator or timer 1)	Start bit, 8 data bits, stop bit, variable baud rate (internal baud rate generator)
Mode 2	Start bit, 8 data bits, parity, stop bit, fixed baud rate 1/32 or 1/64 of f_{CKMPU}	N/A
Mode 3	Start bit, 8 data bits, parity, stop bit, variable baud rate (internal baud rate generator or timer 1)	N/A

Parity of serial data is available through the *P* flag of the accumulator. 7-bit serial modes with parity, such as those used by the FLAG protocol, can be simulated by setting and reading bit 7 of

8-bit output data. 7-bit serial modes without parity can be simulated by setting bit 7 to a constant 1. 8-bit serial modes with parity can be simulated by setting and reading the 9th bit, using the control bits *TB80* (*S0CON*[*3*]) and *TB81* (*S1CON[3]*) in the *S0CON* (*SFR 0x98*) and *S1CON* (*SFR 0x9B*) registers for transmit and *RB81* bit in *S1CON[2]* for receive operations.

The feature of receiving 9 bits (Mode 3 for UART0, Mode A for UART1) can be used as handshake signals for inter-processor communication in multi-processor systems. In this case, the slave processors have bit *SM20* (*S0CON[5]*) for UART0, or *SM21* (*S1CON[5]* for UART1, set to 1. When the master processor outputs the slave's address, it sets the 9th bit to 1, causing a serial port receive interrupt in all the slaves. The slave processors compare the received byte with their address. If there is a match, the addressed slave clears *SM20* or *SM21* and receive the rest of the message. The rest of the slave's ignores the message. After addressing the slave, the host outputs the rest of the message with the 9th bit set to 0, so no additional serial port receive interrupts are generated.

UART Control Registers:

The functions of UART0 and UART1 depend on the setting of the Serial Port Control Registers *S0CON* and *S1CON* shown in Table 19 and Table 20, respectively, and the *PCON* register shown in Table 21.

CAUTION

Since the *TI0*, *RI0*, *TI1* and *RI1* bits are in an SFR bit addressable byte, common practice would be to clear them with a bit operation, but this must be avoided. The hardware implements bit operations as a byte wide read-modify-write hardware macro. If an interrupt occurs after the read, but before the write, its flag is cleared unintentionally.

The proper way to clear these flag bits is to write a byte mask consisting of all ones except for a zero in the location of the bit to be cleared. The flag bits are configured in hardware to ignore ones written to them.

Table 19: The *S0CON* (UART0) Register (SFR 0x98)

<table>
<tr><th>Bit</th><th>Symbol</th><th>Function</th></tr>
<tr><td>S0CON[7]</td><td>SM0</td><td rowspan="2">The SM0 and SM1 bits set the UART0 mode:
<table>
<tr><th>Mode</th><th>Description</th><th>SM0</th><th>SM1</th></tr>
<tr><td>0</td><td>N/A</td><td>0</td><td>0</td></tr>
<tr><td>1</td><td>8-bit UART</td><td>0</td><td>1</td></tr>
<tr><td>2</td><td>9-bit UART</td><td>1</td><td>0</td></tr>
<tr><td>3</td><td>9-bit UART</td><td>1</td><td>1</td></tr>
</table></td></tr>
<tr><td>S0CON[6]</td><td>SM1</td></tr>
<tr><td>S0CON[5]</td><td>SM20</td><td>Enables the inter-processor communication feature.</td></tr>
<tr><td>S0CON[4]</td><td>REN0</td><td>If set, enables serial reception. Cleared by software to disable reception.</td></tr>
<tr><td>S0CON[3]</td><td>TB80</td><td>The 9th transmitted data bit in Modes 2 and 3. Set or cleared by the MPU, depending on the function it performs (parity check, multiprocessor communication etc.)</td></tr>
<tr><td>S0CON[2]</td><td>RB80</td><td>In Modes 2 and 3 it is the 9th data bit received. In Mode 1, SM20 is 0, RB80 is the stop bit. In mode 0, this bit is not used. Must be cleared by software.</td></tr>
<tr><td>S0CON[1]</td><td>TI0</td><td>Transmit interrupt flag; set by hardware after completion of a serial transfer. Must be cleared by software (see Caution above).</td></tr>
<tr><td>S0CON[0]</td><td>RI0</td><td>Receive interrupt flag; set by hardware after completion of a serial reception. Must be cleared by software (see Caution above).</td></tr>
</table>

Table 20: The *S1CON* (UART1) Register (SFR 0x9B)

Bit	Symbol	Function
S1CON[7]	*SM*	Sets the baud rate and mode for UART1. **SM** / **Mode** / **Description** / **Baud Rate** 0 / A / 9-bit UART / variable 1 / B / 8-bit UART / variable
S1CON[5]	*SM21*	Enables the inter-processor communication feature.
S1CON[4]	*REN1*	If set, enables serial reception. Cleared by software to disable reception.
S1CON[3]	*TB81*	The 9th transmitted data bit in Mode A. Set or cleared by the MPU, depending on the function it performs (parity check, multiprocessor communication etc.)
S1CON[2]	*RB81*	In Modes A and B, it is the 9th data bit received. In Mode B, if *SM21* is 0, *RB81* is the stop bit. Must be cleared by software
S1CON[1]	*TI1*	Transmit interrupt flag, set by hardware after completion of a serial transfer. Must be cleared by software (see Caution above).
S1CON[0]	*RI1*	Receive interrupt flag, set by hardware after completion of a serial reception. Must be cleared by software (see Caution above).

Table 21: *PCON* Register Bit Description (SFR 0x87)

Bit	Symbol	Function
PCON[7]	*SMOD*	The *SMOD* bit doubles the baud rate when set

2.4.6 Timers and Counters

The 80515 has two 16-bit timer/counter registers: Timer 0 and Timer 1. These registers can be configured for counter or timer operations.

In timer mode, the register is incremented every machine cycle, i.e., it counts up once for every 12 periods of the MPU clock. In counter mode, the register is incremented when the falling edge is observed at the corresponding input signal T0 or T1 (T0 and T1 are the timer gating inputs derived from certain DIO pins, see 2.5.8 Digital I/O). Since it takes 2 machine cycles to recognize a 1-to-0 event, the maximum input count rate is 1/2 of the clock frequency (CKMPU). There are no restrictions on the duty cycle, however to ensure proper recognition of the 0 or 1 state, an input should be stable for at least 1 machine cycle.

Four operating modes can be selected for Timer 0 and Timer 1, as shown in Table 22 and Table 23. The *TMOD* (*SFR 0x89*) Register, shown in Table 24, is used to select the appropriate mode. The timer/counter operation is controlled by the *TCON* (*SFR 0x88*) Register, which is shown in Table 25. Bits *TR1* (*TCON[6]*) and *TR0* (*TCON[4]*) in the *TCON* register start their associated timers when set.

Table 22: Timers/Counters Mode Description

M1	*M0*	Mode	Function
0	0	Mode 0	13-bit Counter/Timer mode with 5 lower bits in the *TL0* or *TL1* (*SFR 0x8A or SFR 0x8B*) register and the remaining 8 bits in the *TH0* or *TH1* (*SFR 0x8C or SFR 0x8D*) register (for Timer 0 and Timer 1, respectively). The 3 high order bits of *TL0* and *TL1* are held at zero.
0	1	Mode 1	16-bit Counter/Timer mode.
1	0	Mode 2	8-bit auto-reload Counter/Timer. The reload value is kept in *TH0* or *TH1*, while *TL0* or *TL1* is incremented every machine cycle. When *TL(*x) overflows, a value from *TH(*x) is copied to *TL*(x) (where x is 0 for counter/timer 0 or 1 for counter/timer 1.
1	1	Mode 3	If Timer 1 *M1* and *M0* bits are set to 1, Timer 1 stops. If Timer 0 *M1* and *M0* bits are set to 1, Timer 0 acts as two independent 8-bit Timer/Counters.

✓ In Mode 3, *TL0* is affected by *TR0* and gate control bits, and sets the *TF0* flag on overflow, while *TH0* is affected by the *TR1* bit, and the *TF1* flag is set on overflow.

Table 23 specifies the combinations of operation modes allowed for Timer 0 and Timer 1.

Table 23: Allowed Timer/Counter Mode Combinations

	Timer 1		
	Mode 0	**Mode 1**	**Mode 2**
Timer 0 - mode 0	Yes	Yes	Yes
Timer 0 - mode 1	Yes	Yes	Yes
Timer 0 - mode 2	Not allowed	Not allowed	Yes

Table 24: *TMOD* Register Bit Description (SFR 0x89)

Bit	Symbol	Function
Timer/Counter 1		
TMOD[7]	*Gate*	If *TMOD[7]* is set, external input signal control is enabled for Counter 1. The *TR1* bit in the *TCON* register (*SFR 0x88*) must also be set in order for Counter 1 to increment. With these settings, Counter 1 increments on every falling edge of the logic signal applied to one or more of the SEGDIO2-11 pins, as specified by the contents of the *DIO_R2* through *DIO_R11* registers. See 2.5.8 Digital I/O and LCD Segment Drivers and Table 47.
TMOD[6]	*C/T*	Selects timer or counter operation. When set to 1, a counter operation is performed. When cleared to 0, the corresponding register functions as a timer.
TMOD[5:4]	*M1:M0*	Selects the mode for Timer/Counter 1, as shown in Table 22.
Timer/Counter 0:		
TMOD[3]	*Gate*	If *TMOD[3]* is set, external input signal control is enabled for Counter 0. The *TR0* bit in the *TCON* register (*SFR 0x88*) must also be set in order for Counter 0 to increment. With these settings, Counter 0 is incremented on every falling edge of the logic signal applied to one or more of the SEGDIO2-11 pins, as specified by the contents of the *DIO_R2* through *DIO_R11* registers. See 2.5.8 Digital I/O and LCD Segment Drivers and Table 47.
TMOD[2]	*C/T*	Selects timer or counter operation. When set to 1, a counter operation is performed. When cleared to 0, the corresponding register functions as a timer.
TMOD[1:0]	*M1:M0*	Selects the mode for Timer/Counter 0 as shown in Table 22.

Table 25: The *TCON* Register Bit Functions (SFR 0x88)

Bit	Symbol	Function
TCON[7]	*TF1*	The Timer 1 overflow flag is set by hardware when Timer 1 overflows. This flag can be cleared by software and is automatically cleared when an interrupt is processed.
TCON[6]	*TR1*	Timer 1 run control bit. If cleared, Timer 1 stops.
TCON[5]	*TF0*	Timer 0 overflow flag set by hardware when Timer 0 overflows. This flag can be cleared by software and is automatically cleared when an interrupt is processed.
TCON[4]	*TR0*	Timer 0 Run control bit. If cleared, Timer 0 stops.
TCON[3]	*IE1*	Interrupt 1 edge flag is set by hardware when the falling edge on external pin int1 is observed. Cleared when an interrupt is processed.
TCON[2]	*IT1*	Interrupt 1 type control bit. Selects either the falling edge or low level on input pin to cause an interrupt.
TCON[1]	*IE0*	Interrupt 0 edge flag is set by hardware when the falling edge on external pin int0 is observed. Cleared when an interrupt is processed.
TCON[0]	*IT0*	Interrupt 0 type control bit. Selects either the falling edge or low level on input pin to cause interrupt.

2.4.7 WD Timer (Software Watchdog Timer)

There is no internal software watchdog timer. Use the standard hardware watchdog timer instead (see 2.5.11 Hardware Watchdog Timer).

2.4.8 Interrupts

The 80515 provides 11 interrupt sources with four priority levels. Each source has its own interrupt request flag(s) located in a special function register (*TCON, IRCON, and SCON*). Each interrupt requested by the corresponding interrupt flag can be individually enabled or disabled by the interrupt enable bits in the *IEN0 (SFR 0xA8), IEN1 (SFR 0xB8)*, and *IEN2 (SFR 0x9A)*. Figure 16 shows the device interrupt structure.

Referring to Figure 16, interrupt sources can originate from within the 80515 MPU core (referred to as Internal Sources) or can originate from other parts of the 71M654x SoC (referred to as External Sources). There are seven external interrupt sources, as seen in the leftmost part of Figure 16, and in Table 26 and Table 27 (i.e., *EX0-EX6*).

Interrupt Overview

When an interrupt occurs, the MPU vectors to the predetermined address as shown in Table 38. Once the interrupt service has begun, it can be interrupted only by a higher priority interrupt. The interrupt service is terminated by a return from interrupt instruction, RETI. When a RETI instruction is performed, the processor returns to the instruction that would have been next when the interrupt occurred.

When the interrupt condition occurs, the processor also indicates this by setting a flag bit. This bit is set regardless of whether the interrupt is enabled or disabled. Each interrupt flag is sampled once per machine cycle, and then samples are polled by the hardware. If the sample indicates a pending interrupt when the interrupt is enabled, then the interrupt request flag is set. On the next instruction cycle, the interrupt is acknowledged by hardware forcing an LCALL to the appropriate vector address, if the following conditions are met:

- No interrupt of equal or higher priority is already in progress.
- An instruction is currently being executed and is not completed.
- The instruction in progress is not RETI or any write access to the registers *IEN0, IEN1, IEN2, IP0* or *IP1*.

Special Function Registers for Interrupts

The following SFR registers control the interrupt functions:

- The interrupt enable registers: *IEN0*, *IEN1* and *IEN2* (see Table 26, Table 27 and Table 28).
- The Timer/Counter control registers, *TCON* and *T2CON* (see
- Table 29 and Table 30).
- The interrupt request register, *IRCON* (see Table 31).

- The interrupt priority registers: *IP0* and *IP1* (see Table 36).

Table 26: The *IEN0* Bit Functions (SFR 0xA8)

Bit	Symbol	Function
IEN0[7]	*EAL*	*EAL* = 0 disables all interrupts.
IEN0[6]	–	Not used.
IEN0[5]	–	Not used.
IEN0[4]	*ES0*	*ES0* = 0 disables serial channel 0 interrupt.
IEN0[3]	*ET1*	*ET1* = 0 disables timer 1 overflow interrupt.
IEN0[2]	*EX1*	*EX1* = 0 disables external interrupt 1: DIO status change
IEN0[1]	*ET0*	*ET0* = 0 disables timer 0 overflow interrupt.
IEN0[0]	*EX0*	*EX0* = 0 disables external interrupt 0: DIO status change

Table 27: The *IEN1* Bit Functions (SFR 0xB8)

Bit	Symbol	Function
IEN1[7]	–	Not used.
IEN1[6]	–	Not used.
IEN1[5]	*EX6*	*EX6* = 0 disables external interrupt 6: XFER_BUSY, RTC_1S, RTC_1M or RTC_T
IEN1[4]	*EX5*	*EX5* = 0 disables external interrupt 5: EEPROM or SPI
IEN1[3]	*EX4*	*EX4* = 0 disables external interrupt 4: VSTAT
IEN1[2]	*EX3*	*EX3* = 0 disables external interrupt 3: CE_BUSY
IEN1[1]	*EX2*	*EX2* = 0 disables external interrupt 2: XPULSE, YPULSE, WPULSE or VPULSE
IEN1[0]	–	Not used.

Table 28: The *IEN2* Bit Functions (SFR 0x9A)

Bit	Symbol	Function
IEN2[0]	*ES1*	*ES1* = 0 disables the serial channel 1 interrupt.

Table 29: *TCON* Bit Functions (SFR 0x88)

Bit	Symbol	Function
TCON[7]	*TF1*	Timer 1 overflow flag.
TCON[6]	*TR1*	Not used for interrupt control.
TCON[5]	*TF0*	Timer 0 overflow flag.
TCON[4]	*TR0*	Not used for interrupt control.
TCON[3]	*IE1*	External interrupt 1 flag: DIO status changed
TCON[2]	*IT1*	External interrupt 1 type control bit: 0 = interrupt on low level. 1 = interrupt on falling edge.
TCON[1]	*IE0*	External interrupt 0 flag: DIO status changed
TCON[0]	*IT0*	External interrupt 0 type control bit: 0 = interrupt on low level. 1 = interrupt on falling edge.

Table 30: The *T2CON* Bit Functions (SFR 0xC8)

Bit	Symbol	Function
T2CON[7]	–	Not used.
T2CON[6]	*I3FR*	Polarity control for external interrupt 3: CE_BUSY 0 = falling edge. 1 = rising edge.
T2CON[5]	*I2FR*	Polarity control for external interrupt 2: XPULSE, YPULSE, WPULSE and VPULSE 0 = falling edge. 1 = rising edge.
T2CON[4:0]	–	Not used.

Table 31: The *IRCON* Bit Functions (SFR 0xC0)

Bit	Symbol	Function
IRCON[7]	–	Not used
IRCON[6]	–	Not used
IRCON[5]	*IEX6*	1 = External interrupt 6 flag: XFER_BUSY, RTC_1S, RTC_1M or RTC_T
IRCON[4]	*IEX5*	1 = External interrupt 5 flag: EEPROM or SPI
IRCON[3]	*IEX4*	1 = External interrupt 4 flag: VSTAT
IRCON[2]	*IEX3*	1 = External interrupt 3 flag: CE_BUSY
IRCON[1]	*IEX2*	1 = External interrupt 2 flag: XPULSE, YPULSE, WPULSE or VPULSE
IRCON[0]	–	Not used.

TF0 and *TF1* (Timer 0 and Timer 1 overflow flags) are automatically cleared by hardware when the service routine is called (Signals T0ACK and T1ACK – port ISR – active high when the service routine is called). *IE0*, IE1 and IEX2-IEX6 are cleared automatically when hardware causes execution to vector to the interrupt service routine.

External MPU Interrupts

The seven external interrupts are the interrupts external to the 80515 core, i.e., signals that originate in other parts of the 71M654x, for example the CE, DIO, RTC, or EEPROM interface.

The external interrupts are connected as shown in Table 32. The polarity of interrupts 2 and 3 is programmable in the MPU via the *I3FR* and *I2FR* bits in *T2CON (SFR 0xC8)*. Interrupts 2 and 3 should be programmed for falling sensitivity (*I3FR* = *I2FR* = 0). The generic 8051 MPU literature states that interrupts 4 through 6 are defined as rising-edge sensitive. Thus, the hardware signals attached to interrupts 5 and 6 are inverted to achieve the edge polarity shown in Table 32.

Table 32: External MPU Interrupts

External Interrupt	Connection	Polarity	Flag Reset
0	Digital I/O (IE0)	see 2.5.8	automatic
1	Digital I/O (IE1)	see 2.5.8	automatic
2	CE_PULSE (IE_XPULSE, IE_YPULSE, IE_WPULSE, IE_VPULSE)	rising	manual
3	CE_BUSY (IE3)	falling	automatic
4	VSTAT (VSTAT[2:0] changed) (IE4)	rising	automatic
5	EEPROM busy (falling), SPI (rising) (IE_EEX, IE_SPI)	—	manual
6	XFER_BUSY (falling), RTC_1SEC, RTC_1MIN, RTC_T (IE_XFER, IE_RTC1S, IE_RTC1M, IE_RTCT)	falling	manual

External interrupt 0 and 1 can be mapped to pins on the device using DIO resource maps. See 2.5.8 Digital I/O for more information.

SFR enable bits must be set to permit any of these interrupts to occur. Likewise, each interrupt has its own flag bit, which is set by the interrupt hardware, and reset by the MPU interrupt handler. XFER_BUSY, RTC_1SEC, RTC_1MIN, RTC_T, SPI, PLLRISE and PLLFALL have their own enable and flag bits in addition to the interrupt 6, 4 and enable and flag bits (see Table 33: Interrupt Enable and Flag Bits).

CAUTION

IE0 through IEX6 are cleared automatically when the hardware vectors to the interrupt handler. The other flags, *IE_XFER* through *IE_VPULSE*, are cleared by writing a zero to them.

Since these bits are in an SFR bit addressable byte, common practice would be to clear them with a bit operation, but this must be avoided. The hardware implements bit operations as a byte wide read-modify-write hardware macro. If an interrupt occurs after the read, but before the write, its flag cleared unintentionally.

The proper way to clear the flag bits is to write a byte mask consisting of all ones except for a zero in the location of the bit to be cleared. The flag bits are configured in hardware to ignore ones written to them.

Table 33: Interrupt Enable and Flag Bits

Interrupt Enable		Interrupt Flag		Interrupt Description
Name	**Location**	**Name**	**Location**	
EX0	SFR 0xA8[[0]	*IE0*	SFR 0x88[1]	External interrupt 0
EX1	SFR 0xA8[2]	*IE1*	SFR 0x88[3]	External interrupt 1
EX2	SFR 0xB8[1]	*IEX2*	SFR 0xC0[1]	External interrupt 2
EX3	SFR 0xB8[2]	*IEX3*	SFR 0xC0[2]	External interrupt 3
EX4	SFR 0xB8[3]	*IEX4*	SFR 0xC0[3]	External interrupt 4
EX5	SFR 0xB8[4]	*IEX5*	SFR 0xC0[4]	External interrupt 5
EX6	SFR 0xB8[5]	*IEX6*	SFR 0xC0[5]	External interrupt 6
EX_XFER	0x2700[0]	*IE_XFER*	SFR 0xE8[0]	XFER_BUSY interrupt (int 6)
EX_RTC1S	0x2700[1]	*IE_RTC1S*	SFR 0xE8[1]	RTC_1SEC interrupt (int 6)
EX_RTC1M	0x2700[2]	*IE_RTC1M*	SFR E0x8[2]	RTC_1MIN interrupt (int 6)
EX_RTCT	0x2700[4]	*IE_RTCT*	SFR 0xE8[4]	RTC_T alarm clock interrupt (int 6)
EX_SPI	0x2701[7]	*IE_SPI*	SFR 0xF8[7]	SPI interrupt
EX_EEX	0x2700[7]	*IE_EEX*	SFR 0xE8[7]	EEPROM interrupt
EX_XPULSE	0x2700[6]	*IE_XPULSE*	SFR 0xE8[6]	CE_XPULSE interrupt (int 2)
EX_YPULSE	0x2700[5]	*IE_YPULSE*	SFR 0xE8[5]	CE_YPULSE interrupt (int 2)
EX_WPULSE	0x2701[6]	*IE_WPULSE*	SFR 0xF8[6]	CE_WPULSE interrupt (int 2)
EX_VPULSE	0x2701[5]	*IE_VPULSE*	SFR 0xF8[5]	CE_VPULSE interrupt (int 2)

Interrupt Priority Level Structure

All interrupt sources are combined in groups, as shown in Table 34.

Table 34: Interrupt Priority Level Groups

Group	Group Members	
0	External interrupt 0	Serial channel 1 interrupt
1	Timer 0 interrupt	External interrupt 2
2	External interrupt 1	External interrupt 3
3	Timer 1 interrupt	External interrupt 4
4	Serial channel 0 interrupt	External interrupt 5
5	—	External interrupt 6

Each group of interrupt sources can be programmed individually to one of four priority levels (as shown in Table 35) by setting or clearing one bit in the SFR interrupt priority register *IP0* (*SFR 0xA9*) and one in *IP1 (SFR 0xB9)* (Table 36). If requests of the same priority level are received simultaneously, an internal polling sequence as shown in Table 37 determines which request is serviced first.

✓ Changing interrupt priorities while interrupts are enabled can easily cause software defects. It is best to set the interrupt priority registers only once during initialization before interrupts are enabled.

Table 35: Interrupt Priority Levels

***IP1*[x]**	***IP0*[x]**	**Priority Level**
0	0	Level 0 (lowest)
0	1	Level 1
1	0	Level 2
1	1	Level 3 (highest)

Table 36: Interrupt Priority Registers (*IP0* and *IP1*)

Register	Address	Bit 7 (MSB)	Bit 6	Bit 5	Bit 4	Bit 3	Bit 2	Bit 1	Bit 0 (LSB)
IP0	SFR 0xA9	–	–	*IP0[5]*	*IP0[4]*	*IP0[3]*	*IP0[2]*	*IP0[1]*	*IP0[0]*
IP1	SFR 0xB9	–	–	*IP1[5]*	*IP1[4]*	*IP1[3]*	*IP1[2]*	*IP1[1]*	*IP1[0]*

Table 37: Interrupt Polling Sequence

External interrupt 0	Polling sequence
Serial channel 1 interrupt	
Timer 0 interrupt	
External interrupt 2	
External interrupt 1	
External interrupt 3	
Timer 1 interrupt	
External interrupt 4	
Serial channel 0 interrupt	
External interrupt 5	
External interrupt 6	

Interrupt Sources and Vectors

Table 38 shows the interrupts with their associated flags and vector addresses.

Table 38: Interrupt Vectors

Interrupt Request Flag	Description	Interrupt Vector Address
IE0	External interrupt 0	0x0003
TF0	Timer 0 interrupt	0x000B
IE1	External interrupt 1	0x0013
TF1	Timer 1 interrupt	0x001B
RI0/TI0	Serial channel 0 interrupt	0x0023
RI1/TI1	Serial channel 1 interrupt	0x0083
IEX2	External interrupt 2	0x004B
IEX3	External interrupt 3	0x0053
IEX4	External interrupt 4	0x005B
IEX5	External interrupt 5	0x0063
IEX6	External interrupt 6	0x006B

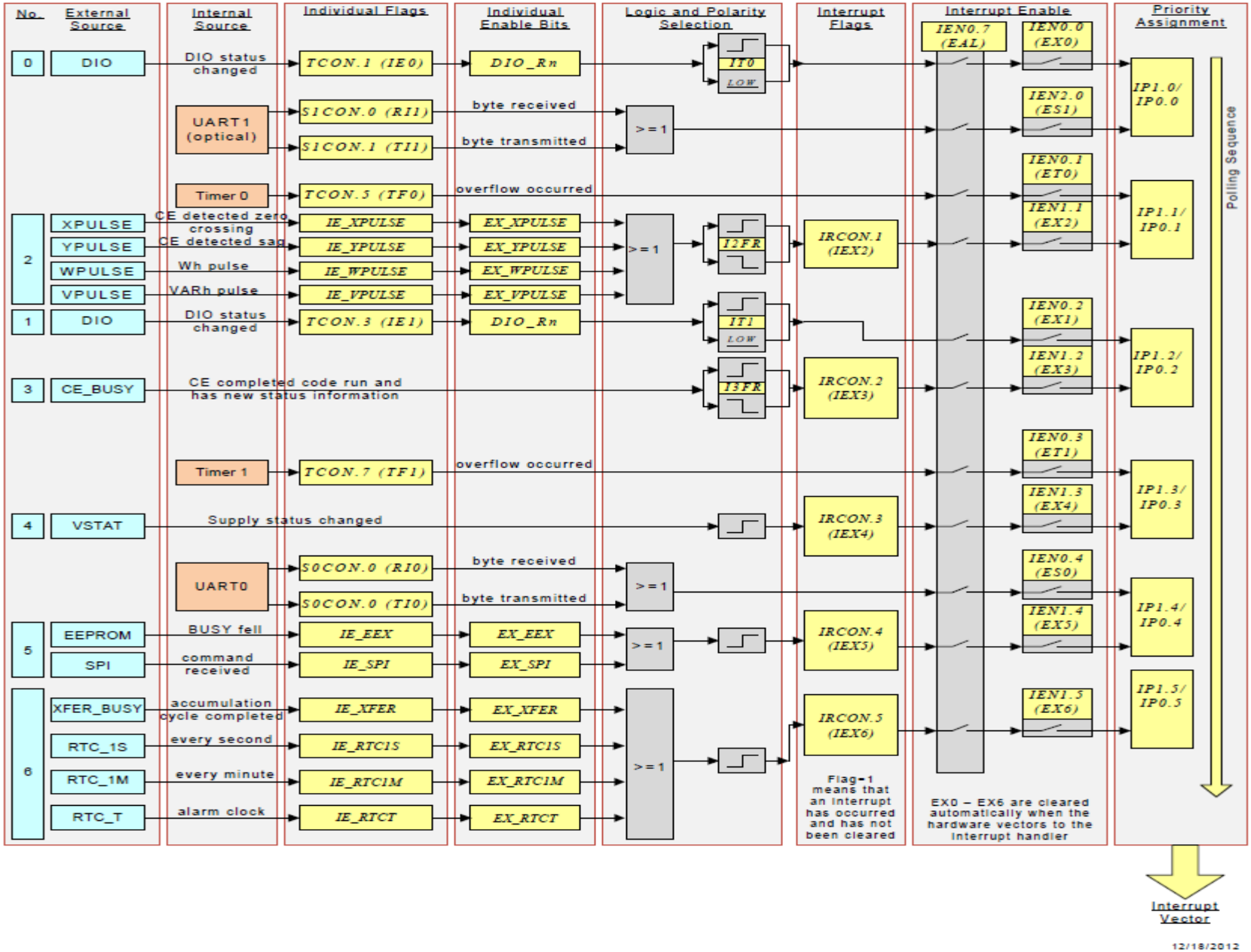

Figure 16: Interrupt Structure

2.5 On-Chip Resources

2.5.1 Physical Memory

2.5.1.1 Flash Memory

The device includes 128KB (71M6541G, 71M6542G), 64KB (71M6542F, 71M6541F) or 32KB (71M6541D) of on-chip flash memory. The flash memory primarily contains MPU and CE program code. It also contains images of the CE RAM and I/O RAM. On power-up, before enabling the CE, the MPU copies these images to their respective locations.

Flash space allocated for the CE program is limited to 4096 16-bit words (8 KB). The CE program must begin on a 1-KB boundary of the flash address space. The *CE_LCTN[5:0]* field (*I/O RAM 0x2109[5:0]*) defines which 1 KB boundary contains the CE code. Thus, the first CE instruction is located at 1024**CE_LCTN[5:0]*.

Flash memory can be accessed by the MPU, the CE, and by the SPI interface (R/W).

Table 39: Flash Memory Access

Access by	Access Type	Condition
MPU	R/W/E	W/E only if CE is disabled.
CE	R	
SPI	R/W/E	Access only when SFM is invoked (MPU halted).

Flash Write Procedures

If the *FLSH_UNLOCK[3:0] (I/O RAM 0x2702[7:4]* key is correctly programmed, the MPU may write to the flash memory. This is one of the non-volatile storage options available to the user in addition to external EEPROM.

The flash program write enable bit, *FLSH_PWE (SFR 0xB2[0]),* differentiates 80515 data store instructions (MOVX@DPTR,A) between Flash and XRAM writes. This bit is automatically cleared by hardware after each byte write operation. Write operations to this bit are inhibited when interrupts are enabled.

If the CE bit is enabled (*CE_E* = 1, *I/O RAM 0x2106[0]*), flash write operations must not be attempted unless *FLSH_PSTWR (SFR 0xB2[2]*) is set. This bit enables the "posted flash write" capability. *FLSH_PSTWR* has no effect when *CE_E* = 0). When *CE_E* = 1, however, *FLSH_PSTWR* delays a flash write until the time interval between the CE code passes. During this delay time, the *FLSH_PEND* bit (*SFR 0xB2[3]*) is high, and the MPU continues to execute commands. When the CE code pass ends (CE_BUSY falls), the *FLSH_PEND* bit falls and the write operation occurs. The MPU can query the *FLSH_PEND* bit to determine when the write operation has been completed. While *FLSH_PEND* = 1, further flash write requests are ignored.

Updating Individual Bytes in Flash Memory

The original state of a flash byte is 0xFF (all bits are 1). Once a value other than 0xFF is written to a flash memory cell, overwriting with a different value usually requires that the cell be erased first. Since cells cannot be erased individually, the page has to be copied to RAM, followed by a page erase. After this, the page can be updated in RAM and then written back to the flash memory.

Flash Erase Procedures

Flash erasure is initiated by writing a specific data pattern to specific SFR registers in the proper sequence. These special pattern/sequence requirements prevent inadvertent erasure of the flash memory.

The mass erase sequence is:

- Write 1 to the *FLSH_MEEN* bit (*SFR 0xB2[1]*).
- Write the pattern 0xAA to the *FLSH_ERASE* register (*SFR 0x94*).

✓ The mass erase cycle can only be initiated when the ICE port is enabled.

The page erase sequence is:

- Write the page address to *FLSH_PGADR[5:0]* (*SFR 0xB7[7:2]*).
- Write the pattern 0x55 to the *FLSH_ERASE* register (*SFR 0x94*).

Program Security

When enabled, the security feature limits the ICE to global flash erase operations only. All other ICE operations are blocked. This guarantees the security of the user's MPU and CE program code. Security is enabled by MPU code that is executed in a 64 CKMPU cycle pre-boot interval before the primary boot sequence begins. Once security is enabled, the only way to disable it is to perform a global erase of the flash, followed by a chip reset.

The first 64 cycles of the MPU boot code are called the pre-boot phase because during this phase the ICE is inhibited. A read-only status bit, *PREBOOT (SFR 0xB2[7])*, identifies these cycles to the MPU. Upon completion of pre-boot, the ICE can be enabled and is permitted to take control of the MPU.

The security enable bit, *SECURE (SFR 0xB2[6]),* is reset whenever the chip is reset. Hardware associated with the bit permits only ones to be written to it. Thus, pre-boot code may set *SECURE* to enable the security feature but may not reset it. Once *SECURE* is set, the pre-boot code is protected and no external read of program code is possible.

Specifically, when the *SECURE* bit is set, the following applies:

- The ICE is limited to bulk flash erase only.
- Page zero of flash memory, the preferred location for the user's pre-boot code, may not be page-erased by either MPU or ICE. Page zero may only be erased with global flash erase.
- Write operations to page zero, whether by MPU or ICE are inhibited.

The 71M6541D/F/G and 71M6542F/G also include hardware to protect against unintentional Flash write and erase. To enable flash write and erase operations, a 4-bit hardware key that must be written to the *FLSH_UNLOCK[3:0]* field. The key is the binary number '0010'. If *FLSH_UNLOCK[3:0]* is not '0010', the Flash erase and write operation is inhibited by hardware. Proper operation of this security key requires that there be no firmware function that writes '0010' to *FLSH_UNLOCK[3:0]*. The key should be written by the external SPI master, in the case of SPI flash programming (SFM mode), or through the ICE interface in the case of ICE flash programming. When a boot loader is used, the key should be sent to the boot load code which then writes it to *FLSH_UNLOCK[3:0]*. *FLSH_UNLOCK[3:0]* is not automatically reset. It should be cleared when the SPI or ICE has finished changing the Flash. Table 40 summarizes the I/O RAM registers used for flash security.

Table 40: Flash Security

Name	Location	Rst	Wk	Dir	Description
FLSH_UNLOCK[3:0]	2702[7:4]	0	0	R/W	Must be a 2 to enable any flash modification. See the description of Flash security for more details.
SECURE	SFR B2[6]	0	0	R/W	Inhibits erasure of page 0 and flash addresses above the beginning of CE code as defined by *CE_LCTN[5:0] (I/O RAM 0x2109[5:0]).* Also inhibits the read of flash via the ICE and SPI ports.

SPI Flash Mode

In normal operation, the SPI slave interface cannot read or write the flash memory. However, the 71M6541D/F/G and 71M6542F/G contain a Special Flash Mode (SFM) that facilitates initial (production) programming of the flash memory. When the 71M654x is in SFM mode, the SPI interface can erase, read, and write the flash. Other memory elements such as XRAM and I/O RAM are not accessible to the SPI in this mode. In order to protect the flash contents, several operations are required before the SFM mode is successfully invoked.

While operating in SPI Flash Mode (SFM), SPI single-byte transactions are used to write to *FL_BANK[1:0]*. During an SPI single-byte transaction, *SPI_CMD[1:0]* will overwrite the contents of *FL_BANK[1:0]*. This will allow for access of the entire 128 KB Flash memory while operating in SFM on the 71M6541G/71M6542G.

If the SPI port is used for code updates (in lieu of a programmer that uses the ICE port), then a code that disables the flash access via SPI can potentially lock out flash program updates.

Details on the SFM are in 2.5.10 (SPI Slave Port).

2.5.1.2 MPU/CE RAM

The 71M6541D includes 3 KB of static RAM memory on-chip (XRAM) plus 256 bytes of internal RAM in the MPU core. The 71M6541D/F/G and the 71M6542F/G include 5 KB of static RAM memory on-chip (XRAM) plus 256 bytes of internal RAM in the MPU core. The static RAM is used for data storage for both MPU and CE operations.

2.5.1.3 I/O RAM (Configuration RAM)

The I/O RAM can be seen as a series of hardware registers that control basic hardware functions. I/O RAM address space starts at 0x2000. The registers of the I/O RAM are listed in Table 74.

The 71M6541D/F/G and 71M6542F/G include 128 bytes non-volatile RAM memory on-chip in the I/O RAM address space (addresses 0x2800 to 0x287F). This memory section is supported by the voltage applied at VBAT_RTC and the data in it are preserved in BRN, LCD, and SLP modes as long as the voltage at VBAT_RTC is within specification.

2.5.2 Oscillator

The oscillator drives a standard 32.768 kHz watch crystal. This type of crystal is accurate and does not require a high-current oscillator circuit. The oscillator has been designed specifically to handle watch crystals and is compatible with their high impedance and limited power handling capability. The oscillator power dissipation is very low to maximize the lifetime of any battery attached to VBAT_RTC.

Oscillator calibration can improve the accuracy of both the RTC and metering. Refer to 2.5.4, Real-Time Clock (RTC) for more information.

The oscillator is powered from the V3P3SYS pin or from the VBAT_RTC pin, depending on the *V3OK* internal bit (i.e., *V3OK* = 1 if V3P3SYS ≥ 2.8 VDC and *V3OK* = 0 if V3P3SYS < 2.8 VDC). The oscillator requires approximately 100 nA, which is negligible compared to the internal leakage of a battery.

2.5.3 PLL and Internal Clocks

Timing for the device is derived from the 32.768 kHz crystal oscillator output that is multiplied by a PLL by 600 to produce 19.660800 MHz, the master clock (MCK). All on-chip timing, except for the RTC clock, is derived from MCK. Table 41 provides a summary of the clock functions and their controls.

The two general-purpose counter/timers contained in the MPU are controlled by CKMPU (see 2.4.6 Timers and Counters).

The master clock can be boosted to 19.66 MHz by setting the *PLL_FAST* bit = 1 (*I/O RAM 0x2200[4]*) and can be reduced to 6.29 MHz by *PLL_FAST* = 0. The MPU clock frequency CKMPU is determined by another divider controlled by the I/O RAM control field *MPU_DIV[2:0] (I/O RAM 0x2200[2:0])* and can be set to MCK*$2^{-(MPU_DIV+2)}$, where *MPU_DIV[2:0]* may vary from 0 to 4. The 71M654x V3P3SYS supply current is reduced by reducing the MPU clock frequency. When the ICE_E pin is high, the circuit also generates the 9.83 MHz clock for use by the emulator.

The PLL is only turned off in SLP mode or in LCD mode when *LCD_BSTE* is disabled. The *LCD_BSTE* value depends on the setting of the *LCD_VMODE [1:0]* field (see Table 56).

When the part is waking up from SLP or LCD modes, the PLL is turned on in 6.29 MHz mode, and the PLL frequency is not be accurate until the *PLL_OK* flag (*SFR 0xF9[4]*) rises. Due to potential overshoot, the MPU should not change the value of *PLL_FAST* until *PLL_OK* is true.

Table 41: Clock System Summary

Clock	Derived From	Fixed Frequency or Range			Function
		PLL_FAST=1	*PLL_FAST*=0	Controlled by	
OSC	Crystal	32.768 kHz		–	Crystal clock
MCK	Crystal/PLL	19.660800 MHz (600*CK32)	6.291456 MHz (192*CK32)	*PLL_FAST*	Master clock
CKCE	MCK	4.9152 MHz	1.5728 MHz	–	CE clock
CKADC	MCK	4.9152 MHz, 2.4576 MHz	1.572864 MHz, 0.786432 MHz	*ADC_DIV*	ADC clock
CKMPU	MCK	4.9152 MHz … 307.2 kHz	1.572864 MHz… 98.304 kHz	*MPU_DIV[2:0]*	MPU clock
CKICE	MCK	9.8304 MHz… 614.4 kHz	3.145728 MHz … 196.608 kHz	*MPU_DIV[2:0]*	ICE clock
CKOPTMOD	MCK	38.40 kHz	38.6 kHz	–	Optical UART Modulation
CK32	MCK	32.768 kHz		–	32 kHz clock

2.5.4 Real-Time Clock (RTC)

2.5.4.1 RTC General Description

The RTC is driven directly by the crystal oscillator and is powered by either the V3P3SYS pin or the VBAT_RTC pin, depending on the *V3OK* internal bit. The RTC consists of a counter chain and output registers. The counter chain consists of registers for seconds, minutes, hours, day of week, day of month, month, and year. The chain registers are supported by a shadow register that facilitates read and write operations.

Table 42 shows the I/O RAM registers for accessing the RTC.

2.5.4.2 Accessing the RTC

Two bits, *RTC_RD (I/O RAM 0x2890[6]*) and *RTC_WR (I/O RAM 0x2890[7])*, control the behavior of the shadow register.

When *RTC_RD* is low, the shadow register is updated by the RTC after each two milliseconds. When *RTC_RD* is high, this update is halted and the shadow register contents become stationary and are suitable to be read by the MPU. Thus, when the MPU wishes to read the RTC, it freezes the shadow register by setting the *RTC_RD* bit, reads the shadow register, and then lowers the *RTC_RD* bit to let updates to the shadow register resume. Since the RTC clock is only 500Hz, there may be a delay of approximately 2 ms from when the *RTC_RD* bit is lowered until the shadow register receives its first update. Reads to *RTC_RD* continue to return a one until the first shadow update occurs.

When *RTC_WR* is high, the update of the shadow register is also inhibited. During this time, the MPU may overwrite the contents of the shadow register. When *RTC_WR* is lowered, the shadow register is written into the RTC counter on the next 500Hz RTC clock. A change bit is included for each word in the shadow register to ensure that only programmed words are updated when the MPU writes a zero to *RTC_WR*. Reads of *RTC_WR* returns one until the counter has actually been updated by the register.

The sub-second register of the RTC, *RTC_SBSC (I/O RAM 0x2892)*, can be read by the MPU after the one second interrupt and before reaching the next one second boundary. The *RTC_SBSC* register is expressed as a count of 1/128 second periods remaining until the next one second boundary. Writing 0x00 to *RTC_SBSC* resets the counter re-starting the count from 0 to 127. Reading and resetting the sub-second counter can be used as part of an algorithm to accurately set the RTC.

The RTC is capable of processing leap years. Each counter has its own output register. The RTC chain registers are not affected by the reset pin, watchdog timer resets, or by transitions between the battery modes and mission mode.

Table 42: RTC Control Registers

Name	Location	Rst	Wk	Dir	Description
RTCA_ADJ[6:0]	2504[6:0]	64	–	R/W	Register for analog RTC frequency adjustment.
RTC_P[16:14] *RTC_P[13:6]* *RTC_P[5:0]*	289B[2:0] 289C[7:0] 289D[7:2]	4 0 0	4 0 0	R/W	Registers for digital RTC adjustment. 0x0FFBF ≤ *RTC_P* ≤ 0x10040
RTC_Q[1:0]	289D[1:0]	0	0	R/W	Register for digital RTC adjustment.
RTC_RD	2890[6]	0	0	R/W	Freezes the RTC shadow register so it is suitable for MPU reads. When *RTC_RD* is read, it returns the status of the shadow register: 0 = up to date, 1 = frozen.
RTC_WR	2890[7]	0	0	R/W	Freezes the RTC shadow register so it is suitable for MPU write operations. When *RTC_WR* is cleared, the contents of the shadow register written to the RTC counter on the next RTC clock (~500 Hz). When *RTC_WR* is read, it returns 1 as long as *RTC_WR* is set. It continues to return one until the RTC counter is updated.
RTC_FAIL	2890[4]	0	0	R	Indicates that a count error has occurred in the RTC and that the time is not trustworthy. This bit can be cleared by writing a 0.
RTC_SBSC[7:0]	2892[7:0]			R	Time remaining since the last 1 second boundary. LSB = 1/128 second.

2.5.4.3 RTC Rate Control

Two rate adjustment mechanisms are available:

- The first rate adjustment mechanism is an analog rate adjustment, using the I/O RAM register *RTCA_ADJ[6:0] (I/O RAM 0x2504[6:0])*, that trims the crystal load capacitance.
- The second rate adjustment mechanism is a digital rate adjust that affects the way the clock frequency is processed in the RTC.

Setting *RTCA_ADJ[6:0]* to 00 minimizes the load capacitance, maximizing the oscillator frequency. Setting *RTCA_ADJ[6:0]* to 7F maximizes the load capacitance, minimizing the oscillator frequency. The adjustable capacitance is approximately:

$$C_{ADJ} = \frac{RTCA_ADJ}{128} \cdot 16.5pF$$

The precise amount of adjustment depends on the crystal properties, the PCB layout and the value of the external crystal capacitors. The adjustment may occur at any time, and the resulting clock frequency should be measured over a one-second interval.

The second rate adjustment is digital, and can be used to adjust the clock rate up to ±988ppm, with a resolution of 3.8 ppm (±1.9 ppm). Note that 3.8 ppm corresponds to 1-LSB of the 19-bit quantity formed by *4*RTCP+RTCQ* and 1.9 ppm corresponds to ½-LSB. The rate adjustment is implemented starting at the next second-boundary following the adjustment. Since the LSB results in an adjustment every four seconds, the frequency should be measured over an interval that is a multiple of four seconds.

The clock rate is adjusted by writing the appropriate values to *RTC_P[16:0]* (*I/O RAM 0x289B[2:0], 0x289C, 0x289D[7:2]*) and *RTC_Q[1:0] (I/O RAM 0x289D[1:0]).* Updates to RTC rate adjust registers, *RTC_P* and *RTC_Q*, are done through the shadow register described above. The new values are loaded into the counters when *RTC_WR (I/O RAM 0x2890[7]*) is lowered.

The default frequency is 32,768 RTCLK cycles per second. To shift the clock frequency by Δ ppm, *RTC_P* and *RTC_Q* are calculated using the following equation:

$$4 \cdot \mathrm{RTC_P} + \mathrm{RTC_Q} = \mathit{floor}\left(\frac{32768 \cdot 8}{1 + \Delta \cdot 10^{-6}} + 0.5\right)$$

Conversely, the amount of ppm shift for a given value of *4RTC_P+RTC_Q* is:

$$\Delta\ (ppm) = \left(\frac{32768 \cdot 8}{4 * RTC_P + RTC_Q} - 1\right) 10^6$$

For example, for a shift of -988 ppm, 4·*RTC_P* + *RTC_Q* = 262403 = 0x40103. *RTC_P* = 0x10040, and *RTC_Q* = 0x03. The default values of *RTC_P* and *RTC_Q*, corresponding to zero adjustment, are 0x10000 and 0x0, respectively.

Two settings for the TMUX2OUT test pin, PULSE_1S and PULSE_4S, are available for measuring and calibrating the RTC clock frequency. These are waveforms of approximately 25% duty cycle with 1s or 4s period.

✓ Default values for *RTCA_ADJ*, *RTC_P* and *RTC_Q* should be nominal values, at the center of the adjustment range. Un-calibrated extreme values (zero, for example) can cause incorrect operation.

If the crystal temperature coefficient is known, the MPU can integrate temperature and correct the RTC time as necessary. Alternatively, the characteristics can be loaded into an NV RAM and the *OSC_COMP* bit (*I/O RAM 0x28A0[5]*) may be set. In this case, the oscillator is adjusted automatically, even in SLP mode. See the Real Time RTC Temperature Compensation section for details.

2.5.4.4 RTC Temperature Compensation

The 71M6541D/F/G and 71M6542F/G can be configured to regularly measure die temperature, including in SLP and LCD modes and while the MPU is halted. If enabled by the *OSC_COMP* bit, the temperature information is automatically used to correct for the temperature variation of the crystal. A table look-up method is used which generates the required digital compensation without involvement from the MPU. Storage for the look-up table is in a dedicated 128 byte NV RAM.

Table 43 shows the I/O RAM registers involved in automatic RTC temperature compensation.

Table 43: I/O RAM Registers for RTC Temperature Compensation

Name	Location	Rst	Wk	Dir	Description
OSC_COMP	28A0[5]	0	0	R/W	Enables the automatic update of *RTC_P* and *RTC_Q* every time the temperature is measured.
STEMP[10:3] *STEMP[2:0]*	2881[7:0] 2882[7:5]	–	–	R	The result of the temperature measurement (10-bits of magnitude data plus a sign bit). The complete *STEMP[10:0]* value can be read and shifted right in a single 16-bit read operation as shown in the following code fragment. volatile int16_t xdata STEMP _at_0x2881; fa = (float)(STEMP/32);
LKPADDR[6:0]	2887[6:0]	0	0	R/W	The address for reading and writing the RTC lookup RAM.
LKPAUTOI	2887[7]	0	0	R/W	Auto-increment flag. When set, *LKPADDR[6:0]* auto increments every time *LKP_RD* or *LKP_WR* is pulsed. The incremented address can be read at *LKPADDR[6:0]*.
LKPDAT[7:0]	2888[7:0]	0	0	R/W	The data for reading and writing the RTC lookup RAM.
LKP_RD *LKP_WR*	2889[1] 2889[0]	0 0	0 0	R/W R/W	Strobe bits for the RTC lookup RAM read and write. When set, the *LKPADDR* and *LKPDAT* registers are used in a read or write operation. When a strobe is set, it stays set until the operation completes, at which time the strobe is cleared and *LKPADDR* is incremented if *LKPAUTOI* is set.

Referring to Figure 17, the table lookup method uses the 10-bits plus sign-bit value in *STEMP[10:0]* right-shifted by two bits to obtain an 8-bit plus sign value (i.e., NV RAM Address = STEMP/4). A limiter ensures that the resulting look-up address is in the 6-bit plus sign range of -64 to +63 (decimal). The 8-bit NV RAM content pointed to by the address is added as a 2's complement value to 0x40000, the nominal value of 4**RTC_P* + *RTC_Q*.

Refer to 2.5.4.3 RTC Rate Control for information on the rate adjustments performed by registers *RTC_P[16:0] (I/O RAM 0x289B[2:0], 0x289C, 0x289D[7:2]*) and *RTC_Q[1:0] (I/O RAM 0x2891[1:0]*. The 8-bit values loaded in to NV RAM must be scaled correctly to produce rate adjustments that are consistent with the equations given in 2.5.4.3 RTC Rate Control for *RTC_P* and *RTC_Q*. Note that the sum of the 8-bit 2's complement value looked-up and 0x40000 form a 19-bit value, which is equal to 4**RTC_P*+*RTC_Q*, as shown in Figure 17. The output of the Temperature Compensation is automatically loaded into the *RTC_P[16:0]* and *RTC_Q[1:0]* locations after each look-up and summation operation.

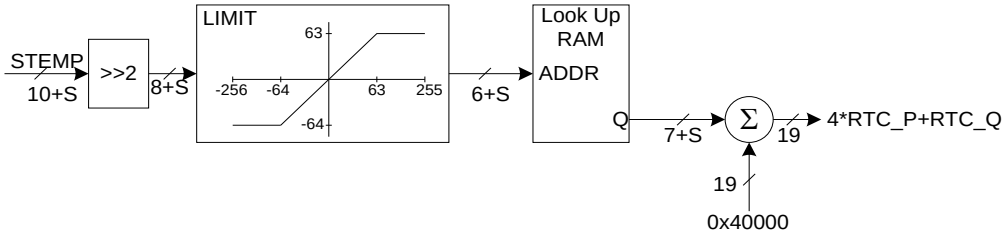

Figure 17: Automatic Temperature Compensation

The 128 NV RAM locations are organized in 2's complement format as shown in Table 44. As mentioned above, the *STEMP[10:0]* digital temperature values are scaled such that the corresponding NV RAM addresses are equal to *STEMP[10:0]*/4 (limited in the range of -64 to +63). See 2.5.5 71M654x Temperature Sensor on page 56 for the equations to calculate temperature in degrees °C from the *STEMP[10:0]* reading.

The temperature equation is used to calculate the two temperature columns in Table 44 (the second column and the rightmost column). The second column uses the full 11-bit values of *STEMP[10:0]***,** while the values in the rightmost column are calculated using the post-limiter (6+S) values multiplied by 4. Since each look-up table address step corresponds to a 4 x 0.325 °C temperature step, two is added to the post-limiter 6+S value after multiplying by 4 to calculate the temperature values in the rightmost column. This method ensures that the compensation data is loaded into the look-up table in a manner that minimizes quantization error. Table 44 shows the numerical values corresponding to each node in Figure 17. The values of *STEMP[10:0]* outside the -256 to +255 range are not shown in this table. The limiter output is confined to the range of -64 to +63, which is directly the desired address of the 128-byte look-up table. The rightmost column gives the nominal temperature corresponding to each address cell in the 128-byte compensation table

Table 44: NV RAM Temperature Table Structure

STEMP[10:0] (10+S) (decimal)	Temp (°C) (Equation)	STEMP[10:0]>>2 (8+S) (decimal)	Limiter Output (6+S) (decimal)	Temp (°C) (LU Table)
-256	-61.71	-64	-64	-61.06
-255	-61.39			
-254	-61.06			
-253	-60.73			
…	…	…	…	…
-4	20.69	-1	-1	21.35
-3	21.02			
-2	21.35			
-1	21.67			

STEMP[10:0] (10+S) (decimal)	Temp (°C) (Equation)	STEMP[10:0]>>2 (8+S) (decimal)	Limiter Output (6+S) (decimal)	Temp (°C) (LU Table)
0	22.00	0	0	22.65
1	22.33			
2	22.65			
3	22.98			
4	23.31	1	1	23.96
5	23.64			
6	23.96			
7	24.29			
…	…	…	…	…
252	104.40	63	63	105.06
253	104.73			
254	105.06			
255	105.39			

For proper operation, the MPU must load the lookup table with values that reflect the crystal properties with respect to temperature, which is typically done once during initialization. Since the lookup table is not directly addressable, the MPU uses the following procedure to load the entire NV RAM table:

1. Set the *LKPAUTOI* bit (*I/O RAM 0x2887[7]*) to enable address auto-increment.
2. Write zero into the I/O RAM register *LKPADDR[6:0]* (*I/O RAM 0x2887[6:0]*).
3. Write the 8-bit datum into I/O RAM register *LKPDAT* (*I/O RAM 0x2888*).
4. Set the *LKP_WR* bit (*I/O RAM 0x2889[0]*) to write the 8-bit datum into NV_RAM
5. Wait for *LKP_WR* to clear (*LKP_WR* auto-clears when the data has been copied to NV RAM).
6. Repeat steps 3 through 5 until all data has been written to NV RAM.

The NV RAM table can also be read by writing a 1 into the *LKP_RD* bit (*I/O RAM 0x2889[1]*). The process of reading from and writing to the NV RAM is accelerated by setting the *LKPAUTOI* bit (*I/O RAM 0x2887[7]*). When *LKPAUTOI* is set, *LKPADDR[6:0]* auto-incremented every time *LKP_RD* or *LKP_WR* is pulsed. It is also possible to perform random access of the NV RAM by writing a 0 to the *LKPAUTOI* bit and loading the desired address into *LKPADDR[6:0]*.

If the oscillator temperature compensation feature is not being used, it is possible to use the NV RAM storage area as ordinary NV storage space using the procedure described above to read and write NV RAM data. In this case, keep the *OSC_COMP* bit (*I/O RAM 0x28A0[5]*) reset to disable the automatic oscillator temperature compensation feature.

2.5.4.5 RTC Interrupts

The RTC generates interrupts each second and each minute. These interrupts are called *RTC_1SEC* and *RTC_1MIN*. In addition, the RTC functions as an alarm clock by generating an interrupt when the minutes and hours registers both equal their respective target counts as defined in Table 45. The alarm clock interrupt is called *RTC_T*. All three interrupts appear in the MPU's external interrupt 6. See Table 33 in the interrupt section for the enable bits and flags for these interrupts.

The target registers for minutes and hours are listed in Table 45.

Table 45: I/O RAM Registers for RTC Interrupts

Name	Location	Rst	Wk	Dir	Description
RTC_TMIN[5:0]	289E[5:0]	0	0	R/W	The target minutes register. See *RTC_THR[4:0]* below.
RTC_THR[4:0]	289F[4:0]	0	0	R/W	The target hours register. The *RTC_T* interrupt occurs when *RTC_MIN* becomes equal to *RTC_TMIN* and *RTC_HR* becomes equal to *RTC_THR*.

2.5.5 71M654x Temperature Sensor

The 71M654x includes an on-chip temperature sensor for determining the temperature of its bandgap reference. The primary use of the temperature data is to determine the magnitude of compensation required to offset the thermal drift in the system for the compensation of current, voltage and energy measurement and the RTC. See 4.7 Metrology Temperature Compensation on page 97. Also see 2.5.4.4 RTC Temperature Compensation on page 53.

Unlike earlier generation Maxim SoCs, the 71M654x does not use the ADC to read the temperature sensor. Instead, it uses a technique that is operational in SLP and LCD mode, as well as BRN and MSN modes. This means that the temperature sensor can be used to compensate for the frequency variation of the crystal, even in SLP mode while the MPU is halted. See 2.5.4.4 RTC Temperature Compensation on page 53.

In MSN and BRN modes, the temperature sensor is awakened on command from the MPU by setting the *TEMP_START (I/O RAM 0x28B4[6])* control bit. The MPU must wait for the *TEMP_START* bit to clear before reading *STEMP[10:0]* and before setting the *TEMP_START* bit once again. In SLP and LCD modes, it is awakened at a regular rate set by *TEMP_PER[2:0] (I/O RAM 0x28A0[2:0]).*

The result of the temperature measurement can be read from the two I/O RAM locations *STEMP[10:3]* (*I/O RAM 0x2881)* and *STEMP[2:0] (I/O RAM 0x2882[7:5]).* Note that both of these I/O RAM locations must be read and properly combined to form the *STEMP[10:0]* 11-bit value (see *STEMP* in Table 46). The resulting 11-bit value is in 2's complement form and ranges from -1024 to +1023 (decimal). The equations below are used to calculate the sensed temperature from the 11-bit *STEMP[10:0]* reading.

The equations below are used to calculate the sensed temperature. The first equation applies when the 71M654x is in MSN mode and *TEMP_PWR* = 1. The second equation applies when the 71M654x is in BRN mode, and in this case, the *TEMP_PWR* and *TEMP_BSEL* bits must both be set to the same value, so that the battery that supplies the temperature sensor is also the battery that is measured and reported in *BSENSE*. Thus, the second equation requires reading *STEMP* and *BSENSE*. In the second equation, *BSENSE* (the sensed battery voltage) is used to obtain a more accurate temperature reading when the IC is in BRN mode.

For the 71M654x in MSN Mode (with *TEMP_PWR* = 1):

$$Temp(°C) = 0.325 \cdot STEMP + 22$$

For the 71M654x in BRN Mode, (with *TEMP_PWR*=*TEMP_BSEL*):

$$Temp(^{o}C) = 0.325 \cdot STEMP + 0.00218 \cdot BSENSE^{2} - 0.609 \cdot BSENSE + 64.4$$

Table 46 shows the I/O RAM registers used for temperature and battery measurement.

✓ If *TEMP_PWR* selects *VBAT_RTC* when the battery is nearly discharged, the temperature measurement may not finish. In this case, firmware may complete the measurement by selecting V3P3D (*TEMP_PWR* = 1).

Table 46: I/O RAM Registers for Temperature and Battery Measurement

Name	Location	Rst	Wk	Dir	Description
TBYTE_BUSY	28A0[3]	0	0	R	Indicates that hardware is still writing the 0x28A0 byte. Additional writes to this byte are locked out while it is one. Write duration could be as long as 6 ms.
TEMP_PER[2:0]	28A0[2:0]	0	–	R/W	Sets the period between temperature measurements. Automatic measurements can be enabled in any mode (MSN, BRN, LCD, or SLP). ***TEMP_PER*** / **Time** 0 / Manual updates (see *TEMP_START*) 1-6 / 2 ^ (3+*TEMP_PER*) (seconds) 7 / Continuous

Name	Location	Rst	Wk	Dir	Description
TEMP_BAT	28A0[4]	0	–	R/W	Causes VBAT to be measured whenever a temperature measurement is performed.
TEMP_START	28B4[6]	0	–	R/W	*TEMP_PER[2:0]* must be zero in order for *TEMP_START* to function. If *TEMP_PER[2:0]* = 0, then setting *TEMP_START* starts a temperature measurement. Ignored in SLP and LCD modes. Hardware clears *TEMP_START* when the temperature measurement is complete. The MPU must wait for *TEMP_START* to clear before reading *STEMP[10:0]* and before setting *TEMP_START* again.
TEMP_PWR	28A0[6]	0	–	R/W	Selects the power source for the temperature sensor: 1 = V3P3D, 0 = VBAT_RTC. This bit is ignored in SLP and LCD modes, where the temperature sensor is always powered by VBAT_RTC.
TEMP_BSEL	28A0[7]	0	–	R/W	Selects which battery is monitored by the temperature sensor: 1 = VBAT, 0 = VBAT_RTC
TEMP_TEST[1:0]	2500[1:0]	0	–	R/W	Test bits for the temperature monitor VCO. *TEMP_TEST* must be 00 in regular operation. Any other value causes the VCO to run continuously with the control voltage described below. *TEMP_TEST* — **Function** 00 — Normal operation 01 — Reserved for factory test 1X — Reserved for factory test
STEMP[10:3] *STEMP[2:0]*	2881[7:0] 2882[7:5]			R R	The result of the temperature measurement. To correctly form *STEMP[10:0]*, the MPU must read 0x2881[7:0], shift it left by three bit positions (padding LSBs with zeros), then read 0x2882[7:5], shift it right by 5-bits (padding the 5 MSBs with zeros), and then logically OR the two quantities together.
BSENSE[7:0]	2885[7:0]	–	–	R	The result of the battery measurement.
BCURR	2704[3]	0	0	R/W	Connects a 100 µA load to the battery selected by *TEMP_BSEL*.

Refer to the *71M6xxx Data Sheet* for information on reading the temperature sensor in the 71M6x01 devices.

2.5.6 71M654x Battery Monitor

The 71M654x temperature measurement circuit can also monitor the batteries at the VBAT and VBAT_RTC pins. The battery to be tested (i.e., VBAT or VBAT_RTC pin) is selected by *TEMP_BSEL (I/O RAM 0x28A0[7])*.

When *TEMP_BAT* (*I/O RAM 0x28A0[4]*) is set, a battery measurement is performed as part of each temperature measurement. The value of the battery reading is stored in register *BSENSE[7:0] (I/O RAM 0x2885)*. The following equation is used to calculate the voltage measured on the VBAT pin (or VBAT_RTC pin) from the *BSENSE[7:0]* and *STEMP[10:0]* values. The result of the equation below is in volts.

$$VBAT(orVBAT_RTC) = 3.293V + (BSENSE[7:0] - 142) \cdot 0.0246V + STEMP[10:0] \cdot 0.000276V$$

In MSN mode, a 100 µA de-passivation load can be applied to the selected battery (i.e., selected by the *TEMP_BSEL* bit) by setting the *BCURR (I/O RAM 0x2704[3]*) bit. Battery impedance can be measured by taking a battery measurement with and without *BCURR*. Regardless of the *BCURR* bit setting, the battery load is never applied in BRN, LCD, and SLP modes.

Refer to the *71M6xxx Data Sheet* for information on reading the VCC sensor in the 71M6x01 devices.

2.5.7 UART and Optical Interface

The 71M6541D/F/G and 71M6542F/G provide two asynchronous interfaces, UART0 and UART1. Both can be used to connect to AMR modules, user interfaces, etc., and also support a mechanism for programming the on-chip flash memory.

Referring to Figure 19, UART1 includes an interface to implement an IR/optical port. The pin OPT_TX is designed to directly drive an external LED for transmitting data on an optical link. The pin OPT_RX has the same threshold as the RX pin, but can also be used to sense the input from an external photo detector used as the receiver for the optical link. OPT_TX and OPT_RX are connected to a dedicated UART port (UART1).

The OPT_TX and OPT_RX pins can be inverted with configuration bits *OPT_TXINV (I/O RAM 0x2456[0])* and *OPT_RXINV (I/O RAM 0x2457[1])*, respectively. Additionally, the OPT_TX output may be modulated at 38 kHz. Modulation is available in MSN and BRN modes (see Table 67). The *OPT_TXMOD* bit (*I/O RAM 0x2456[1]*) enables modulation. The duty cycle is controlled by *OPT_FDC[1:0] (I/O RAM 0x2457[5:4])* , which can select 50%, 25%, 12.5%, and 6.25% duty cycle. A 6.25% duty cycle means that OPT_TX is low for 6.25% of the period.

When not needed for UART1, OPT_TX can alternatively be configured as SEGDIO51. Configuration is via the *OPT_TXE[1:0] (I/O RAM 0x2456[3:2])* field *and LCD_MAP[51] (I/O RAM 0x2405[0]).* The *OPT_TXE[1:0]* field allows the MPU to select VPULSE, WPULSE, SEGDIO51 or the output of the pulse modulator to be sourced onto the OPT_TX pin. Likewise, the OPT_RX pin can alternately be configured as SEGDIO55, and its control is *OPT_RXDIS (I/O RAM 0x2457[2])* and *LCD_MAP[55] (I/O RAM 0x2405[4])*.

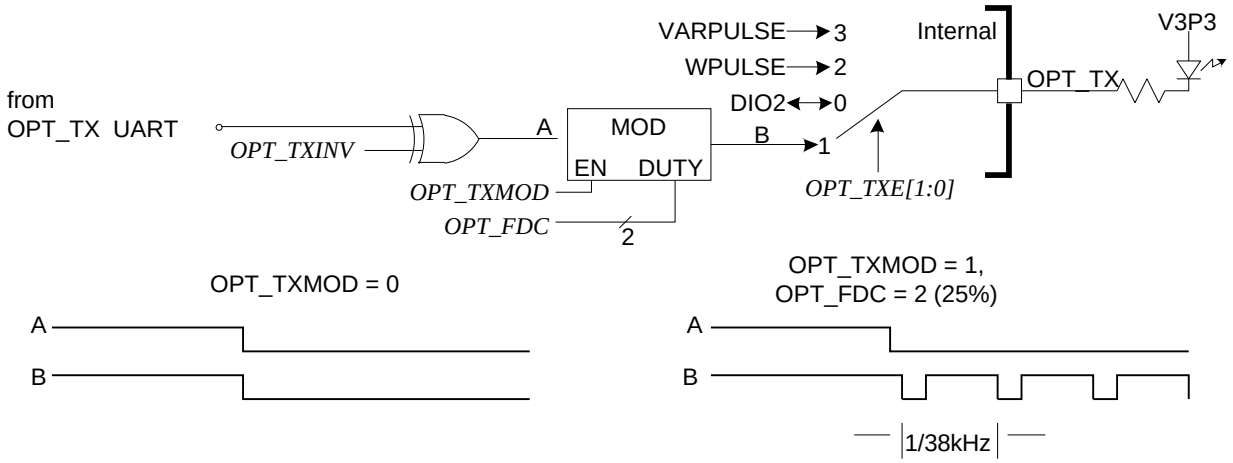

Figure 18: Optical Interface

Bit Banged Optical UART (Third UART)

As shown in Figure 19, the 71M654x can also be configured to drive the optical UART with a DIO signal in a bit banged configuration. When control bit *OPT_BB* (*I/O RAM 0x2022[0]*) is set, the optical port is driven by DIO5 and the SEGDIO5 pin is driven by UART1_TX. This configuration is typically used when the two dedicated UARTs must be connected to high speed clients and a slower optical UART is permissible.

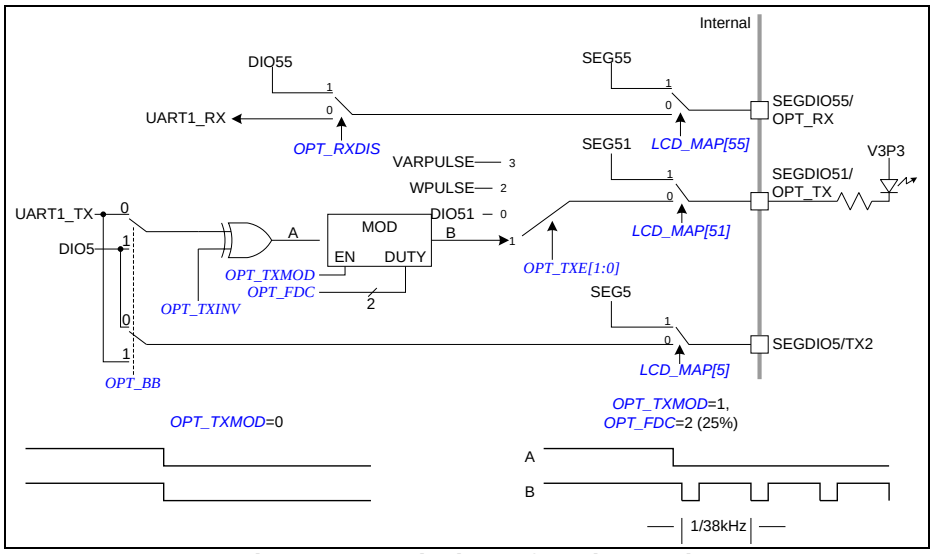

Figure 19: Optical Interface (UART1)

2.5.8 Digital I/O and LCD Segment Drivers

2.5.8.1 General Information

The 71M6541D/F/G and 71M6542F/G combine most DIO pins with LCD segment drivers. Each SEG/DIO pin can be configured as a DIO pin or as a segment (SEG) driver pin.

On reset or power-up, all DIO pins are DIO inputs (except for SEGDIO0-15, see caution note below) until they are configured as desired under MPU control. The pin function can be configured by the I/O RAM registers *LCD_MAPn (0x2405 – 0x240B)*. Setting the bit corresponding to the pin in *LCD_MAPn to* 1 configures the pin for LCD, setting *LCD_MAPn* to 0 configures it for DIO.

CAUTION

After reset or power up, pins SEGDIO0 through SEGDIO15 are initially DIO outputs, but are disabled by *PORT_E* = 0 *(I/O RAM 0x270C[5]*) to avoid unwanted pulses during reset. After configuring pins SEGDIO0 through SEGDIO15 the MPU must enable these pins by setting *PORT_E*.

Once a pin is configured as DIO, it can be configured independently as an input or output. For SEGDIO0 to SEGDIO15, this is done with the SFR registers *P0 (SFR 0x80), P1 (SFR 0x90)*, *P2 (SFR 0xA0)* and *P3 (SFR 0xB0)*, as shown in Table 48 (71M6541D/F/G) and Table 52 (71M6542F/G).

The PB pin is a dedicated digital input and is not part of the SEGDIO system.

The CE features pulse counting registers and each pulse counter interrupt output is internally routed to the pulse interrupt logic. Thus, no routing of pulse signals to external pins is required in order to generate pulse interrupts. See interrupt source No. 2 in Figure 16.

A 3-bit configuration word, I/O RAM register *DIO_Rn* (*I/O RAM 0x2009[2:0]* through *0x200E[6:4]*) can be used for pins SEGDIO2 through SEGDIO11 (when configured as DIO) and PB to individually assign an internal resource such as an interrupt or a timer control (*DIO_RPB[2:0]*, *I/O RAM 0x2450[2:0]*, configures the PB pin). This way, DIO pins can be tracked even if they are configured as outputs. Table 47 lists the internal resources which can be assigned using *DIO_R2[2:0]* through *DIO_R11[2:0]* and *DIO_RPB[2:0]*. If more than one input is connected to the same resource, the resources are combined using a logical OR.

Table 47: Selectable Resources using the *DIO_Rn[2:0]* Bits

Value in *DIO_Rn[2:0]*	Resource Selected for SEGDIOn or PB Pin
0	None
1	Reserved
2	T0 (counter0 clock)
3	T1 (counter1 clock)
4	High priority I/O interrupt (INT0)
5	Low priority I/O interrupt (INT1)
Note: Resources are selectable only on SEGDIO2 through SEGDIO11 and the PB pin. See Table 48 (71M6541D/F/G) and Table 52 (71M6542F/G).	

When driving LEDs, relay coils etc., the DIO pins should sink the current into GNDD (as shown in Figure 20, right), not source it from V3P3D (as shown in Figure 20, left). This is due to the resistance of the internal switch that connects V3P3D to either V3P3SYS or VBAT. See 6.4.6 V3P3D Switch on page 144.

Sourcing current in or out of DIO pins other than those dedicated for wake functions, for example with pull-up or pull-down resistors, must be avoided. Violating this rule leads to increased quiescent current in sleep and LCD modes.

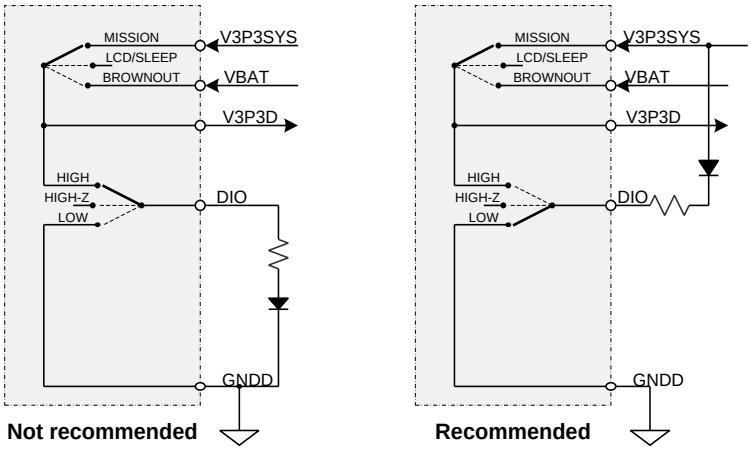

Figure 20: Connecting an External Load to DIO Pins

2.5.8.2 Digital I/O for the 71M6541D/F/G

A total of 32 combined SEG/DIO pins plus 5 SEG outputs are available for the 71M6541D/F/G. These pins can be categorized as follows:

17 combined SEG/DIO segment pins:

- SEGDIO4…SEGDIO5 (2 pins)
- SEGDIO9…SEGDIO14 (6 pins)
- SEGDIO19…SEGDIO25 (7 pins)
- SEGDIO44…SEGDIO45 (2 pins)

15 combined SEG/DIO segment pins shared with other functions:

- SEGDIO0/WPULSE, SEGDIO1/VPULSE (2 pins)
- SEGDIO2/SDCK, SEGDIO3/SDATA (2 pins)
- SEGDIO6/XPULSE, SEGDIO7/YPULSE (2 pins)
- SEGDIO8/DI (1 pin)
- SEGDIO26/COM5, SEGDIO27/COM4 (2 pins)
- SEGDIO36/SPI_CSZ…SEGDIO39/SPI_CKI (4 pins)
- SEGDIO51/OPT_TX, SEGDIO55/OPT_RX (2 pins)

5 dedicated SEG segment pins are available:

- ICE Inteface pins: SEG48/E_RXTX, SEG49/E_TCLK, SEG50/E_RST (3 pins)
- Test Port pins: SEG46/TMUX2OUT, SEG47/TMUXOUT (2 pins)

There are four dedicated common segment outputs (COM0…COM3) plus the two additional shared common segment outputs that are listed under combined SEG/DIO shared pins (SEGDIO26/COM5, SEGDIO27/COM4).

Thus, in a configuration where none of these pins are used as DIOs, there can be up to 37 LCD segment pins with 4 commons, or 35 LCD segment pins with 6 commons. And in a configuration where LCD segment pins are not used, there can be up to 32 DIO pins.

The configuration for pins SEGDIO19 to SEGDIO27 is shown in Table 49, and the configuration for pins SEGDIO36-39 and SEGDIO44-45 is shown in Table 50. SEG46 to SEG50 cannot be configured for DIO. The configuration for pins SEGDIO51 and SEGDIO55 is shown in Table 51.

Table 48: Data/Direction Registers for SEGDIO0 to SEGDIO14 (71M6541D/F/G)

SEGDIO	**0**	**1**	**2**	**3**	**4**	**5**	**6**	**7**	**8**	**9**	**10**	**11**	**12**	**13**	**14**	**15**
Pin #	**31**	**30**	**29**	**28**	**27**	**26**	**25**	**24**	**23**	**22**	**21**	**20**	**19**	**18**	**17**	**–**
Configuration: 0 = DIO, 1 = LCD	0	1	2	3	4	5	6	7	0	1	2	3	4	5	6	–
	LCD_MAP[7:0] *(I/O RAM 0x240B)*								***LCD_MAP[14:8]*** *(I/O RAM 0x240A)*							
SEG Data Register	0	1	2	3	4	5	6	7	8	9	10	11	12	13	14	–
	LCD_SEG0[5:0] to ***LCD_SEG14[5:0]*** *(I/O RAM 0x2410[5:0]* to *0x241E[5:0]*															
DIO Data Register	0	1	2	3	0	1	2	3	0	1	2	3	0	1	2	–
	P0 *(SFR 0x80)*				***P1*** *(SFR 0x90)*				***P2*** *(SFR 0xA0)*				***P3*** *(SFR 0xB0)*			
Direction Register: 0 = input, 1 = output	4	5	6	7	4	5	6	7	4	5	6	7	4	5	6	–
	P0 *(SFR 0x80)*				***P1*** *(SFR 0x90)*				***P2*** *(SFR 0xA0)*				***P3*** *(SFR 0xB0)*			
Internal Resources Configurable (see Table 47)	–	–	Y	Y	Y	Y	Y	Y	Y	Y	Y	Y	–	–	–	–

Table 49: Data/Direction Registers for SEGDIO19 to SEGDIO27 (71M6541D/F/G)

SEGDIO	**–**	**–**	**–**	**19**	**20**	**21**	**22**	**23**	**24**	**25**	**26**	**27**	**–**	**–**	**–**	**–**
Pin #	**–**	**–**	**–**	**16**	**15**	**14**	**13**	**12**	**11**	**10**	**9**	**8**	**–**	**–**	**–**	**–**
Configuration: 0 = DIO, 1 = LCD	**–**	**–**	**–**	3	4	5	6	7	0	1	2	3	**–**	**–**	**–**	**–**
	LCD_MAP[23:19] *(I/O RAM 0x2409)*								***LCD_MAP[27:24]*** *(I/O RAM 0x2408)*							
SEG Data Register	**–**	**–**	**–**	19	20	21	22	23	24	25	26	27	**–**	**–**	**–**	**–**
	LCD_SEGDIO19[5:0] *to* ***LCD_SEGDIO27[5:0]*** *(I/O RAM 0x2423[5:0]* to *0x242C[5:0])*															
DIO Data Register	**–**	**–**	**–**	19	20	21	22	23	24	25	26	27	**–**	**–**	**–**	**–**
	LCD_SEGDIO19[0] *to* ***LCD_SEGDIO27[0]*** *(I/O RAM 0x2423[0]* to *0x242C[0])*															
Direction Register: 0 = input, 1 = output	**–**	**–**	**–**	19	20	21	22	23	24	25	26	27	**–**	**–**	**–**	**–**
	LCD_SEGDIO19[1] *to* ***LCD_SEGDIO27[1]*** *(I/O RAM 0x2423[1]* to *0x242C[1])*															

Table 50: Data/Direction Registers for SEGDIO36-39 to SEGDIO44-45 (71M6541D/F/G)

SEGDIO	–	–	–	–	**36**	**37**	**38**	**39**	–	–	–	–	**44**	**45**
Pin #	–	–	–	–	**3**	**2**	**1**	**64**	–	–	–	–	**63**	**62**
Configuration: 0 = DIO, 1 = LCD	–	–	–	–	4	5	6	7	–	–	–	–	4	5
	LCD_MAP[39:36] *(I/O RAM 0x2407)*								***LCD_MAP[45:44]*** *(I/O RAM 0x2406)*					
SEG Data Register	–	–	–	–	36	37	38	39	–	–	–	–	44	45
	LCD_SEGDIO36[5:0] to ***LCD_SEGDIO45[5:0]*** *(I/O RAM 0x2434-2437[5:0] to 0x243C-243D[5:0])*													
DIO Data Register	–	–	–	–	36	37	38	39	–	–	–	–	44	45
	LCD_SEGDIO32[0] to ***LCD_SEGDIO45[0]*** *(I/O RAM 0x2434-2437[0] to 0x243C-243D[0])*													
Direction Register: 0 = input, 1 = output	–	–	–	–	36	37	38	39	–	–	–	–	44	45
	LCD_SEGDIO32[1] to ***LCD_SEGDIO45[1]*** *(I/O RAM 0x2434-2437[1] to 0x243C-243D[1])*													

Table 51: Data/Direction Registers for SEGDIO51 and SEGDIO55 (71M6541D/F/G)

SEGDIO	**51**	**–**	**–**	**–**	**55**	**–**	**–**	**–**
Pin #	**33**	**–**	**–**	**–**	**32**	**–**	**–**	**–**
Configuration: 0 = DIO, 1 = LCD	3	**–**	**–**	**–**	7	**–**	**–**	**–**
	LCD_MAP[55], LDC_MAP[51] *(I/O RAM 0x2405)*							
SEG Data Register	51	**–**	**–**	**–**	55	**–**	**–**	**–**
	LCD_SEGDIO51[5:0], ***LCD_SEGDIO55[5:0]*** *(I/O RAM 0x2443[5:0] and 0x2447[5:0])*							
DIO Data Register	51	**–**	**–**	**–**	55	**–**	**–**	**–**
	LCD_SEGDIO51[0] to ***LCD_SEGDIO55[0]*** *(I/O RAM 0x2443[0] and 0x2447[0])*							
Direction Register: 0 = input, 1 = output	51	**–**	**–**	**–**	55	**–**	**–**	**–**
	LCD_SEGDIO51[1] to ***LCD_SEGDIO55[1]*** *(I/O RAM 0x2443[1] and 0x2447[1])*							

2.5.8.3 Digital I/O for the 71M6542F/G

A total of 55 combined SEG/DIO pins are available for the 71M6542D/F. These pins can be categorized as follows:

36 combined DIO/LCD segment pins:

- SEGDIO4…SEGDIO5 (2 pins)
- SEGDIO9…SEGDIO25 (17 pins)
- SEGDIO28…SEGDIO35 (8 pins)
- SEGDIO40…SEGDIO45 (6 pins)
- SEGDIO52…SEGDIO54 (3 pins)

15 combined DIO/LCD segment pins shared with other functions:

- SEGDIO0/WPULSE, SEGDIO1/VPULSE (2 pins)
- SEGDIO2/SDCK, SEGDIO3/SDATA (2 pins)
- SEGDIO6/XPULSE, SEGDIO7/YPULSE (2 pins)
- SEGDIO8/DI (1 pin)
- SEGDIO26/COM5, SEGDIO27/COM4 (2 pins)
- SEGDIO36/SPI_CSZ…SEGDIO39/SPI_CKI (4 pins)
- SEGDIO51/OPT_TX, SEGDIO55/OPT_RX (2 pins)

5 dedicated SEG segment pins are available:

- ICE Inteface pins: SEG48/E_RXTX, SEG49/E_TCLK, SEG50/E_RST (3 pins)
- Test Port pins: SEG46/TMUX2OUT, SEG47/TMUXOUT (2 pins)

There are four dedicated common segment outputs (COM0…COM3) plus the two additional shared common segment outputs that are listed under combined SEG/DIO shared pins (SEGDIO26/COM5, SEGDIO27/COM4).

Thus, in a configuration where none of these pins are used as DIOs, there can be up to 55 LCD segment pins with 4 commons, or 54 LCD segment pins with 6 commons. And in a configuration where LCD segment pins are not used, there can be up to 50 DIO pins.

Example: SEGDIO12 (see pin 32 in Table 52) is configured as a DIO output pin with a value of 1 (high) by writing 0 to bit 4 of *LCD_MAP[15:8]*, and writing 1 to both *P3[4]and P3[0]*. The same pin is configured as an LCD driver by writing 1 to bit 4 of *LCD_MAP[15:8]*. The display information is written to bits 0 to 5 of *LCD_SEG12*.

The configuration for pins SEGDIO16 to SEGDIO31 is shown in Table 53, the configuration for pins SEGDIO32 to SEGDIO45 is shown in Table 54. SEG46 through SEG50 cannot be configured as DIO pins. The configuration for pins SEGDIO51 to SEGDIO55 is shown in Table 55.

Table 52: Data/Direction Registers for SEGDIO0 to SEGDIO15 (71M6542F/G)

SEGDIO	**0**	**1**	**2**	**3**	**4**	**5**	**6**	**7**	**8**	**9**	**10**	**11**	**12**	**13**	**14**	**15**
Pin #	**45**	**44**	**43**	**42**	**41**	**39**	**38**	**37**	**36**	**35**	**34**	**33**	**32**	**31**	**30**	**29**
Configuration: 0 = DIO, 1 = LCD	0	1	2	3	4	5	6	7	0	1	2	3	4	5	6	7
	LCD_MAP[7:0] *(I/O RAM 0x240B)*								***LCD_MAP[15:8]*** *(I/O RAM 0x240A)*							
SEG Data Register	0	1	2	3	4	5	6	7	8	9	10	11	12	13	14	15
	LCD_SEG0[5:0] to ***LCD_SEG15[5:0]*** *(I/O RAM 0x2410[5:0]* to *0x241F[5:0]*															
DIO Data Register	0	1	2	3	0	1	2	3	0	1	2	3	0	1	2	3
	P0 *(SFR 0x80)*				***P1*** *(SFR 0x90)*				***P2*** *(SFR 0xA0)*				***P3*** *(SFR 0xB0)*			
Direction Register: 0 = input, 1 = output	4	5	6	7	4	5	6	7	4	5	6	7	4	5	6	7
	P0 *(SFR 0x80)*				***P1*** *(SFR 0x0)*				***P2*** *(SFR 0xA0)*				***P3*** *(SFR 0xB0)*			
Internal Resources Configurable (see Table 47)	–	–	Y	Y	Y	Y	Y	Y	Y	Y	Y	Y	–	–	–	–

Table 53: Data/Direction Registers for SEGDIO16 to SEGDIO31 (71M6542F/G)

SEGDIO	**16**	**17**	**18**	**19**	**20**	**21**	**22**	**23**	**24**	**25**	**26**	**27**	**28**	**29**	**30**	**31**
Pin #	**28**	**27**	**25**	**24**	**23**	**22**	**21**	**20**	**19**	**18**	**17**	**16**	**11**	**10**	**9**	**8**
Configuration: 0 = DIO, 1 = LCD	0	1	2	3	4	5	6	7	0	1	2	3	4	5	6	7
	LCD_MAP[23:16] *(I/O RAM 0x2409)*								***LCD_MAP[31:24]*** *(I/O RAM 0x2408)*							
SEG Data Register	16	17	18	19	20	21	22	23	24	25	26	27	28	29	30	31
	LCD_SEGDIO16[5:0] to ***LCD_SEGDIO31[5:0]*** *(I/O RAM 0x2420[5:0]* to *0x242F[5:0])*															
DIO Data Register	16	17	18	19	20	21	22	23	24	25	26	27	28	29	30	31
	LCD_SEGDIO16[0] to ***LCD_SEGDIO31[0]*** *(I/O RAM 0x2420[0]* to *0x242F[0])*															
Direction Register: 0 = input, 1 = output	16	17	18	19	20	21	22	23	24	25	26	27	28	29	30	31
	LCD_SEGDIO16[1] to ***LCD_SEGDIO31[1]*** *(I/O RAM 0x2420[1]* to *0x242F[1])*															

Table 54: Data/Direction Registers for SEGDIO32 to SEGDIO45 (71M6542F/G)

SEGDIO	**32**	**33**	**34**	**35**	**36**	**37**	**38**	**39**	**40**	**41**	**42**	**43**	**44**	**45**
Pin #	**7**	**6**	**5**	**4**	**3**	**2**	**1**	**100**	**99**	**98**	**97**	**96**	**95**	**94**
Configuration: 0 = DIO, 1 = LCD	0	1	2	3	4	5	6	7	0	1	2	3	4	5
	LCD_MAP[39:32] *(I/O RAM 0x2407)*								***LCD_MAP[45:40]*** *(I/O RAM 0x2406[5:0])*					
SEG Data Register	32	33	34	35	36	37	38	39	40	41	42	43	44	45
	LCD_SEGDIO32[5:0] to ***LCD_SEGDIO45[5:0]*** *(I/O RAM 0x2430[5:0] to 0x243D[5:0])*													
DIO Data Register	32	33	34	35	36	37	38	39	40	41	42	43	44	45
	LCD_SEGDIO32[0] to ***LCD_SEGDIO45[0]*** *(I/O RAM 0x2430[0] to 0x243D[0])*													
Direction Register: 0 = input, 1 = output	32	33	34	35	36	37	38	39	40	41	42	43	44	45
	LCD_SEGDIO32[1] to ***LCD_SEGDIO45[1]*** *(I/O RAM 0x2430[1] to 0x243D[1])*													

Table 55: Data/Direction Registers for SEGDIO51 to SEGDIO55 (71M6542F/G)

SEGDIO	**51**	**52**	**53**	**54**	**55**	**–**	**–**	**–**
Pin #	**53**	**52**	**51**	**47**	**46**	**–**	**–**	**–**
Configuration: 0 = DIO, 1 = LCD	0	1	2	3	4	**–**	**–**	**–**
	LCD_MAP[55:51] *(I/O RAM 0x2405[7:3])*							
SEG Data Register	51	52	53	54	55	**–**	**–**	**–**
	LCD_SEGDIO51[5:0] to ***LCD_SEGDIO55[5:0]*** *(I/O RAM 0x2443[5:0] to 0x2447[5:0])*							
DIO Data Register	51	52	53	54	55	**–**	**–**	**–**
	LCD_SEGDIO51[0] to ***LCD_SEGDIO55[0]*** *(I/O RAM 0x2443[0] to 0x2447[0])*							
Direction Register: 0 = input, 1 = output	51	52	53	54	55	**–**	**–**	**–**
	LCD_SEGDIO51[1] to ***LCD_SEGDIO55[1]*** *(I/O RAM 0x2443[1] to 0x2447[1])*							

2.5.8.4 LCD Drivers

The LCD drivers are grouped into up to six commons (COM0 – COM5) and up to 56 segment drivers. The LCD interface is flexible and can drive 7-segment digits, 14-segments digits or enunciator symbols.

A voltage doubler and a contrast DAC generate VLCD from either VBAT or V3P3SYS, depending on the V3P3SYS voltage. The voltage doubler, while capable of driving into a 500 kΩ load, is able to generate a maximum LCD voltage that is within 1 V of twice the supply voltage. The doubler and DAC operate from a trimmed low-power reference.

The configuration of the VLCD generation is controlled by the I/O RAM field *LCD_VMODE[1:0] (I/O RAM 0x2401[7:6])*. It is decoded into the *LCD_EXT*, *LDAC_E*, and *LCD_BSTE* internal signals. Table 56 details the *LCD_VMODE[1:0]* configurations.

Table 56: *LCD_VMODE[1:0]* Configurations

LCD_VMODE [1:0]	*LCD_EXT*	*LDAC_E*	*LCD_BSTE*	**Description**
11	1	0	0	External VLCD connected to the VLCD pin.
10	0	1	1	See note 2 below for the definition of V3P3L. LCD boost is enabled. The maximum VLCD pin voltage is 2*V3P3L-1. In general, the VLCD pin voltage is as follows: VLCD = max(2*V3P3L-1, 2.5(1+*LCD_DAC[4:0]*/31)
01	0	1	0	LCD boost is disabled. The maximum VLCD voltage is V3P3L. VLCD = max(V3P3L, 2.5V+2.5**LCD_DAC[4:0]*/31)
00	0	0	0	VLCD=V3P3L, LCD DAC and LCD boost are disabled. In LCD mode, this setting causes the lowest battery current.

Notes:

1. LCD_EXT, LDAC_E and LCD_BSTE are 71M654x internal signals which are decoded from the *LCD_VMODE[1:0]* control field setting (*I/O RAM 0x2401[7:6]*). Each of these decoded signals, when asserted, has the effect indicated in the description column above, and as summarized below.
   - LCD_EXT : When set, the VLCD pin expects an external supply voltage
   - LDAC_E : When set, LCD DAC is enabled
   - LCD_BSTE : When set, the LCD boost circuit is enabled
2. V3P3L is an internal supply rail that is supplied from either the VBAT pin or the V3P3SYS pin, depending on the V3P3SYS pin voltage. When the V3P3SYS pin drops below 3.0 VDC, the 71M654x switches to BRN mode and V3P3L is sourced from the VBAT pin, otherwise V3P3L is sourced from the V3P3SYS pin while in MSN mode.

CAUTION

When using the VLCD boost circuit, use care when setting the *LCD_DAC[4:0]* (*I/O RAM 0x240D[4:0]*) value to ensure that the LCD manufacturer's recommended operating voltage specification is not exceeded.

The voltage doubler is active in all LCD modes including the LCD mode when *LCD_BSTE* = 1. Current dissipation in LCD mode can be reduced if the boost circuit is disabled and the LCD system is operated directly from VBAT.

The LCD DAC uses a low-power reference and, within the constraints of VBAT and the voltage doubler, generates a VLCD voltage of 2.5 VDC + 2.5 * *LCD_DAC[4:0]*/31.

The *LCD_BAT* bit (*I/O RAM 0x2402[7]*) causes the LCD system to use the battery voltage in all power modes. This may be useful when an external supply is available for the LCD system. The advantage of connecting the external supply to VBAT, rather than VLCD is that the LCD DAC is still active.

If *LCD_EXT* = 1, the VLCD pin must be driven from an external source. In this case, the LCD DAC has no effect.

The LCD system has the ability to drive up to six segments per SEG driver. If the display is configured with six back planes, the 6-way multiplexing compresses the number of SEG pins required to drive a display and therefore enhance the number of DIO pins available to the application. Refer to the *LCD_MODE[2:0]* field *(I/O RAM 0x2400[6:4])* settings (Table 57) for the different LCD multiplexing choices. If 5-state multiplexing is selected, SEGDIO27 is converted to COM4. If 6-state multiplexing is selected, SEGDIO26 is converted to COM5. These conversions override the SEG/DIO mapping of SEGDIO26 and SEGDIO27. Additionally, independent of *LCD_MODE[2:0]*, if *LCD_ALLCOM* = 1, then SEGDIO26 and SEGDIO27 become COM4 and COM5 if their *LCD_MAP[ ]* bits are set.

The *LCD_ON* (*I/O RAM 0x240C[0*]) and *LCD_BLANK* (*I/O RAM 0x240C[1]*) bits are an easy way to either blank the LCD display or turn it fully on. Neither bit affects the contents of the LCD data stored in the *LCDSEG_DIO[ ]* registers. In comparison, *LCD_RST* (*I/O RAM 0x240C[2]*) clears all LCD data to zero. *LCD_RST* affects only pins that are configured as LCD.

A small amount of power can be saved by programming the LCD frequency to the lowest value that provides satisfactory LCD visibility over the required temperature range.

Table 57 shows all I/O RAM registers that control the operation of the LCD interface.

Table 57: LCD Configurations

Name	Location	Rst	Wk	Dir	Description
LCD_ALLCOM	2400[3]	0	–	R/W	Configures all 6 SEG/COM pins as COM. Has no effect on pins whose *LCD_MAP* bit is zero.
LCD_BAT	2402[7]	0	–	R/W	Connects the LCD power supply to VBAT in all modes.
LCD_E	2400[7]	0	–	R/W	Enables the LCD display. When disabled, VLC2, VLC1, and VLC0 are ground as are the COM and SEG outputs if their *LCD_MAP* bit is 1.
LCD_ON *LCD_BLANK*	240C[0] 240C[1]	0 0	–	R/W R/W	*LCD_ON* = 1 turns on all LCD segments without affecting the LCD data. Similarly, *LCD_BLANK* = 1 turns off all LCD segments without affecting the LCD data. If both bits are set, all LCD segments are turned on.
LCD_RST	240C[2]	0	–	R/W	Clear all bits of LCD data. These bits affect SEGDIO pins that are configured as LCD drivers.
LCD_DAC[4:0]	240D[4:0]	0	–	R/W	This register controls the LCD contrast DAC, which adjusts the VLCD voltage and has an output range of 2.5 VDC to 5 VDC. The VLCD voltage is VLCD = 2.5 + 2.5 * *LCD_DAC[4:0]*/31 Thus, the LSB of the DAC is 80.6 mV. The maximum DAC output voltage is limited by V3P3SYS, VBAT, and whether *LCD_BSTE* is set.
LCD_CLK[1:0]	2400[1:0]	0	–	R/W	Sets the LCD clock frequency (1/T). See definition of T in Figure 21. Note: fw = 32768 Hz 00-fw/2^9, 01-fw/2^8, 10-fw/2^7, 11-fw/2^6
LCD_MODE[2:0]	2400[6:4]	0	–	R/W	The LCD bias and multiplex mode. *LCD_MODE* / **Output** 000: 4 states, 1/3 bias 001: 3 states, 1/3 bias 010: 2 states, ½ bias 011: 3 states, ½ bias 100: Static display 101: 5 states, 1/3 bias 110: 6 states, 1/3 bias
LCD_VMODE[1:0]	2401[7:6]	00	00	R/W	This register specifies how VLCD is generated. *LCD_VMODE* / **Description** 11: External VLCD 10: LCD boost and LCD DAC enabled 01: LCD DAC enabled 00: No boost and no DAC. VLCD = VBAT or V3P3SYS

The LCD can be driven in static, ½ bias, and 1/3 bias modes. Figure 21 defines the COM waveforms. Note that COM pins that are not required in a specific mode maintain a 'segment off' state rather than GND, VCC, or high impedance.

The segment drivers SEGDIO22 and SEGDIO23 can be configured to blink at either 0.5 Hz or 1 Hz. The blink rate is controlled by *LCD_Y (I/O RAM 0x2400[2])*. There can be up to six pixels/segments connected to each of these driver pins. The I/O RAM fields *LCD_BLKMAP22[5:0] (I/O RAM 0x2402[5:0])* and *LCD_BLKMAP23[5:0] (I/O RAM 0x2401[5:0])* identify which pixels, if any, are to blink. *LCD_BLKMAP22[5:0] and LCD_BLKMAP23[5:0]* are non-volatile.

The LCD bias may be compensated for temperature using the *LCD_DAC[4:0]* field (*I/O RAM 0x240D[4:0]*). The bias may be adjusted from 1.4 V below the 3.3 V supply (V3P3SYS in MSN mode and VBAT in BRN and LCD modes). When the *LCD_DAC[4:0]* field is set to 000, the DAC is bypassed and powered down. This can be used to reduce current in LCD mode.

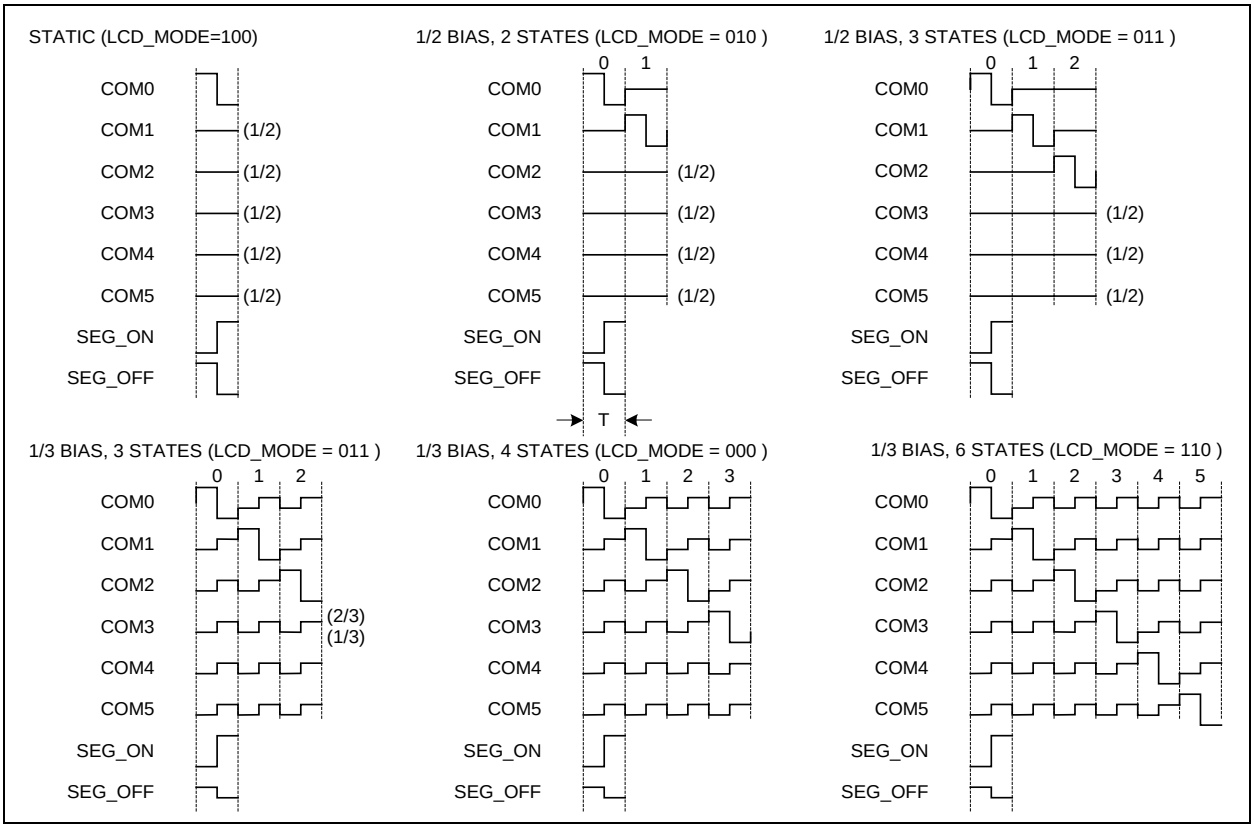

Figure 21: LCD Waveforms

LCD Drivers (71M6541D/F/G)

With a maximum of 35 LCD driver pins available, the 71M6541D/F/G is capable of driving up to 6 x 35 = 210 pixels of an LCD display when using the 6 x multiplex mode. At eight pixels per digit, this corresponds to 26 digits.

LCD segment data is written to the *LCD_SEGn[5:0]* I/O RAM registers as described in 2.5.8.2 and 2.5.8.3.

SEG46 through SEG50 cannot be configured as DIO pins. Display data for these pins are written to I/O RAM registers *LCD_SEG46[5:0]* through *LCD_SEG50[5:0]* (see Table 58). When the ICE_E pin is pulled high, it overrides the SEG functionality, and pins E_RXTX/SEG48, E_TCLK/SEG49 and E_RST/SEG50 function as ICE interface pins.

LCD_MAP[46] and *LCD_MAP[47] (I/O RAM 0x2406[6] and 0x2407[7])* must be set to 1 in order to permit TMUX2OUT/SEG46 and TMUXOUT/SEG47 to operate as SEG drivers, otherwise. If *LCD_MAP[46]* and *LCD_MAP[47]* are 0, these pins operate as TMU2XOUT and TMUXOUT (see 2.5.12 Test Ports (TMUXOUT and TMUX2OUT Pins) on page 78).

Table 58: 71M6541D/F/G LCD Data Registers for SEG46 to SEG50

SEG	**46**	**47**	**48**	**49**	**50**
Pin #	**61**	**60**	**38**	**37**	**36**
Configuration	Always LCD pins, except when used for ICE interface or TMUXOUT/TMUX2OUT.				
SEG Data Register	*LCD_SEG46[5:0]*	*LCD_SEG47[5:0]*	*LCD_SEG48[5:0]*	*LCD_SEG49[5:0]*	*LCD_SEG50[5:0]*

LCD Drivers (71M6542F/G)

With a maximum of 56 LCD driver pins available, the 71M6542D/F is capable of driving up to 6 x 56 = 336 pixels of an LCD display when using the 6 x multiplex mode. At eight pixels per digit, this corresponds to 42 digits.

LCD segment data is written to the *LCD_SEGn[5:0]* I/O RAM registers as described in 2.5.8.3 Digital I/O for the .

SEG46 through SEG50 cannot be configured as DIO pins. Display data for these pins are written to I/O RAM fields *LCD_SEG46[5:0]* (*I/O RAM 0x243E[5:0]*) through *LCD_SEG50[5:0]* (*I/O RAM 0x2442[5:0]*); see Table 59. The associated pins function as ICE interface pins, and the ICE functionality overrides the LCD function whenever ICE_E is pulled high.

Table 59: 71M6542F/G LCD Data Registers for SEG46 to SEG50

SEG	**46**	**47**	**48**	**49**	**50**
Pin #	**93**	**92**	**58**	**57**	**56**
Configuration:	Always LCD pins, except when used for ICE interface or TMUXOUT/TMUX2OUT.				
SEG Data Register	*LCD_SEGDIO46[5:0]*	*LCD_SEGDIO47[5:0]*	*LCD_SEGDIO48[5:0]*	*LCD_SEGDIO49[5:0]*	*LCD_SEGDIO50[5:0]*

2.5.9 EEPROM Interface

The 71M6541D/F/G provides hardware support for either a two-pin or a three-wire (µ-wire) type of EEPROM interface. The interfaces use the SFR *EECTRL* (*SFR 0x9F*) and *EEDATA (SFR 0x9E)* registers for communication.

2.5.9.1 Two-Pin EEPROM Interface

The dedicated 2-pin serial interface communicates with external EEPROM devices and is intended for use with I^2C devices. The interface is multiplexed onto the SEGDIO2 (SDCK) and SEGDIO3 (SDATA) pins and is selected by setting *DIO_EEX[1:0]* = 01 (*I/O RAM 0x2456[7:6]*). The MPU communicates with the interface through the SFR registers *EEDATA* and *EECTRL*. If the MPU wishes to write a byte of data to the EEPROM, it places the data in *EEDATA* and then writes the Transmit code to *EECTRL*. This initiates the transmit operation which is finished when the *BUSY* bit falls. INT5 is also asserted when *BUSY* falls. The MPU can then check the *RX_ACK* bit to see if the EEPROM acknowledged the transmission.

A byte is read by writing the Receive command to *EECTRL* and waiting for the *BUSY* bit to fall. Upon completion, the received data is in *EEDATA*. The serial transmit and receive clock is 78 kHz during each transmission, and then holds in a high state until the next transmission. The *EECTRL* bits when the two-pin interface is selected are shown in Table 60.

Table 60: *EECTRL* Bits for 2-pin Interface

Status Bit	Name	Read/ Write	Reset State	Polarity	Description
7	*ERROR*	R	0	Positive	1 when an illegal command is received.
6	*BUSY*	R	0	Positive	1 when serial data bus is busy.
5	*RX_ACK*	R	1	Positive	1 indicates that the EEPROM sent an ACK bit.
4	*TX_ACK*	R	1	Positive	1 indicates that an ACK bit has been sent to the EEPROM.
3:0	*CMD[3:0]*	W	0000	Positive	*CMD[3:0]* — Operation 0000 — No-op command. 0010 — Receive a byte from the EEPROM and send ACK. 0011 — Transmit a byte to the EEPROM. 0101 — Issue a STOP sequence. 0110 — Receive the last byte from the EEPROM and do not send ACK. 1001 — Issue a START sequence. Others — No operation, set the *ERROR* bit.

✓ The EEPROM interface can also be operated by controlling the DIO2 and DIO3 pins directly. The direction of the DIO line can be changed from input to output and an output value can be written with a single write operation, thus avoiding collisions (see Table 15 Port Registers (SEGDIO0-15)). Therefore, no resistor is required in series SDATA to protect against collisions.

2.5.9.2 Three-Wire (µ-Wire) EEPROM Interface with Single Data Pin

A 500 kHz three-wire interface, using SDATA, SDCK, and a DIO pin for CS is available. The interface is selected by setting *DIO_EEX[1:0]* = 10. The *EECTRL* bits when the three-wire interface is selected are shown in Table 61. When *EECTRL* is written, up to 8 bits from *EEDATA* are either written to the EEPROM or read from the EEPROM, depending on the values of the *EECTRL* bits.

2.5.9.3 Three-Wire (µ-Wire/SPI) EEPROM Interface with Separate Di/DO Pins

If *DIO_EEX[1:0]*=11, the three-wire interface is the same as above, except DI and DO are separate pins. In this case, SEGDIO3 becomes DO and SEGDIO8 becomes DI. The timing diagrams are the same as for *DIO_EEX[1:0]*=10 except that all output data appears on DO and all input data is expected on DI. In this mode, DI is ignored while data is being received on DO. This mode is compatible with SPI modes 0,0 and 1,1 where data is shifted out on the falling edge of the clock and is strobed in on the rising edge of the clock.

Table 61: *EECTRL* Bits for the 3-Wire Interface

Control Bit	Name	Read/ Write	Description
7	*WFR*	W	Wait for Ready. If this bit is set, the trailing edge of BUSY is delayed until a rising edge is seen on the data line. This bit can be used during the last byte of a Write command to cause the INT5 interrupt to occur when the EEPROM has finished its internal write sequence. This bit is ignored if Hi-Z=0.
6	*BUSY*	R	Asserted while the serial data bus is busy. When the BUSY bit falls, an INT5 interrupt occurs.
5	*HiZ*	W	Indicates that the SD signal is to be floated to high impedance immediately after the last SDCK rising edge.

Control Bit	Name	Read/ Write	Description
4	*RD*	W	Indicates that *EEDATA* (*SFR 0x9E*) is to be filled with data from EEPROM.
3:0	*CNT[3:0]*	W	Specifies the number of clocks to be issued. Allowed values are 0 through 8. If RD=1, CNT bits of data are read MSB first, and right justified into the low order bits of *EEDATA*. If RD=0, CNT bits are sent MSB first to the EEPROM, shifted out of the MSB of *EEDATA*. If *CNT[3:0]* is zero, SDATA simply obeys the *HiZ* bit.

The timing diagrams in Figure 22 through Figure 26 describe the 3-wire EEPROM interface behavior. All commands begin when the *EECTRL* (*SFR 0x9F*) register is written. Transactions start by first raising the DIO pin that is connected to CS. Multiple 8-bit or less commands such as those shown in Figure 22 through Figure 26 are then sent via *EECTRL* and *EEDATA*.

When the transaction is finished, CS must be lowered. At the end of a Read transaction, the EEPROM is driving SDATA, but transitions to Hi-Z (high impedance) when CS falls. The firmware should then immediately issue a write command with CNT=0 and HiZ=0 to take control of SDATA and force it to a low-Z state.

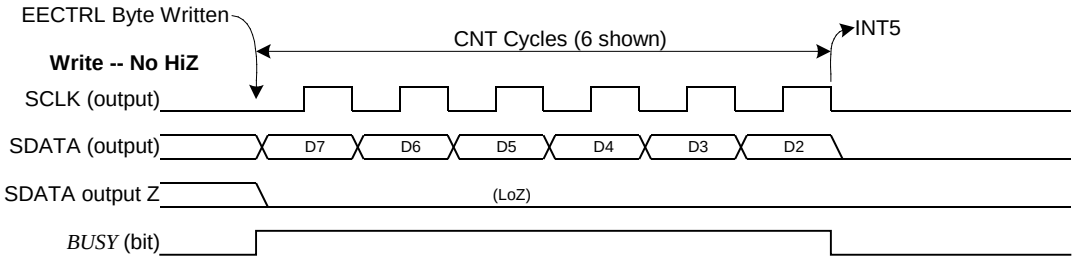

Figure 22: 3-Wire Interface. Write Command, HiZ=0.

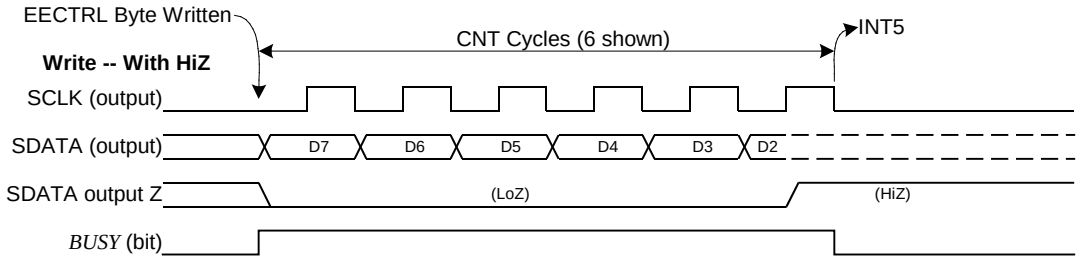

Figure 23: 3-Wire Interface. Write Command, HiZ=1

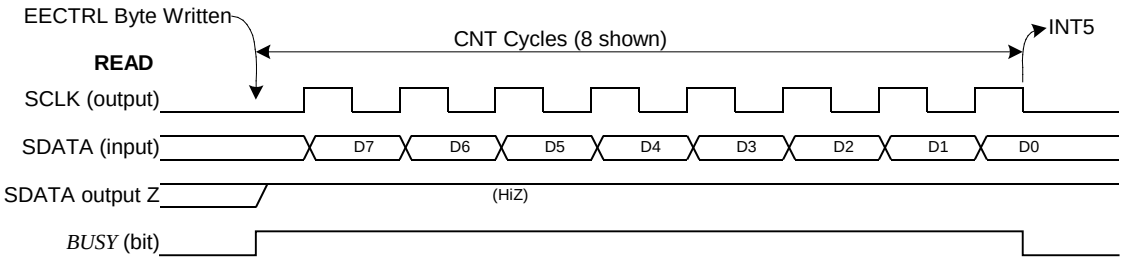

Figure 24: 3-Wire Interface. Read Command.

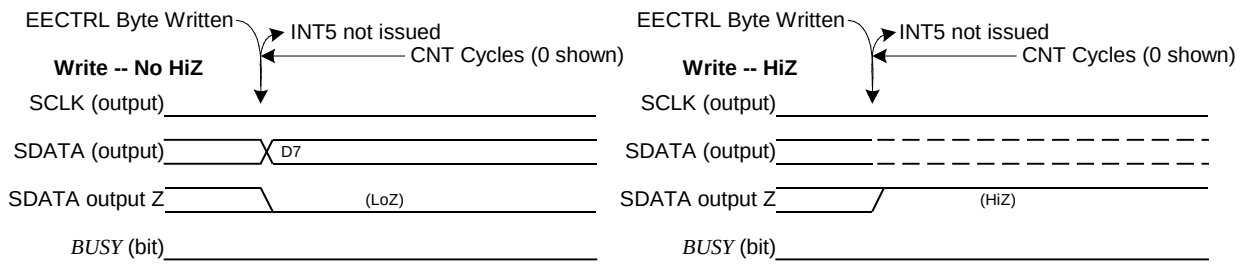

Figure 25: 3-Wire Interface. Write Command when CNT=0

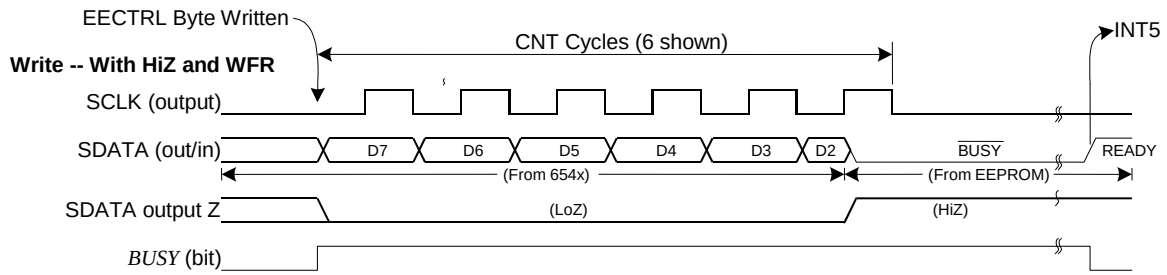

Figure 26: 3-Wire Interface. Write Command when HiZ=1 and WFR=1.

2.5.10 SPI Slave Port

The slave SPI port communicates directly with the MPU data bus and is able to read and write Data RAM and I/O RAM locations. It is also able to send commands to the MPU. The interface to the slave port consists of the SPI_CSZ, SPI_CKI, SPI_DI and SPI_DO pins. These pins are multiplexed with the combined DIO/LCD segment driver pins SEGDIO36 to SEGDIO39.

Additionally, the SPI interface allows flash memory to be read and to be programmed. To facilitate flash programming, cycling power or asserting RESET causes the SPI port pins to default to SPI mode. The SPI port is disabled by clearing the *SPI_E* bit (*I/O RAM 0x270C[4]*).

Possible applications for the SPI interface are:

1) An external host reads data from CE locations to obtain metering information. This can be used in applications where the 71M654x function as a smart front-end with preprocessing capability. Since the addresses are in 16-bit format, any type of XRAM data can be accessed: CE, MPU, I/O RAM, but not SFRs or the 80515-internal register bank.
2) A communication link can be established via the SPI interface: By writing into MPU memory locations, the external host can initiate and control processes in the 71M654x MPU. Writing to a CE or MPU location normally generates an interrupt, a function that can be used to signal to the MPU that the byte that had just been written by the external host must be read and processed. Data can also be inserted by the external host without generating an interrupt.
3) An external DSP can access front-end data generated by the ADC. This mode of operation uses the 71M654x as an analog front-end (AFE).
4) Flash programming by the external host (SPI Flash Mode).

SPI Transactions

A typical SPI transaction is as follows. While SPI_CSZ is high, the port is held in an initialized/reset state. During this state, SPI_DO is held in Hi-Z state and all transitions on SPI_CLK and SPI_DI are ignored. When SPI_CSZ falls, the port begins the transaction on the first rising edge of SPI_CLK. As shown in Table 62, a transaction consists of an optional 16 bit address, an 8 bit command, an 8 bit status byte, followed by one or more bytes of data. The transaction ends when SPI_CSZ is raised. Some transactions may consist of a command only.

When SPI_CSZ rises, SPI command bytes that are not of the form x000 0000 update the *SPI_CMD (SFR 0xFD)* register and then cause an interrupt to be issued to the MPU. The exception is if the transaction was a single byte. In this case, the *SPI_CMD* byte is always updated and the interrupt issued. *SPI_CMD* is not cleared when SPI_CSZ is high.

The SPI port supports data transfers up to 10 Mb/s. A serial read or write operation requires at least 8 clocks per byte, guaranteeing SPI access to the RAM is no faster than 1.25 MHz, thus ensuring that SPI access to DRAM is always possible.

Table 62: SPI Transaction Fields

Field Name	Required	Size (bytes)	Description
Address	Yes, except for single-byte transaction	2	16-bit address. The address field is not required if the transaction is a simple SPI command.
Command	Yes	1	8-bit command. This byte can be used as a command to the MPU. In multi-byte transactions, the MSB is the R/W bit. Unless the transaction is multi-byte and *SPI_CMD* is exactly 0x80 or 0x00, the *SPI_CMD* register is updated and an SPI interrupt is issued. Otherwise, the *SPI_CMD* register is unchanged and the interrupt is not issued.
Status	Yes, if transaction includes DATA	1	8-bit status field, indicating the status of the previous transaction. This byte is also available in the MPU memory map as *SPI_STAT (I/O RAM 0x2708)* register. See Table 64 for the contents.
Data	Yes, if transaction includes DATA	1 or more	The read or write data. Address is auto incremented for each new byte.

The *SPI_STAT* byte is output on every SPI transaction and indicates the parity of the previous transaction and the error status of the previous transaction. Potential error sources are:

- 71M654x not ready.
- Transaction not ending on a byte boundary.

SPI Safe Mode

Sometimes it is desirable to prevent the SPI interface from writing to arbitrary RAM locations and thus disturbing MPU and CE operation. This is especially true in AFE applications. For this reason, the SPI SAFE mode was created. In SPI SAFE mode, SPI write operations are disabled except for a 16 byte transfer region at address 0x400 to 0x40F. If the SPI host needs to write to other addresses, it must use the *SPI_CMD* register to request the write operation from the MPU. SPI SAFE mode is enabled by the *SPI_SAFE* bit (*I/O RAM 0x270C[3]*).

Single-Byte Transaction

If a transaction is a single byte, the byte is interpreted as SPI_CMD. Regardless of the byte value, single-byte transactions always update the *SPI_CMD* register and cause an SPI interrupt to be generated.

Multi-Byte Transaction

As shown in Figure 27, multi-byte operations consist of a 16 bit address field, an 8 bit CMD, a status byte, and a sequence of data bytes. A multi byte transaction is three or more bytes.

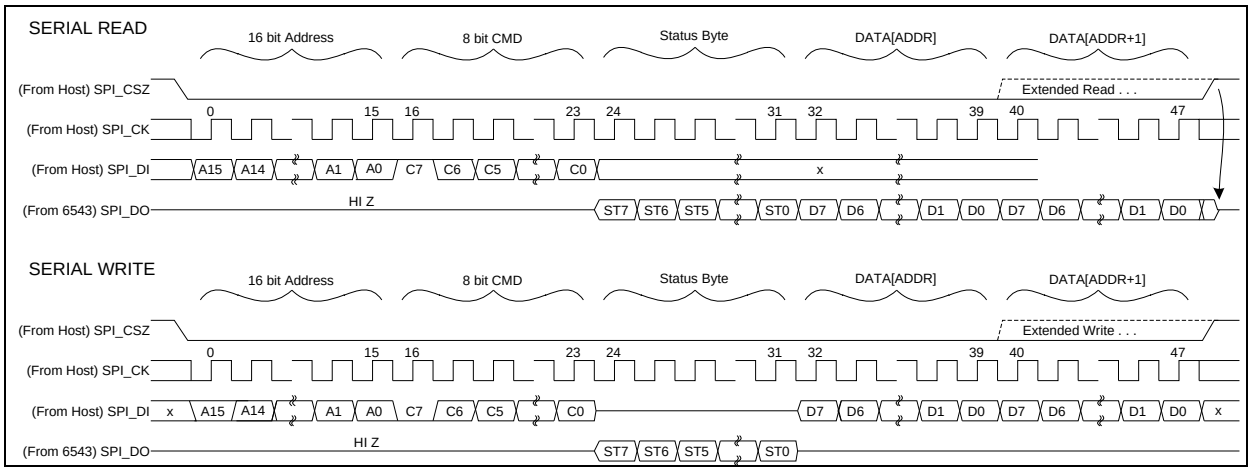

Figure 27: SPI Slave Port - Typical Multi-Byte Read and Write Operations

Table 63: SPI Command Sequences

Command Sequence	Description
ADDR 1xxx xxxx STATUS Byte0 ... ByteN	Read data starting at ADDR. ADDR auto-increments until SPI_CSZ is raised. Upon completion, *SPI_CMD (SFR 0xFD)* is updated to 1xxx xxxx and an SPI interrupt is generated. The exception is if the command byte is 1000 0000. In this case, no MPU interrupt is generated and *SPI_CMD* is not updated.
ADDR 0xxx xxxx STATUS Byte0 ... ByteN	Write data starting at ADDR. ADDR auto-increments until SPI_CSZ is raised. Upon completion, *SPI_CMD* is updated to 0xxx xxxx and an SPI interrupt is generated. The exception is if the command byte is 0000 0000. In this case, no MPU interrupt is generated and *SPI_CMD* is not updated.

Table 64: SPI Registers

Name	Location	Rst	Wk	Dir	Description
EX_SPI	2701[7]	0	0	R/W	SPI interrupt enable bit.
SPI_CMD	*SFR FD[7:0]*	–	–	R	SPI command. The 8-bit command from the bus master.
SPI_E	270C[4]	1	1	R/W	SPI port enable bit. It enables the SPI interface on pins SEGDIO36 – SEGDIO39.
IE_SPI	SFR F8[7]	0	0	R/W	SPI interrupt flag. Set by hardware, cleared by writing a 0.
SPI_SAFE	270C[3]	0	0	R/W	Limits SPI writes to *SPI_CMD* and a 16 byte region in DRAM when set. No other write operations are permitted.
SPI_STAT	2708[7:0]	0	0	R	*SPI_STAT* contains the status results from the previous SPI transaction. Bit 7: Ready error: The 71M654x was not ready to read or write as directed by the previous command. Bit 6: Read data parity: This bit is the parity of all bytes read from the 71M654x in the previous command. Does not include the *SPI_STAT* byte. Bit 5: Write data parity: This bit is the overall parity of the bytes written to the 71M654x in the previous command. It includes CMD and ADDR bytes. Bit 4-2: Bottom 3 bits of the byte count. Does not include ADDR and CMD bytes. One, two, and three byte instructions return 111. Bit 1: SPI FLASH mode: This bit is zero when the TEST pin is zero. Bit 0: SPI FLASH mode ready: Used in SPI FLASH mode. Indicates that the flash is ready to receive another write instruction.

SPI Flash Mode (SFM)

In normal operation, the SPI slave interface cannot read or write the flash memory. However, the 71M6541D/F/G and 71M6542F/G support an SPI Flash Mode (SFM) which facilitates initial programming of the flash memory. When in SFM mode, the SPI can erase, read, and write the flash memory. Other memory elements such as XRAM and I/O RAM are not accessible in this mode. In order to protect the flash contents, several operations are required before the SFM mode is successfully invoked.

In SFM mode, n byte reads and dual-byte writes to flash memory are supported. See the SPI Transactions description on Page 73 for the format of read and write commands. Since the flash write operation is always based on a two-byte word, the initial address must always be even. Data is written to the 16-bit flash memory bus after the odd word is written.

In SFM mode, the MPU is completely halted. For this reason, the interrupt feature described in the SPI Transaction section above is not available in SFM mode. The 71M6541D/F/G and 71M6542F/G must be reset by the WD timer or by the RESET pin in order to exit SFM mode.

Invoking SFM

The following conditions must be met prior to invoking SFM:

- Pin ICE_E = 1. This disables the watchdog and adds another layer of protection against inadvertent Flash corruption.
- The external power source (V3P3SYS, V3P3A) is at the proper level (> 3.0 VDC).
- *PREBOOT* = 0 (*SFR 0xB2[7]*). This validates the state of the *SECURE* bit (*SFR 0xB2[6]*).
- *SECURE* = 0. This I/O RAM register indicates that SPI secure mode is not enabled. Operations are limited to SFM Mass Erase mode if the *SECURE* bit = 1 (Flash read back is not allowed in Secure mode).
- *FLSH_UNLOCK[3:0]* (*I/O RAM 0x2702[7:4]*) = 0010.

The I/O RAM registers *SFMM* (*I/O RAM 0x2080*) and *SFMS (I/O RAM 0x2081)* are used to invoke SFM. Only the SPI interface has access to these two registers. This eliminates an indirect path from the MPU for disabling the watchdog. *SFMM* and *SFMS* need to be written to in sequence in order to invoke SFM. This sequential write process prevents inadvertent entering of SFM.

The sequence for invoking SFM is:

- First, write to the *SFMM* (*I/O RAM 0x2080*) register. The value written to this register defines the SFM mode.
    - 0xD1: Mass Erase mode. A Flash Mass erase cycle is invoked upon entering SFM.
    - 0x2E: Flash Read back mode. SFM is entered for Flash read back purposes. Flash writes are not be blocked and it is up to the user to guarantee that only previously unwritten locations are written. This mode is not accessible when SPI secure mode is set.
    - SFM is not invoked if any other pattern is written to the *SFMM* register.
- Next, write 0x96 to the *SFMS* (*I/O RAM 0x2081*) register. This action invokes SFM provided that the previous write operation to *SFMM* met the requirements. Writing any other pattern to this register does not invoke SFM. Additionally, any write operations to this register automatically reset the previously written *SFMM* register values to zero.

SFM Details

The following occurs upon entering SFM.

- The CE is disabled.
- The MPU is halted. Once the MPU is halted it can only be restarted with a reset. This reset can be accomplished with the RESET pin, a watchdog reset, or by cycling power (without battery at the VBAT pin).
- The Flash control logic is reset in case the MPU was in the middle of a Flash write operation or Erase cycle.
- Mass erase is invoked if specified in the *SFMM* register, *I/O RAM 0x2080* (see Invoking SFM, above). The *SECURE* bit (*SFR 0xB2[6]*) is cleared at the end of this and all Mass Erase cycles.
- All SPI read and write operations now refer to Flash instead of XRAM space.

The SPI host can access the current state of the pending multi-cycle Flash access by performing a 4-byte SPI write of any address and checking the status field.

All SPI write operations in SFM mode must be 6-byte write transaction that writes two bytes to an even address. The write transactions must contain a command byte of the form 0xxx xxxx. Auto incrementing is disabled for write operations.

SPI read transactions can make use of auto increment and may access single bytes. The command byte must always be of the form 1xxx xxxx in SFM read transactions.

SPI commands in SFM

Interrupts are not generated in SFM since the MPU is halted. The format of the commands is described in the SPI Transactions description on Page 73.

2.5.11 Hardware Watchdog Timer

An independent, robust, fixed-duration, watchdog timer (WDT) is included in the 71M6541D/F/G and 71M6542F/G. It uses the RTC crystal oscillator as its time base and must be refreshed by the MPU firmware at least every 1.5 seconds. When not refreshed on time, the WDT overflows and the part is reset as if the RESET pin were pulled high, except that the I/O RAM bits are in the same state as after a wake-up from SLP or LCD modes (see the I/O RAM description in 5.2 I/O RAM Map – Alphabetical Order for a list of I/O RAM bit states after RESET and wake-up). After 4100 CK32 cycles (or 125 ms) following the WDT overflow, the MPU is launched from program address 0x0000.

The watchdog timer is also reset when the internal signal WAKE=0 (see 3.4 Wake Up Behavior).

For details, see 3.3.4 Watchdog Timer Reset.

2.5.12 Test Ports (TMUXOUT and TMUX2OUT Pins)

Two independent multiplexers allow the selection of internal analog and digital signals for the TMUXOUT and TMUX2OUT pins. These pins are multiplexed with the SEG47 and SEG46 function. In order to function as test pins, *LCD_MAP[46]* (*I/O RAM 0x2406[6]*) and *LCD_MAP[47]* (*I/O RAM 0x2406[7]*) must be 0.

One of the digital or analog signals listed in

Table 65 can be selected to be output on the TMUXOUT pin. The function of the multiplexer is controlled with the I/O RAM register *TMUX[5:0] (I/O RAM 0x2502[5:0]*, as shown in

Table 65.

One of the digital or analog signals listed in Table 66 can be selected to be output on the TMUX2OUT pin. The function of the multiplexer is controlled with the I/O RAM register *TMUX2[4:0] (I/O RAM 0x2503[4:0])*, as shown in Table 66.

✓ The *TMUX[5:0]* and *TMUX2[4:0]* I/O RAM locations are non-volatile and their contents are preserved by battery power and across resets.

The TMUXOUT and TMUX2OUT pins may be used for diagnostics purposes during the product development cycle or in the production test. The RTC 1-second output may be used to calibrate the crystal oscillator. The RTC 4-second output provides higher precision for RTC calibration. RTCLK may also be used to calibrate the RTC.

Table 65: *TMUX[5:0]* Selections

TMUX[5:0]	Signal Name	Description
1	RTCLK	32.768 kHz clock waveform
9	WD_RST	Indicates when the MPU has reset the watchdog timer. Can be monitored to determine spare time in the watchdog timer.
A	CKMPU	MPU clock – see Table 9
D	V3AOK bit	Indicates that the V3P3A pin voltage is ≥ 3.0 V. The V3P3A and V3P3SYS pins are expected to be tied together at the PCB level. The 71M654x monitors the V3P3A pin voltage only.
E	V3OK bit	Indicates that the V3P3A pin voltage is ≥ 2.8 V. The V3P3A and V3P3SYS pins are expected to be tied together at the PCB level. The 71M654x monitors the V3P3A pin voltage only.
1B	MUX_SYNC	Internal multiplexer frame SYNC signal. See Figure 6 and Figure 7.
1C	CE_BUSY interrupt	See 2.3.3 on page 25 and Figure 16 on page 47
1D	CE_XFER interrupt	
1F	RTM output from CE	See 2.3.5 on page 25
Note: All *TMUX[5:0]* values which are not shown are reserved.		

Table 66: *TMUX2[4:0]* Selections

TMUX2[4:0]	Signal Name	Description
0	WD_OVF	Indicates when the watchdog timer has expired (overflowed).
1	PULSE_1S	One second pulse with 25% Duty Cycle. This signal can be used to measure the deviation of the RTC from an ideal 1 second interval. Multiple cycles should be averaged together to filter out jitter.
2	PULSE_4S	Four second pulse with 25% Duty Cycle. This signal can be used to measure the deviation of the RTC from an ideal 4 second interval. Multiple cycles should be averaged together to filter out jitter. The 4 second pulse provides a more precise measurement than the 1 second pulse.
3	RTCLK	32.768 kHz clock waveform
8	SPARE[1] bit – *I/O RAM 0x2704[1]*	Copies the value of the bit stored in 0x2704[1]. For general purpose use.
9	SPARE[2] bit – *I/O RAM 0x2704[2]*	Copies the value of the bit stored in 0x2704[2]. For general purpose use.
A	WAKE	Indicates when a WAKE event has occurred.
B	MUX_SYNC	Internal multiplexer frame SYNC signal. See Figure 6 and Figure 7.
C	MCK	See 2.5.3 on page 50
E	GNDD	Digital GND. Use this signal to make the TMUX2OUT pin static.
12	INT0 – DIG I/O	Interrupt 0. See 2.4.8 on page 41. Also see Figure 16 on page 47.
13	INT1 – DIG I/O	
14	INT2 – CE_PULSE	
15	INT3 – CE_BUSY	
16	INT4 - VSTAT	
17	INT5 – EEPROM/SPI	
18	INT6 – XFER, RTC	
1F	RTM_CK (flash)	See 2.3.5 on page 25.
Note: All *TMUX2[4:0]* values which are not shown are reserved.		

3 Functional Description

3.1 Theory of Operation

The energy delivered by a power source into a load can be expressed as:

$$E = \int_0^t V(t)I(t)dt$$

Assuming phase angles are constant, the following formulae apply:

- P = Real Energy [Wh] = V * A * cos φ* t
- Q = Reactive Energy [VARh] = V * A * sin φ * t
- S = Apparent Energy [VAh] = $\sqrt{P^2 + Q^2}$

For a practical meter, not only voltage and current amplitudes, but also phase angles and harmonic content may change constantly. Thus, simple RMS measurements are inherently inaccurate. A modern solid-state electricity meter IC such as the 71M654x functions by emulating the integral operation above, i.e., it processes current and voltage samples through an ADC at a constant frequency. As long as the ADC resolution is high enough and the sample frequency is beyond the harmonic range of interest, the current and voltage samples, multiplied with the time period of sampling yield an accurate quantity for the momentary energy. Summing up the momentary energy quantities over time results in very accurate results for accumulated energy.

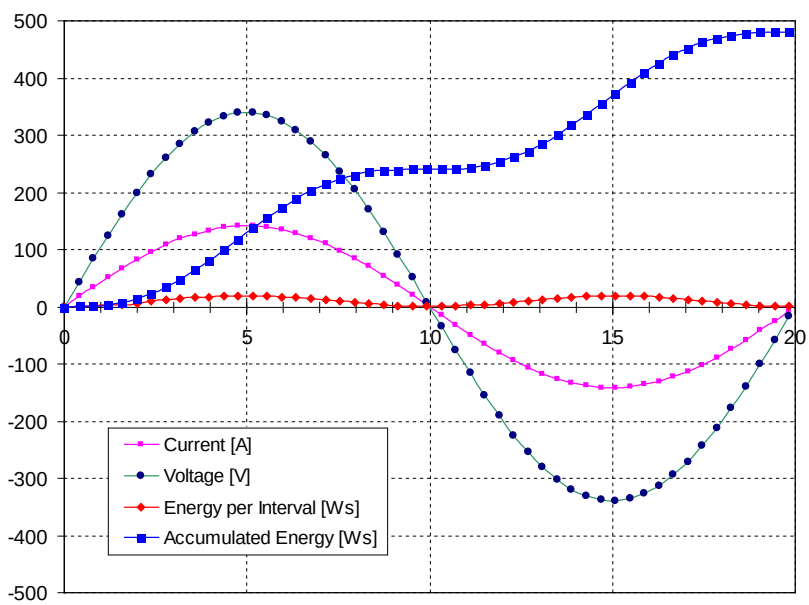

Figure 28: Voltage, Current, Momentary and Accumulated Energy

Figure 28 shows the shapes of V(t), I(t), the momentary power and the accumulated power, resulting from 50 samples of the voltage and current signals over a period of 20 ms. The application of 240 VAC and 100 A results in an accumulation of 480 Ws (= 0.133 Wh) over the 20 ms period, as indicated by the accumulated power curve. The described sampling method works reliably, even in the presence of dynamic phase shift and harmonic distortion.

3.2 Battery Modes

Shortly after system power (V3P3SYS) is applied, the part is in mission mode (MSN mode). MSN mode means that the part is operating with system power and that the internal PLL is stable. This mode is the normal operating mode where the part is capable of measuring energy.

When system power is not available, the 71M654x is in one of three battery modes:

- BRN mode (brownout mode)
- LCD mode (LCD-only mode)
- SLP mode (sleep mode).

An internal comparator monitors the voltage at the V3P3SYS pin (note that V3P3SYS and V3P3A are typically connected together at the PCB level). When the V3P3SYS dc voltage drops below 3.0 VDC, the comparator resets an internal power status bit called *V3OK* . As soon as system power is removed and *V3OK* = 0, the 71M654x switches to battery power (VBAT pin), notifies the MPU by issuing an interrupt and updates the *VSTAT[2:0]* register (*SFR 0xF9[2:0]*, see Table 68). The MPU continues to execute code when the system transitions from MSN to BRN mode. Refer to 3.2.1 BRN Mode for the settings that result in the lowest possible power during BRN mode. Depending on the MPU code, the MPU can choose to stay in BRN mode, or transition to LCD or to SLP mode (via the I/O RAM bits *LCD_ONLY*, *I/O RAM 0x28B2[6]* and *SLEEP*, *I/O RAM 0x28B2[7]*). BRN mode is similar to MSN mode except that resources powered by V3P3A power, such as the ADC are inaccurate. In BRN mode the CE continues to run and should be turned off to conserve VBAT power. Also, the PLL continues to function at the same frequency as in MSN mode and its frequency should be reduced to save power (*CKGN* = 0x24 (*I/O RAM 0x2200*).

When system power is restored, the 71M654x automatically transitions from any of the battery modes (BRN, LCD, SLP) back to MSN mode, switches back to using system power (V3P3SYS, V3P3A), issues an interrupt and updates *VSTAT[1:0]*. The MPU software should restore MSN mode operation by issuing a soft reset to restore system settings to values appropriate for MSN mode.

Figure 29 shows a state diagram of the various operating modes, with the possible transitions between modes.

When the part wakes-up under battery power, the part automatically enters BRN mode (see 3.4 Wake Up Behavior). From BRN mode, the part may enter either LCD mode or SLP mode, as controlled by the MPU.

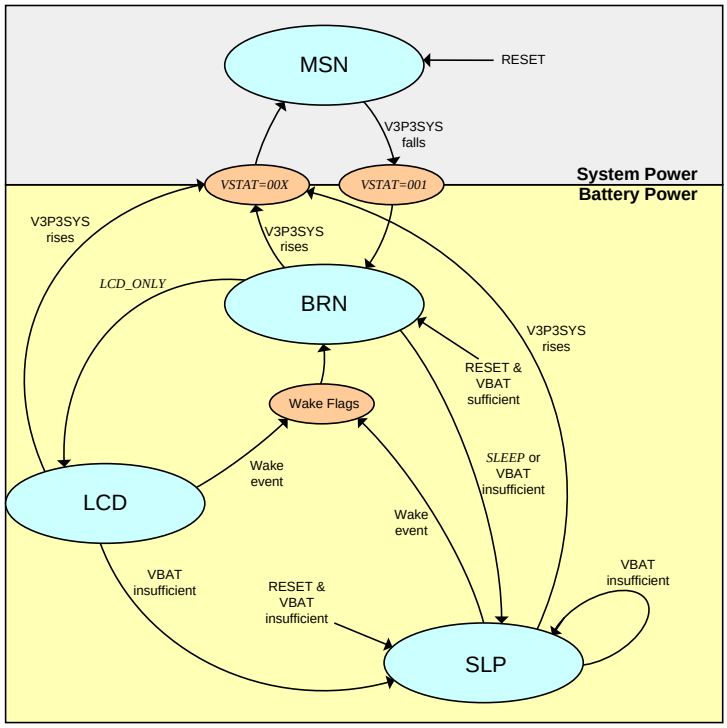

Figure 29: Operation Modes State Diagram

Transitions from both LCD and SLP mode to BRN mode can be initiated by the following events:

- Wake-up timer timeout.
- Pushbutton (PB) is activated.
- A rising edge on SEGDIO4, or a high logic level on SEGDIO52 (71M6542F/G only) or SEGDIO55.
- Activity on the RX or OPT_RX pins.

The MPU has access to a variety of registers that signal the event that caused the wake up. See 3.4 Wake Up Behavior for details.

Table 67 shows the circuit functions available in each operating mode.

Table 67: Available Circuit Functions

Circuit Function	System Power		Battery Power			
	MSN (Mission Mode)		BRN (Brownout Mode)		LCD	SLEEP
	PLL_FAST=1	PLL_FAST=0	PLL_FAST=1	PLL_FAST=0		
CE (Computation Engine)	Yes	Yes	Note 1	Note 1	--[2]	--
FIR	Yes	Yes	--	--	--	--
ADC, VREF	Yes	Yes	--	--	--	--
PLL	Yes	Yes	Yes	Yes	Boost[2]	--
Battery Measurement	Yes	Yes	Yes	Yes	--	--
Temperature sensor	Yes	Yes	Yes	Yes	Yes	Yes
Max MPU clock rate	4.92MHz (from PLL)	1.57MHz (from PLL)	4.92MHz (from PLL)	1.57MHz (from PLL)	--	--
MPU_DIV clk. divider	Yes	Yes	Yes	Yes	--	--
ICE	Yes	Yes	Yes	Yes	--	--
DIO Pins	Yes	Yes	Yes	Yes	--	--
Watchdog Timer	Yes	Yes	Yes	Yes	--	--
LCD	Yes	Yes	Yes	Yes	Yes	--
LCD Boost	Yes	Yes	Yes	Yes	Yes	
EEPROM Interface (2-wire)	Yes	Yes	Yes	Yes	--	--
EEPROM Interface (3-wire)	Yes	Yes	Yes	Yes	--	--
UART (full speed)	Yes	Yes	Yes	Yes	--	--
Optical TX modulation	38.4kHz	38.9kHz	38.4kHz	38.9kHz	--	--
Flash Read	Yes	Yes	Yes	Yes	--	--
Flash Page Erase	Yes	Yes	Yes	Yes	--	--
Flash Write	Yes	Yes	Yes	Yes	--	--
RAM Read and Write	Yes	Yes	Yes	Yes	--	--
Wakeup Timer	Yes	Yes	Yes	Yes	Yes	Yes
OSC and RTC	Yes	Yes	Yes	Yes	Yes	Yes
DRAM data preservation	Yes	Yes	Yes	Yes	--	--
NV RAM data preservation	Yes	Yes	Yes	Yes	Yes	Yes

Notes:

1. The CE is active in BRN mode, but ADC data is inaccurate. The MPU should halt the CE to conserve power (*CE_E* = 0, *I/O RAM 0x2106[0]*).
2. "--" indicates that the corresponding circuit is not active
3. "Boost" implies that the LCD boost circuit is active (i.e., *LCD_VMODE[1:0]* = 10 (*I/O RAM 0x2401[7:6]*). The LCD boost circuit requires a clock from the PLL to function. Thus, the PLL is automatically kept active if LCD boost is active while in LCD mode, otherwise the PLL is de-activated.

3.2.1 BRN Mode

In BRN mode, most non-metering digital functions are active (as shown in Table 67) including ICE, UART, EEPROM, LCD and RTC. In BRN mode, the PLL continues to function at the same frequency as MSN mode. It is up to the MPU to scale down the PLL (using *PLL_FAST, I/O RAM 0x2200[4]*) or the MPU frequency (using *MPU_DIV[2:0], I/O RAM 0x2200[2:0]*) in order to save power.

From BRN mode, the MPU can choose to enter LCD or SLP modes. When system power is restored while the 71M654x is in BRN mode, the part automatically transitions to MSN mode.

The recommended minimum power configuration for BRN mode is as follows:

- *RCE0* = 0x00 (*I/O RAM 0x2709[7:0]*) - remote sensors disabled
- *LCD_BAT* = 1 (*I/O RAM 0x2402[7]*) - LCD powered from VBAT
- *LCD_VMODE[1:0]* = 0 (*I/O RAM 0x2401[7:6]*) - 5V LCD boost disabled
- *CE6* = 0x00 (*I/O RAM 0x2106*) - CE, RTM and CHOP are disabled
- *MUX_DIV[3:0]* = 0 (*I/O RAM 0x2100[7:4])* - the ADC multiplexer is disabled
- *ADC_E* = 0 (*I/O RAM 0x2704[4]*) - ADC disabled
- *VREF_CAL* = 0 (*I/O RAM 0x2704[7]*) – Vref not driven out
- *VREF_DIS* = 1 (*I/O RAM 0x2704[6]*) - Vref disabled
- *PRE_E* = 0 (*I/O RAM 0x2704[5]* - pre-amp disabled
- *BCURR* = 0 (*I/O RAM 0x2704[3]*) - battery 100µA current load OFF
- *TMUX[5:0]* = 0x0E (*I/O RAM 0x2502[5:0]*) – TMUXOUT output set to a dc value
- *TMUX2[4:0]* = 0x0E (*I/O RAM 0x2503[4:0]*) – TMUXOUT2 output set to a dc value
- *CKGN* = 0x24 (*I/O RAM 0x2200*) - PLL set slow, *MPU_DIV[2:0]* (*I/O RAM 0x2200[2:0])* set to maximum
- *TEMP_PER[2:0]* = 6 (*I/O RAM 0x28A0[2:0]*) - temp measurement set to automatic every 512 s
- *TEMP_BSEL* = 1 (*I/O RAM 0x28A0[7]*) - temperature sensor monitors VBAT
- *PCON* = 1 (*SFR 0x87*) - at the end of the main BRN loop, halt the MPU and wait for an interrupt
- The baud rate registers are adjusted as desired
- All unused interrupts are disabled

3.2.2 LCD Mode

LCD mode may be commanded by the MPU at any time by setting the *LCD_ONLY* control bit (*I/O RAM 0x28B2[6]*). However, it is recommended that the *LCD_ONLY* control bit be set by the MPU only after the 71M654x has entered BRN mode. For example, if the 71M654x is in MSN mode when *LCD_ONLY* is set, the duration of LCD mode is very brief and the 71M654x immediately 'wakes'.

In LCD mode, V3P3D is disabled, thus removing all current leakage from the VBAT pin. Before asserting *LCD_ONLY* mode, it is recommended that the MPU minimize PLL current by reducing the output frequency of the PLL to 6.2 MHz (i.e., write *PLL_FAST* = 0, *I/O RAM 0x2200[4]*). The LCD boost system requires a clock from the PLL for its operation. Thus, if the LCD boost system is enabled (i.e., *LCD_VMODE[1:0]* = 10, *I/O RAM 0x2401[7:6]*), then the PLL is automatically kept active during LCD mode, otherwise the PLL is de-activated.

In LCD mode, the data contained in the *LCD_SEG* registers is displayed using the segment driver pins. Up to two LCD segments connected to the pins SEGDIO22 and SEGDIO23 can be made to blink without the involvement of the MPU, which is disabled in LCD mode. To minimize battery power consumption, only segments that are used should be enabled.

After the transition from LCD mode to MSN or BRN mode, the *PC* (Program Counter) is at 0x0000, the XRAM is in an undefined state, and configuration I/O RAM bits are reset (see Table 76 for I/O RAM state upon wake). The data stored in non-volatile I/O RAM locations is preserved in LCD mode (the shaded locations in Table 76 are non-volatile).

3.2.3 SLP Mode

When the V3P3SYS pin voltage drops below 2.8 VDC, the 71M654x enters BRN mode and the V3P3D pin obtains power from the VBAT pin instead of the V3P3SYS pin. Once in BRN mode, the MPU may invoke SLP mode by setting the *SLEEP* bit *(I/O RAM 0x28B2[7]*). The purpose of SLP mode is to consume the least amount power while still maintaining the RTC (Real Time Clock), temperature compensation of the RTC, and the non-volatile portions of the I/O RAM.

In SLP mode, the V3P3D pin is disconnected, removing all sources of current leakage from the VBAT pin. The non-volatile I/O RAM locations and the SLP mode functions, such as the temperature sensor, oscillator, RTC, and the RTC temperature compensation are powered by the VBAT_RTC pin. SLP mode can be exited only by a system power-up event or one of the wake methods described in 3.4 Wake Up Behavior.

If the *SLEEP* bit is asserted when V3P3SYS pin power is present (i.e., while in MSN mode), the 71M654x enters SLP mode, resetting the internal WAKE signal, at which point the 71M654x begins the standard wake from sleep procedures as described in 3.4 Wake Up Behavior.

When power is restored to the V3P3SYS pin, the 71M654x transitions from SLP mode to MSN mode and the MPU *PC* (Program Counter) is initialized to 0x0000. At this point, the XRAM is in an undefined state, but non-volatile I/O RAM locations are preserved (the shaded locations in Table 76 are non-volatile).

3.3 Fault and Reset Behavior

3.3.1 Events at Power-Down

Power fault detection is performed by internal comparators that monitor the voltage at the V3P3A pin and also monitor the internally generated VDD pin voltage (2.5 VDC). The V3P3SYS and V3P3A pins must be tied together at the PCB level, so that the comparators, which are internally connected only to the V3P3A pin, are able to simultaneously monitor the common V3P3SYS and V3P3A pin voltage. The following discussion assumes that the V3P3A and V3P3SYS pins are tied together at the PCB level.

During a power failure, as V3P3A falls, two thresholds are detected:

- The first threshold, at 3.0 VDC (*VSTAT[2:0]* = 001), warns the MPU that the analog modules are no longer accurate. Other than warning the MPU, the hardware takes no action when this threshold is crossed.
- The second threshold, at 2.8 VDC, causes the 71M654x to switch to battery power. This switching happens while the FLASH and RAM systems are still able to read and write.

The power quality is reflected by the SFR *VSTAT[2:0]* field, as shown in Table 68. The *VSTAT[2:0]* field is located at SFR address 0xF9 and occupies bits [2:0], and it is read-only.

In addition to the state of the main power, the *VSTAT[2:0]* register provides information about the internal VDD voltage under battery power. Note that if system power (V3P3A) is above 2.8 VDC, the 71M6541D/F/G and 71M6542F/G always switch from battery to system power.

Table 68: *VSTAT[2:0] (SFR 0xF9[2:0])*

VSTAT[2:0]	**Description**
000	System Power OK. V3P3A > 3.0 VDC. Analog modules are functional and accurate.
001	System Power is low. 2.8 VDC < V3P3A < 3.0 VDC. Analog modules not accurate. Switch over to battery power is imminent.
010	The IC is on battery power and VDD is OK. VDD > 2.25 VDC. The IC has full digital functionality.
011	The IC is on battery power and 2.25 VDC > VDD > 2.0 VDC. Flash write operations are inhibited.
101	The IC is on battery power and VDD < 2.0, which means that the MPU is nearly out of voltage. A reset occurs in 4 cycles of the crystal clock CK32.

The response to a system power fault is almost entirely controlled by firmware. During a power failure, system power slowly falls. This is monitored by internal comparators that cause the hardware to automatically switch over to taking power from the VBAT input. An interrupt notifies the MPU that the part is now battery powered. At this point, it is the MPU's responsibility to reduce power by slowing the clock rate, disabling the PLL, etc.

Precision analog components such as the bandgap reference, the bandgap buffer, and the ADC are powered only by the V3P3A pin and become inaccurate and ultimately unavailable as the V3P3A pin voltage continues to drop (i.e., circuits powered by the V3P3A pin are not backed by the VBAT pin). When the V3P3A pin falls below 2.8 VDC, the ADC clocks are halted and the amplifiers are unbiased. Meanwhile, control bits such as *ADC_E* bit *(I/O RAM 0x2704[4])* are not affected, since their I/O RAM storage is powered from the VDD pin (2.5 VDC). The VDD pin is supplied with power through an internal 2.5 VDC regulator that is connected to the V3P3D pin. In turn, the V3P3D pin is switched to receive power from the VBAT pin when the V3P3SYS pin drops below 3.0 VDC. Note that the V3P3SYS and V3P3A pins are typically tied together at the PCB level.

3.3.2 IC Behavior at Low Battery Voltage

When system power is not present, the 71M6541D/F/G and 71M6542F/G rely on the VBAT pin for power. If the VBAT voltage is not sufficient to maintain VDD at 2.0 VDC or greater, the MPU cannot operate reliably. Low VBAT voltage can occur while the part is operating in BRN mode, or while it is dormant in SLP or LCD mode. Two cases can be distinguished, depending on MPU code:

- Case 1: System power is not present, and the part is waking from SLP or LCD mode. In this case, the hardware checks the value of VDD to determine if processor operation is possible. If it is not possible, the part configures itself for BRN operation, and holds the processor in reset (WAKE=0). In this mode, VBAT powers the 1.0 VDC reference for the LCD system, the VDD regulator, the PLL, and the fault comparator. The part remains in this waiting mode until VDD becomes high due to system power being applied or the VBAT battery being replaced or recharged.
- Case 2: The part is operating under VBAT power and *VSTAT[2:0]* (*SFR 0xF9[2:0]*) becomes 101, indicating that VDD falls below 2.0 VDC. In this case, the firmware has two choices:
  1) One choice is to assert the *SLEEP* bit (*I/O RAM 0x28B2[7])* immediately. This assertion preserves the remaining charge in VBAT. Of course, if the battery voltage is not increased, the 71M654x enters Case 1 as soon as it tries to wake up.
  2) The alternative choice is to enter the waiting mode described in Case 1 immediately. Specifically, if the firmware does not assert the *SLEEP* bit, the hardware resets the processor four CE32 clock cycles (i.e., 122 µs) after *VSTAT[2:0]* becomes 101 and, as described in Case 1, it begins waiting for VDD to become greater than 2.0 VDC. The MPU wakes up when system power returns, or when VDD becomes greater than 2.0 VDC.

In either case, when VDD recovers, and when the MPU wakes up, the *WF_BADVDD* flag (*I/O RAM 0x28B0[2]*) can be read to determine that the processor is recovering from a bad VBAT condition. The *WF_BADVDD* flag remains set until the next time WAKE falls. This flag is independent of the other WF flags.

In all cases, low VBAT voltage does not corrupt RTC operation, the state of NV memory, or the state of non-volatile memory. These circuits depend on the VBAT_RTC pin for power.

3.3.3 Reset Sequence

When the RESET pin is pulled high, all digital activity in the chip stops, with the exception of the oscillator and RTC. Additionally, all I/O RAM bits are forced to their RST state. Reliable reset does not occur until RESET has been high at least for 2 µs. Note that TMUX and the RTC do not reset unless the TEST pin is pulled high while RESET is high.

The *RESET* control bit (*I/O RAM 0x 2200[3]*) performs an identical reset to the RESET pin except that a significantly shorter reset timer is used.

Once initiated, the reset sequence waits until the reset timer times out. The time-out occurs in 4100 CE32 cycles (125 ms), at which time the MPU begins executing its pre-boot and boot sequences from address 0x0000. See 2.5.1.1 Hardware Watchdog Timer for a detailed description of the pre-boot and boot sequences.

If system power is not present, the reset timer duration is two CE32 cycles, at which time the MPU begins executing in BRN mode, starting at address 0x0000.

A softer form of reset is initiated when the E_RST pin of the ICE interface is pulled low. This event causes the MPU and other registers in the MPU core to be reset but does not reset the remainder of the IC, for example the I/O RAM. It does not trigger the reset sequence. This type of reset is intended to reset the MPU program, but not to make other changes to the chip's state.

3.3.4 Watchdog Timer Reset

The watchdog timer (WDT) is described in 2.5.11 Hardware Watchdog Timer.

A status bit, *WF_OVF (I/O RAM 0x28B0[4])*, is set when a WDT overflow occurs. Similar to the other wake flags, this bit is powered by the non-volatile supply and can be read by the MPU to determine if the part is initializing after a WD overflow event or after a power up. The *WF_OVF* bit is cleared by the RESET pin.

There is no internal digital state that could deactivate the WDT. For debug purposes, however, the WDT can be disabled by raising the ICE_E pin to 3.3 VDC.

In normal operation, the WDT is reset by periodically writing a one to the *WD_RST* control bit (*I/O RAM 0x28B4[7]*). The watchdog timer is also reset when the 71M654x wakes from LCD or SLP mode, and when ICE_E = 1.

3.4 Wake Up Behavior

As described above, the part always wakes-up in MSN mode when system power is restored. As described in 3.2 Battery Modes, transitions from both LCD and SLP mode to BRN mode can be initiated by a wake-up timer timeout, when the pushbutton (PB) input is high, a rising edge on SEGDIO4, or a high logic level on SEGDIO52 or SEGDIO55, or by activity on the RX or OPT_RX pins.

3.4.1 Wake on Hardware Events

The following pin signal events wake the 71M654x from SLP or LCD mode: a high level on the PB pin, either edge on the RX pin, a rising edge on the SEGDIO4 pin, a high level on the SEGDIO52 pin (71M6542F/G only), or a high level on the SEGDIO55 pin or either edge on the OPT_RX pin. See Table 69 for de-bounce details on each pin and for further details on the OPT_RX/SEGDIO55 pin. The SEGDIO4, SEGDIO52 (71M6542F/G only), and SEGDIO55 pins must be configured as DIO inputs and their wake enable (*EW_x* bits) must be set. In SLP and LCD modes, the MPU is held in reset and cannot poll pins or react to interrupts. When one of the hardware wake events occurs, the internal WAKE signal rises and within three CK32 cycles the MPU begins to execute. The MPU can determine which one of the pins awakened it by checking the *WF_PB*, *WF_RX*, *WF_SEGDIO4*, *WF_DIO52* (71M6542F/G only), or *WF_DIO55* flags (see Table 69).

If the part is in SLP or LCD mode, it can be awakened by a high level on the PB pin. This pin is normally pulled to GND and can be connected externally so it may be pulled high by a push button depression.

Some pins are de-bounced to reject EMI noise. Detection hardware ignores all transitions after the initial transition. Table 69 shows which pins are equipped with de-bounce circuitry.

Pins that do not have de-bounce circuits must still be high for at least 2 µs to be recognized.

The wake enable and flag bits are also shown in Table 69. The wake flag bits are set by hardware when the MPU wakes from a wake event. Note that the PB flag is set whenever the PB is pushed, even if the part is already awake.

Table 71 lists the events that clear the WF flags.

In addition to push buttons and timers, the part can also reboot due to the RESET pin, the *RESET* bit (*I/O RAM 0x2200[3]*), the WDT, the cold start detector, and E_RST. As seen in Table 69, each of these mechanisms has a flag bit to alert the MPU to the source of the wakeup. If the wake-up is caused by return of system power, there is no active WF flag and the *VSTAT[2:0]* field (*SFR 0xF9[2:0]*) indicate that system power is stable.

Table 69: Wake Enables and Flag Bits

Wake Enable		Wake Flag		De-bounce	Description
Name	**Location**	**Name**	**Location**		
WAKE_ARM	28B2[5]	*WF_TMR*	28B1[5]	No	Wake on Timer.
EW_PB	28B3[3]	*WF_PB*	28B1[3]	Yes	Wake on PB*.
EW_RX	28B3[4]	*WF_RX*	28B1[4]	2 µs	Wake on either edge of RX.
EW_DIO4	28B3[2]	*WF_DIO4*	28B1[2]	2 µs	Wake on SEGDIO4.
EW_DIO52†	28B3[1]	*WF_DIO52*	28B1[1]	Yes	Wake on SEGDIO52*.
EW_DIO55	28B3[0]	*WF_DIO55*	28B1[0]	Yes	*OPT_RXDIS* = 1: Wake on DIO55* with 64 ms de-bounce. *OPT_RXDIS* = 0: Wake on either edge of OPT_RX with 2 µs de-bounce. *OPT_RXDIS: I/O RAM 0x2457[2]*
Always Enabled		*WF_RST*	28B0[6]	2 µs	Wake after *RESET*.
Always Enabled		*WF_RSTBIT*	28B0[5]	No	Wake after *RESET* bit.
Always Enabled		*WF_ERST*	28B0[3]	2 µs	Wake after E_RST. (ICE must be enabled)
Always Enabled		*WF_OVF*	28B0[4]	No	Wake after WD reset.
Always Enabled		*WF_CSTART*	28B0[7]	No	Wake after cold start - the first application of power.
Always Enabled		*WF_BADVDD*	28B0[2]	No	Wake after insufficient VBAT voltage.

† 71M6542F/G only.

*This pin is sampled every 2 ms and must remain high for 64 ms to be declared a valid high level. This pin is high-level sensitive.

Table 70: Wake Bits

Name	Location	RST	WK	Dir	Description
EW_DIO4	28B3[2]	0	–	R/W	Connects SEGDIO4 to the WAKE logic and permits SEGDIO4 rising to wake the part. This bit has no effect unless SEGDIO4 is configured as a digital input.
EW_DIO52	28B3[1]	0	–	R/W	Connects DIO52 to the WAKE logic and permits DIO52 high-level to wake the part (71M6542F/G only). This bit has no effect unless DIO52 is configured as a digital input.
EW_DIO55	28B3[0]	0	–	R/W	Connects DIO55 to the WAKE logic and permits DIO55 high-level to wake the part. This bit has no effect unless DIO55 is configured as a digital input.
WAKE_ARM	28B2[5]	0	–	R/W	Arms the WAKE timer and loads it with the value in the *WAKE_TMR* register (*I/O RAM 0x2880*). When SLP mode or LCD mode is asserted by the MPU, the WAKE timer becomes active.
EW_PB	28B3[3]	0	–	R/W	Connects the PB pin to the WAKE logic and permits PB high-level to wake the part. PB is always configured as an input.
EW_RX	28B3[4]	0	–	R/W	Connects the RX pin to the WAKE logic and permits RX rising to wake the part. See 3.4.1 for de-bounce issues.
WF_DIO4	28B1[2]	0	–	R	SEGDIO4 flag bit. If SEGDIO4 is configured to wake the part, this bit is set whenever SEGDIO4 rises. It is held in reset if SEGDIO4 is not configured for wakeup.
WF_DIO52	28B1[1]	0	–	R	SEGDIO52 flag bit. If SEGDIO52 is configured to wake the part, this bit is set whenever SEGDIO52 is a high level. It is held in reset if SEGDIO52 is not configured for wakeup (71M6542F/G only).
WF_DIO55	28B1[0]	0	–	R	SEGDIO55 flag bit. If SEGDIO55 is configured to wake the part, this bit is set whenever SEGDIO55 is a high level. It is held in reset if SEGDIO55 is not configured for wakeup.
WF_TMR	28B1[5]	0	–	R	Indicates that the Wake timer caused the part to wake up.
WF_PB	28B1[3]	0	–	R	Indicates that the PB pin caused the part to wake.
WF_RX	28B1[4]	0	–	R	Indicates that RX pin caused the part to wake.
WF_RST *WF_RSTBIT* *WF_ERST* *WF_CSTART* *WF_BADVDD*	28B0[6] 28B0[5] 28B0[3] 28B0[7] 28B0[2]	* * * * *	–	R	Indicates that the RST pin, E_RST pin, *RESET* bit (*I/O RAM 0x2200[3]*), the cold start detector, or low voltage on the VBAT pin caused the part to reset. *See Table 71 for details.

Table 71: Clear Events for WAKE flags

Flag	Wake on:	Clear Events
WF_TMR	Timer expiration	WAKE falls
WF_PB	PB pin high level	WAKE falls
WF_RX	Either edge RX pin	WAKE falls
WF_DIO4	SEGDIO4 rising edge	WAKE falls
WF_DIO52	SEGDIO52 high level (71M6542F/G only)	WAKE falls
WF_DIO55	If *OPT_RXDIS* = 1 (*I/O RAM 0x2457[2]*), wake on SEGDIO55 high If *OPT_RXDIS* = 0 wake on either edge of OPT_RX	WAKE falls
WF_RST	RESET pin driven high	WAKE falls, *WF_CSTART*, *WF_RSTBIT*, *WF_OVF*, *WF_BADVDD*
WF_RSTBIT	*RESET* bit is set (*I/O RAM 0x2200[3]*)	WAKE falls, *WF_CSTART*, *WF_OVF*, *WF_BADVDD*, *WF_RST*
WF_ERST	E_RST pin driven high and the ICE interface must be enabled by driving the ICE_E pin high.	WAKE falls, WF_CSTART, WF_RST, WF_OVF, WF_RSTBIT
WF_OVF	Watchdog (WD) reset	WAKE falls, *WF_CSTART*, *WF_RSTBIT*, *WF_BADVDD*, *WF_RST*
WF_CSTART	Coldstart (i.e., after the application of first power)	WAKE falls, *WF_RSTBIT*, *WF_OVF*, *WF_BADVDD*, *WF_RST*

Note:
"WAKE falls" implies that the internal WAKE signal has been reset, which happens automatically upon entry into LCD mode or SLEEP mode (i.e., when the MPU sets the LCD_ONLY bit (*I/O RAM 0x28B2[6]*) or the SLEEP (*I/O RAM 0x28B2[7]*) bit). When the internal WAKE signal resets, all wake flags are reset. Since the various wake flags are automatically reset when WAKE falls, it is not necessary for the MPU to reset these flags before entering LCD mode or SLEEP mode. Also, other wake events can cause the wake flag to reset, as indicated above (e.g., the *WF_RST* flag can also be reset by any of the following flags setting: *WF_CSTART*, *WS_RSTBIT*, *WF_OVF*, *WF_BADVDD*)

3.4.2 Wake on Timer

If the part is in SLP or LCD mode, it can be awakened by the Wake Timer. Until this timer times out, the MPU is in reset due to the internal WAKE signal being low. When the Wake Timer times out, WAKE rises and within three CK32 cycles, the MPU begins to execute. The MPU can determine that the timer woke it by checking the *WF_TMR* wake flag (*I/O RAM 0x28B1[2]*).

The Wake Timer begins timing when the part enters LCD or SLP mode. Its duration is controlled by the value in the *WAKE_TMR[7:0]* register *(I/O RAM 0x2880)*. The timer duration is *WAKE_TMR* +1 seconds.

The Wake Timer is armed by setting *WAKE_ARM* = 1 (*I/O RAM 0x28B2[5]*). It must be armed at least three RTC cycles before either SLP or LCD modes are initiated. Setting *WAKE_ARM* presets the timer with the value in *WAKE_TMR* and readies the timer to start when the MPU writes to the *SLEEP* (I*/O RAM 0x28B2[7]*) or *LCD_ONLY (I/O RAM 0x28B2[6])* bits. The timer is neither reset nor disarmed when the MPU wakes-up. Thus, once armed and set, the MPU continues to be awakened *WAKE_TMR[7:0]* seconds after it requests SLP mode or LCD mode (i.e., once written, the *WAKE_TMR[7:0]* register holds its value and does not have to be re-written each time the MPU enters SLP or LCD mode. Also, since *WAKE_TMR[7:0]* is non-volatile, it also holds its value through resets and power failures).

3.5 Data Flow and MPU/CE Communication

The data flow between the Compute Engine (CE) and the MPU is shown in Figure 30. In a typical application, the 32-bit CE sequentially processes the samples from the voltage inputs on pins IA, VA, IB, etc., performing calculations to measure active power (Wh), reactive power (VARh), A^2h, and V^2h for four-quadrant metering. These measurements are then accessed by the MPU, processed further and output using the peripheral devices available to the MPU.

Both the CE and multiplexer are controlled by the MPU via shared registers in the I/O RAM and in RAM.

The CE outputs a total of six discrete signals to the MPU. These consist of four pulses and two interrupts:

- CE_BUSY
- XFER_BUSY
- WPULSE, VPULSE (pulses for active and reactive energy)
- XPULSE, YPULSE (auxiliary pulses)

These interrupts are connected to the MPU interrupt service inputs as external interrupts. CE_BUSY indicates that the CE is actively processing data. This signal occurs once every multiplexer cycle (typically 396 µs), and indicates that the CE has updated status information in its *CESTATUS* register (*CE RAM 0x80*).

XFER_BUSY indicates that the CE is updating data to the output region of the RAM. This indication occurs whenever the CE has finished generating a sum by completing an accumulation interval determined by *SUM_SAMPS[12:0], I/O RAM 0x2107[4:0], 2108[7:0]*, (typically every 1000 ms). Interrupts to the MPU occur on the falling edges of the XFER_BUSY and CE_BUSY signals.

WPULSE and VPULSE are typically used to signal energy accumulation of real (Wh) and reactive (VARh) energy. Tying WPULSE and VPULSE into the MPU interrupt system can support pulse counting.

XPULSE and YPULSE can be used to signal events such as sags and zero crossings of the mains voltage to the MPU. Tying these outputs into the MPU interrupt system relieves the MPU from having to read the *CESTATUS* register at every occurrence of the CE_BUSY interrupt in order to detect sag or zero crossing events.

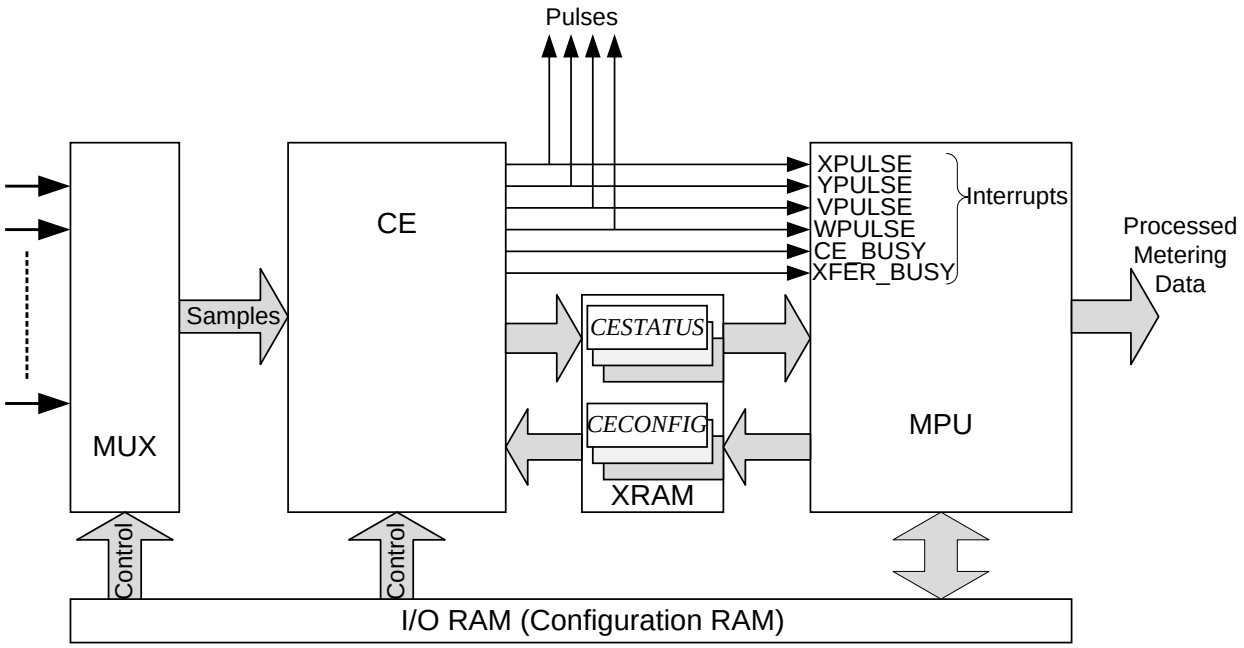

Figure 30: MPU/CE Data Flow

Refer to 5.3 CE Interface Description for additional information on setting up the device using the MPU firmware.

4 Application Information

4.1 Connecting 5 V Devices

All digital input pins of the 71M654x are compatible with external 5 V devices. I/O pins configured as inputs do not require current-limiting resistors when they are connected to external 5 V devices.

4.2 Direct Connection of Sensors

Figure 31 through Figure 34 show voltage-sensing resistive dividers, current-sensing current transformers (CTs) and current-sensing resistive shunts and how they are connected to the voltage and current inputs of the 71M654x. All input signals to the 71M654x sensor inputs are voltage signals providing a scaled representation of either a sensed voltage or current.

CAUTION

The analog input pins of the 71M654x are designed for sensors with low source impedance. RC filters with resistance values higher than those implemented in the Demo Boards must not be used. Refer to the Demo Board schematics for complete sensor input circuits and corresponding component values.

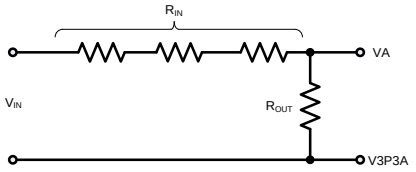

Figure 31: Resistive Voltage Divider (Voltage Sensing)

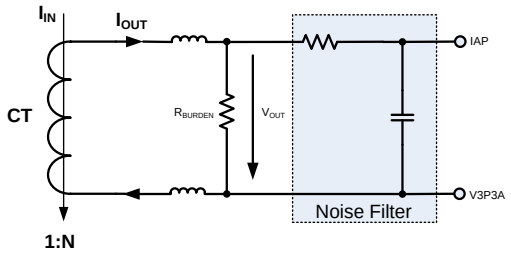

Figure 32. CT with Single-Ended Input Connection (Current Sensing)

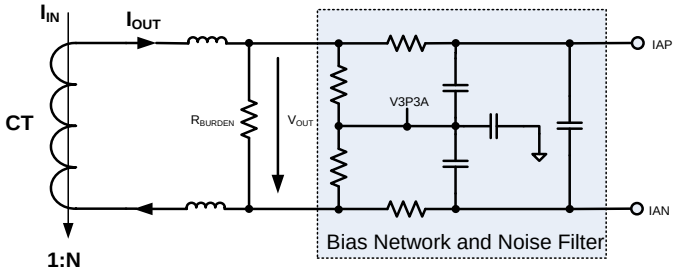

Figure 33: CT with Differential Input Connection (Current Sensing)

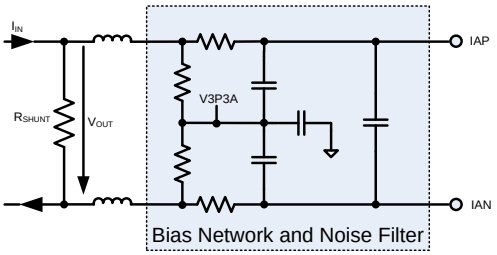

Figure 34: Differential Resistive Shunt Connections (Current Sensing)

4.3 71M6541D/F/G Using Local Sensors

Figure 35 shows a 71M6541D/F/G configuration using locally connected current sensors. The IAP-IAN current channel may be directly connected to either a shunt resistor or a CT, while the IBP-IBN channel is connected to a CT and is therefore isolated. This configuration implements a single-phase measurement with tamper-detection using one current sensor to measure the neutral current. This configuration can also be used to create a split phase meter (e.g., ANSI Form 2S). For best performance, both the IAP-IAN and IBP-IBN current sensor inputs are configured for differential mode (i.e., *DIFFA_E* = 1 and *DIFFB_E* = 1, *I/O RAM 0x210C[4]* and *0x210C[5]*). The IBP-IBN input must be configured as an analog differential input disabling the remote sensor interface (i.e., *RMT_E* = 0, *I/O RAM 0x2709[3]*). See Figure 2 for the AFE configuration corresponding to Figure 35.

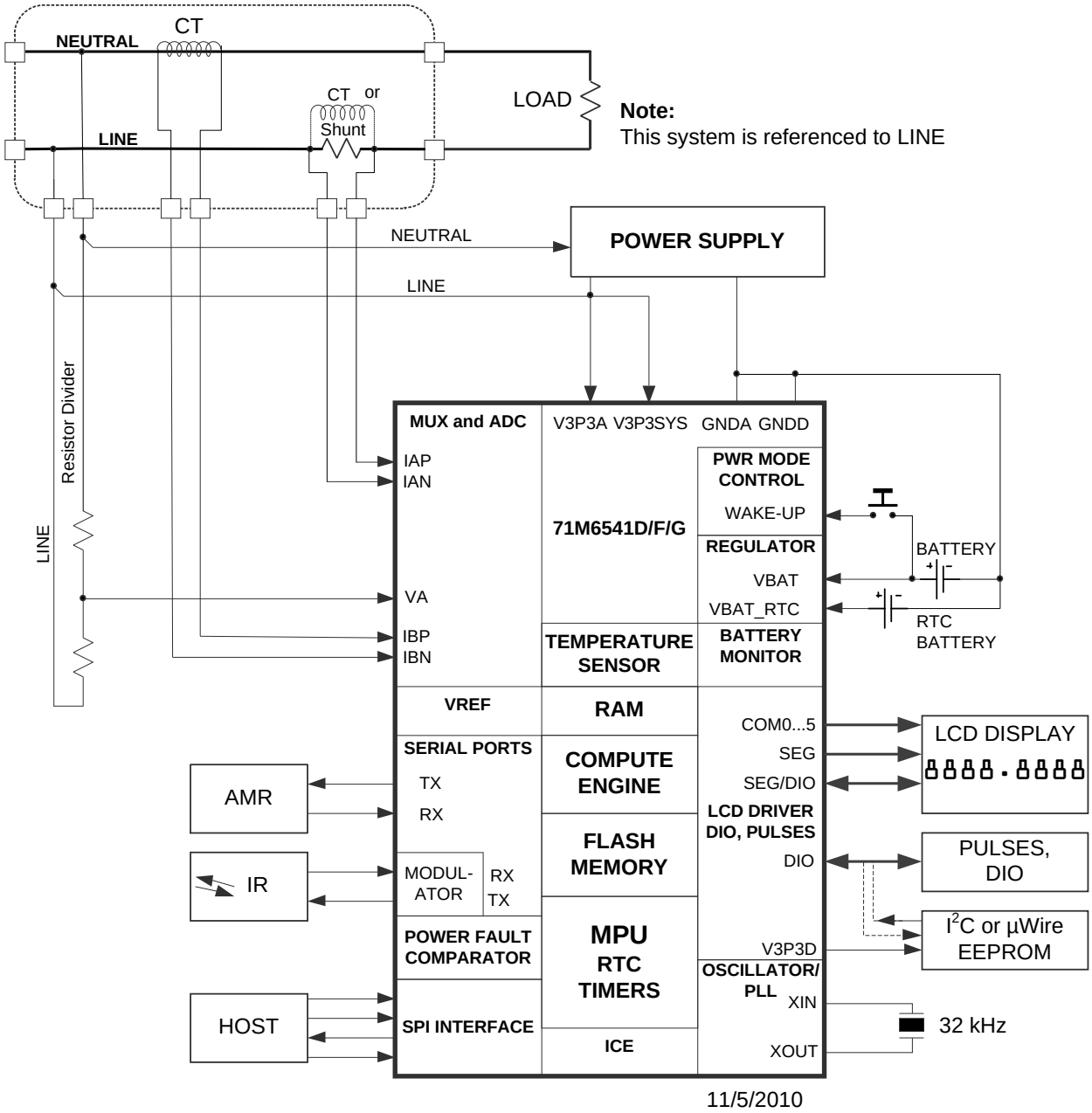

Figure 35. 71M6541D/F/G with Local Sensors

4.4 71M6541D/F/G Using 71M6x01and Current Shunts

Figure 36 shows a typical connection for one isolated and one non-isolated shunt sensor, using the 71M6x01 Isolated Sensor Interface. This configuration implements a single-phase measurement with tamper-detection using the second current sensor. This configuration can also be used to create a split phase meter (e.g., ANSI Form 2S). For best performance, the IAP-IAN current sensor input is configured for differential mode (i.e., *DIFFA_E* = 1, *I/O RAM 0x210C[4]*). The outputs of the 71M6x01 Isolated Sensor Interface are routed through a pulse transformer, which is connected to the pins IBP-IBN. The IBP-IBN pins must be configured for remote sensor communication (i.e., *RMT_E* =1, *I/O RAM 0x2709[3]*). See Figure 3 for the AFE configuration corresponding to Figure 36.

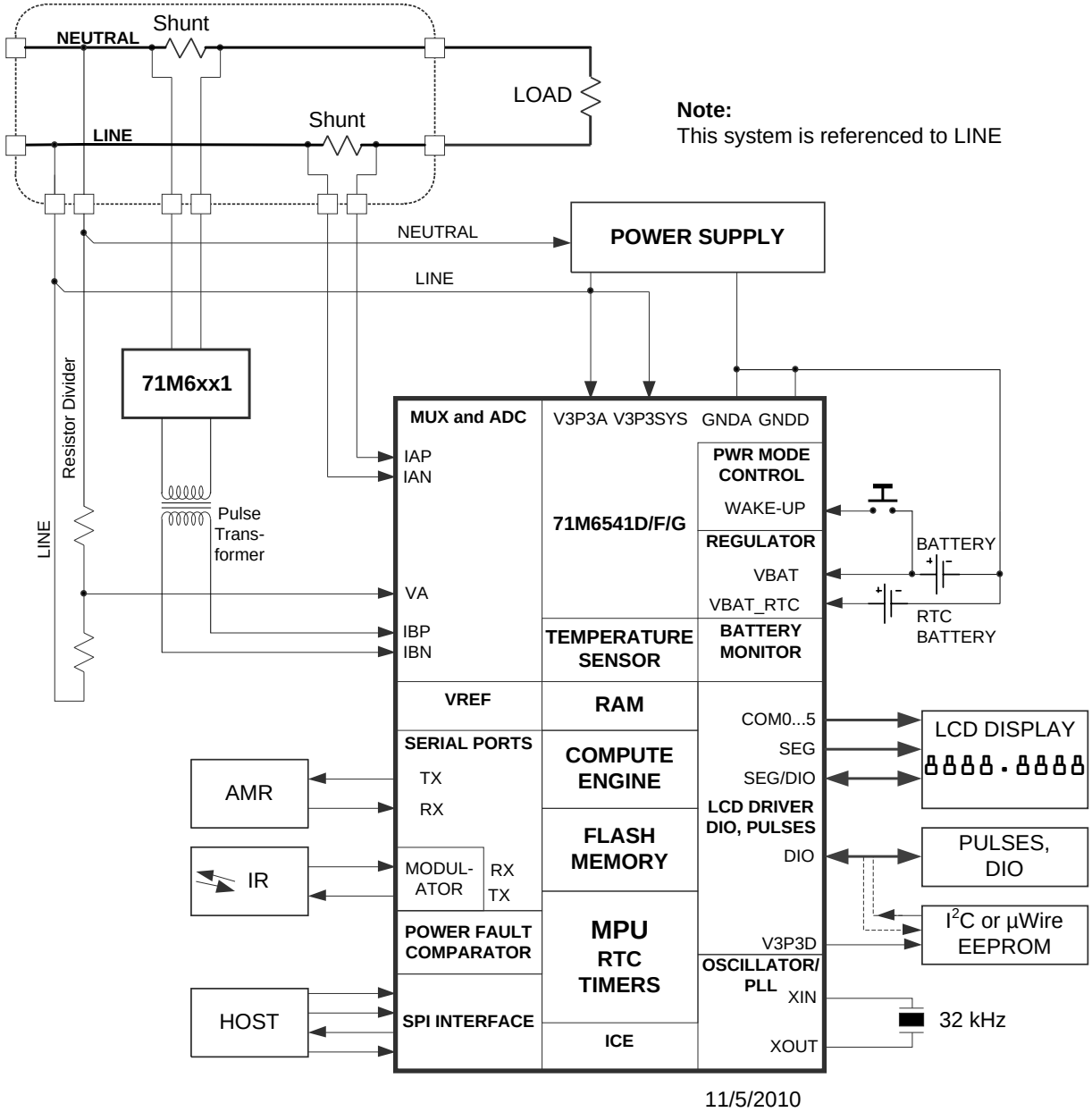

Figure 36: 71M6541D/F/G with 71M6x01 isolated Sensor

4.5 71M6542F/G Using Local Sensors

Figure 38 shows a 71M6542F/G configuration using locally connected current sensors. The IAP-IAN current channel may be directly connected to either a shunt resistor or a CT, while the IBP-IBN channel is connected to a CT and is therefore isolated. This configuration implements a dual-phase measurement utilizing Equation 2. For best performance, both the IAP-IAN and IBP-IBN current sensor inputs are configured for differential mode (i.e., *DIFFA_E* = 1 and *DIFFB_E* = 1, *I/O RAM 0x210C[4]* and *0x210C[5]*). The IBP-IBN input must be configured as an analog differential input disabling the remote sensor interface (i.e., *RMT_E* = 0, *I/O RAM 0x2709[3]*). See Figure 4 for the AFE configuration corresponding to Figure 38.

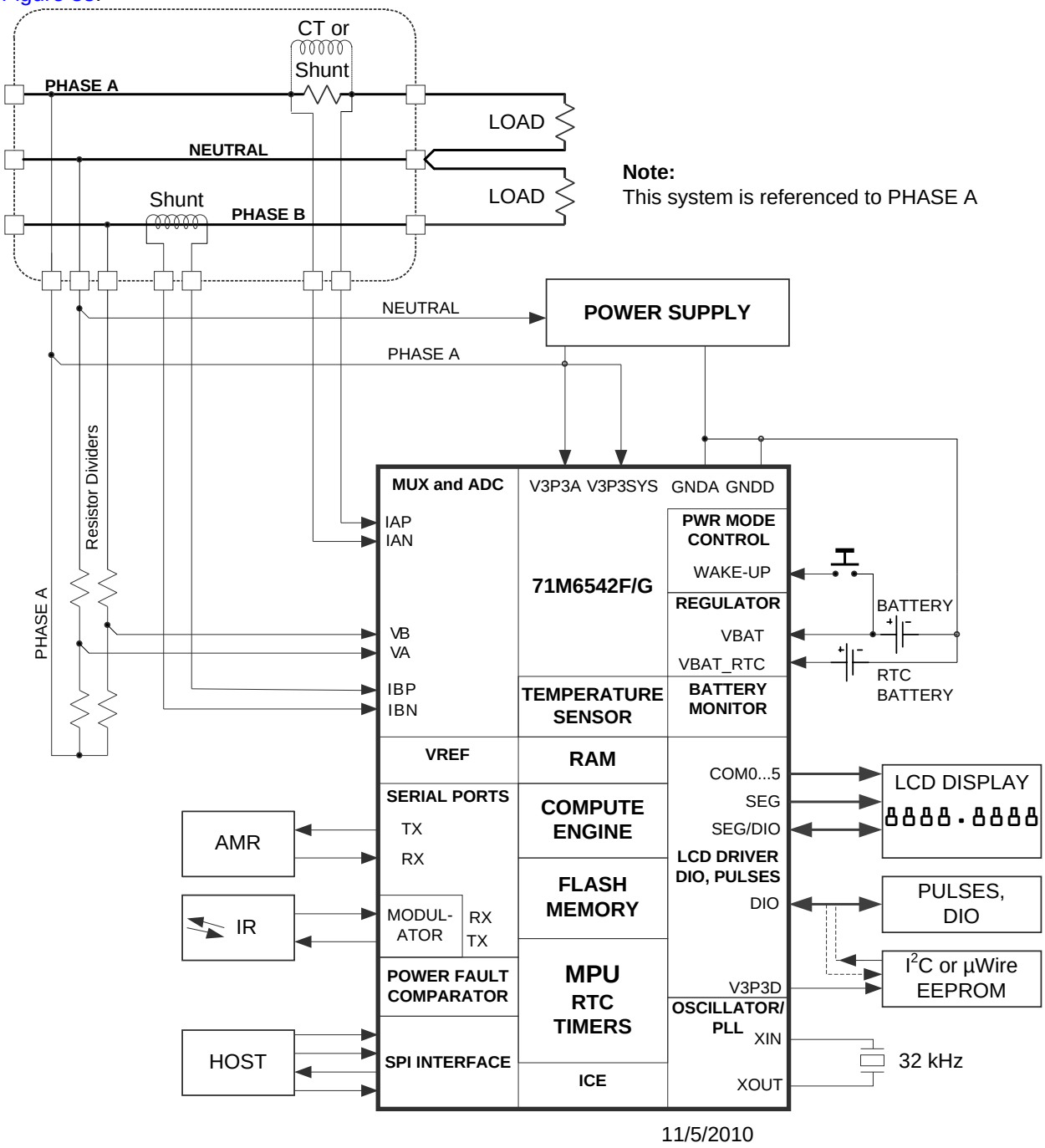

Figure 37: 71M6542F/G with Local Sensors

4.6 71M6542F/G Using 71M6x01 and Current Shunts

Figure 38 shows a typical two-phase connection for the 71M6542F/G using one isolated and one non-isolated sensor. For best performance, the IAP-IAN current sensor input is configured for differential mode (i.e., *DIFFA_E* = 1, *I/O RAM 0x210C[4]*). The 71M6x01 Isolated Sensor Interface is used to isolate phase B. The outputs of the 71M6x01 Isolated Sensor Interface are routed through a pulse transformer, which is connected to the pins IBP-IBN. The IBP-IBN pins must be configured for remote sensor communication (i.e., *RMT_E* =1, *I/O RAM 0x2709[3]*). See Figure 5 for the AFE configuration corresponding to Figure 38.

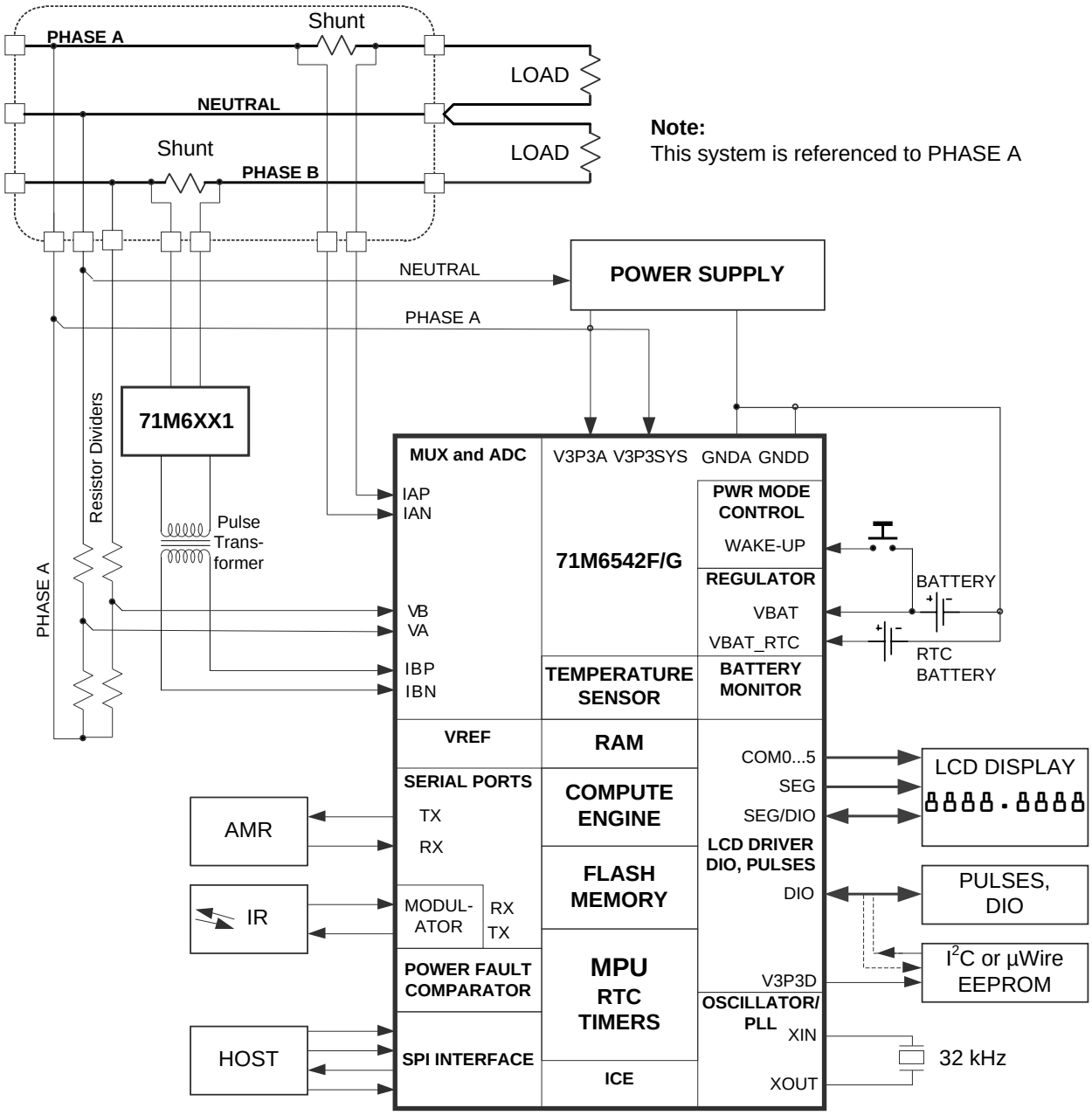

Figure 38: 71M6542F/G with 71M6x01 Isolated Sensor

4.7 Metrology Temperature Compensation

4.7.1 Voltage Reference Precision

Since the VREF band-gap amplifier is chopper-stabilized, as set by the *CHOP_E[1:0] (I/O RAM 0x2106[3:2])* control field, the dc offset voltage, which is the most significant long-term drift mechanism in the voltage references (VREF), is automatically removed by the chopper circuit. Both the 71M654x and the 71M6x01 feature chopper circuits for their respective VREF voltage reference.

Maxim implements a trimming procedure of the VREF voltage reference during the device manufacturing process.

The reference voltage (VREF) is trimmed to a target value of 1.195V. During this trimming process, the *TRIMT[7:0]* (*I/O RAM 0x2309*) value is stored in non-volatile fuses. *TRIMT[7:0]* is trimmed to a value that results in minimum VREF variation with temperature.

For the 71M654x device, the *TRIMT[7:0]* value can be read by the MPU during initialization in order to calculate parabolic temperature compensation coefficients suitable for each individual 71M654x device. The resulting temperature coefficient for VREF in the 71M654x is ±40 ppm/°C.

Considering the factory calibration temperature of VREF to be +22°C and the industrial temperature range (-40°C to +85°C), the VREF error at the temperature extremes for the 71M654x device can be calculated as:

$$(85^o C - 22^o C) \cdot 40\, ppm/^o C = +2520\, ppm = +0.252\%$$

and

$$(-40^o C - 22^o C) \cdot 40\, ppm/^o C = -2480\, ppm = -0.248\%$$

The above calculation implies that both the voltage and the current measurements are individually subject to a theoretical maximum error of approximately ±0.25%. When the voltage sample and current sample are multiplied together to obtain the energy per sample, the voltage error and current error combine resulting in approximately ±0.5% maximum energy measurement error. However, this theoretical ±0.5% error considers only the voltage reference (VREF) as an error source. In practice, other error sources exist in the system. The principal remaining error sources are the current sensors (shunts or CTs) and their corresponding signal conditioning circuits, and the resistor voltage divider used to measure the voltage. The 71M654x devices should be used in Class 1% designs, allowing sufficient margin for the other error sources in the system.

4.7.2 Temperature Coefficients for the 71M654x

The equations provided below for calculating TC1 and TC2 apply to the 71M654x. In order to obtain TC1 and TC2, the MPU reads *TRIMT[7:0]* (*I/O RAM 0x2309*) and uses the TC1 and TC2 equations provided. PPMC and PPMC2 are then calculated from TC1 and TC2, as shown. The resulting tracking of the reference voltage (VREF) is within ±40 ppm/°C. See 4.7.1 Voltage Reference Precision.

$$TC1 = 275 - 4.95 \cdot TRIMT[7:0]$$

$$TC2 = -0.557 - 2.8 \cdot 10^{-4} \cdot TRIMT[7:0]$$

$$PPMC = \frac{2^{21}}{5^7 \cdot 1.195} \cdot TC1 = 22.4632 \cdot TC1$$

$$PPMC2 = \frac{2^{29}}{5^8 \cdot 1.195} \cdot TC2 = 1150.116 \cdot TC2$$

The coefficients multiplying TC1 and TC2 to obtain PPMC and PPMC2 are derived from the 1.195V ADC voltage reference and scaling performed in the CE, as shown above.

See 4.7.3 and 4.7.4 below for further temperature compensation details.

4.7.3 Temperature Compensation for VREF with Local Sensors

This section discusses metrology temperature compensation for the meter designs where local sensors are used, as shown in Figure 35 and Figure 37.

In these configurations where all sensors are directly connected to the 71M654x, each sensor channel's accuracy is affected by the voltage variation in the 71M654x VREF due to temperature. The VREF in the 71M654x can be compensated digitally using a second-order polynomial function of temperature. The 71M654x features an on-chip temperature sensor for the purpose of temperature compensating its VREF. There are also error sources external to the 71M654x. The voltage sensor resistor dividers and the shunt current sensor and/or CT and their corresponding signal conditioning circuits also have a temperature dependency, which also may require compensation, depending on the required accuracy class. The compensation for these external error sources may be optionally lumped with the compensation for VREF by incorporating their compensation into the *PPMC* and *PPMC2* coefficients for each corresponding channel.

The MPU has the responsibility of computing the necessary compensation values required for each sensor channel based on the sensed temperature. Maxim provides demonstration code that implements the *GAIN_ADJn* compensation equation shown below. The resulting *GAIN_ADJn* values are stored by the MPU in three CE RAM locations *GAIN_ADJ0-GAIN_ADJ2* (*CE RAM 0x40-0x42*). The demonstration code thus provides a suitable implementation of temperature compensation, but other methods are possible in MPU firmware by utilizing the on-chip temperature sensors and the CE RAM *GAIN_ADJn* storage locations. The demonstration code maintains three separate sets of *PPMC* and *PPMC2* coefficients and computes three separate *GAIN_ADJn* values based on the sensed temperature using the equation below:

$$GAIN_ADJ = 16385 + \frac{10 \cdot TEMP_X \cdot PPMC}{2^{14}} + \frac{100 \cdot TEMP_X^{2} \cdot PPMC2}{2^{23}}$$

Where, *TEMP_X* is the deviation from nominal or calibration temperature expressed in multiples of 0.1 °C. For example, since the 71M654x calibration (reference) temperature is 22 ^{o}C and the measured temperature is 27 ^{o}C, then *TEMP_X* = (27-22) x 10 = 50 (decimal), which represents a +5 ^{o}C deviation from 22 ^{o}C.

Table 73 shows the three *GAIN_ADJn* equation output values and the voltage or current measurements for which they compensate.

- *GAIN_ADJ0* compensates for the VA and VB (71M6542F/G only) voltage measurements in the 71M654x and is used to compensate the VREF in the 71M654x. The designer may optionally add compensation for the resistive voltage dividers into the *PPMC* and *PPMC2* coefficients for this channel.
- *GAIN_ADJ1* provides compensation for the IA current channel and compensates for the 71M654x VREF. The designer may optionally add compensation for the shunt or CT and its corresponding signal conditioning circuit into the *PPMC* and *PPMC2* coefficients for this channel.
- *GAIN_ADJ2* provides compensation for the IB current channel and compensates for the 71M654x VREF. The designer may optionally add compensation for the CT and its signal conditioning circuit into the *PPMC* and *PPMC2* coefficients for this channel.

Table 72: GAIN_ADJn Compensation Channels

Gain Adjustment Output	CE RAM Address	71M6541D/F/G	71M6542F/G
GAIN_ADJ0	0x40	VA	VA, VB
GAIN_ADJ1	0x41	IA	IA
GAIN_ADJ2	0x42	IB	IB

In the demonstration code, temperature compensation behavior is determined by the values stored in the *PPMC* and *PPMC2* coefficients for each of the three channels, which are setup by the MPU demo code at initialization time from values that are previously stored in EEPROM.

To disable temperature compensation in the demonstration code, *PPMC* and *PPMC2* are both set to zero for each of the three *GAIN_ADJn* channels. To enable temperature compensation, the *PPMC* and *PPMC2* coefficients are set with values that match the expected temperature variation of each corresponding sensor channel.

For VREF compensation, both the linear coefficient *PPMC* and the quadratic coefficient *PPMC2*, are determined as described in 4.7.2 Temperature Coefficients for the 71M654x.

The compensation for the external error sources is accomplished by summing the *PPMC* value associated with VREF with the *PPMC* value associated with the external error source to obtain the final *PPMC* value for the sensor channel. Similarly, the *PPMC2* value associated with VREF is summed with the *PPMC2* value associated with the external error source.

To determine the contribution of the current shunt sensor or CT to the *PPMC* and *PPMC2* coefficients, the designer must either know the temperature coefficients of the shunt or the CT from its data sheet or obtain them by laboratory measurement. The designer must consider component variation across mass production to ensure that the product will meet its accuracy requirement across production.

4.7.4 Temperature Compensation for VREF with Remote Sensor

This section discusses metrology temperature compensation for the meter designs where current shunt sensors are used in conjunction with the 71M6x01 isolated sensors, as shown in Figure 36 and Figure 38.

Any sensors that are directly connected to the 71M654x are affected by the voltage variation in the 71M654x VREF due to temperature. On the other hand, sensors that are connected to the 71M6x01 isolated sensor, are affected by the VREF in the 71M6x01. The VREF in both the 71M654x and 71M6x01 can be compensated digitally using a second-order polynomial function of temperature. The 71M654x and 71M6x01 feature temperature sensors for the purposes of temperature compensating their corresponding VREF.

Referring to Figure 36 and Figure 38, the VA voltage sensor is available in the 71M6541D/F/G and 71M6542F/G and is directly connected to the 71M654x. The VB voltage sensor is available only in the 71M6542F/G and is also directly connected to it. Thus, the precision of these directly connected voltage sensors is affected by VREF in the 71M654x. The 71M654x also has one shunt current sensor (IA) which is connected directly to it, and therefore is also affected by the VREF in the 71M654x. The external current sensor and its corresponding signal conditioning circuit also has a temperature dependency, which also may require compensation, depending on the required accuracy class. Finally, the second current sensor (IB) is isolated by the 71M6x01 and depends on the VREF of the 71M6x01, plus the variation of the corresponding shunt resistance with temperature.

The MPU has the responsibility of computing the necessary compensation values required for each sensor channel based on the sensed temperature. Maxim provides demonstration code that implements the *GAIN_ADJn* compensation equation shown below. The resulting *GAIN_ADJn* values are stored by the MPU in three CE RAM locations *GAIN_ADJ0-GAIN_ADJ2* (*CE RAM 0x40-0x42*). The demonstration code thus provides a suitable implementation of temperature compensation, but other methods are possible in MPU firmware by utilizing the on-chip temperature sensors and the CE RAM *GAIN_ADJn* storage locations. The demonstration code maintains three separate sets of *PPMC* and *PPMC2* coefficients and computes three separate *GAIN_ADJn* values based on the sensed temperature using the equation below:

$$GAIN_ADJ = 16385 + \frac{10 \cdot TEMP_X \cdot PPMC}{2^{14}} + \frac{100 \cdot TEMP_X^{2} \cdot PPMC2}{2^{23}}$$

Where, *TEMP_X* is the deviation from nominal or calibration temperature expressed in multiples of 0.1 °C. For example, since the 71M654x calibration (reference) temperature is 22 ^{o}C and the measured temperature is 27 ^{o}C, then *TEMP_X* = (27-22) x 10 = 50 (decimal), which represents a +5 ^{o}C deviation from 22 ^{o}C.

Table 73 shows the three *GAIN_ADJn* equation output values and the voltage or current measurements for which they compensate.

- *GAIN_ADJ0* compensates for the VA and VB (71M6542F/G only) voltage measurements in the 71M654x and is used to compensate the VREF in the 71M654x. The designer may optionally add compensation for the resistive voltage dividers into the *PPMC* and *PPMC2* coefficients for this channel.
- *GAIN_ADJ1* provides compensation for the IA current channel and compensates for the 71M654x VREF. The designer may optionally add compensation for the shunt and its corresponding signal conditioning circuit into the *PPMC* and *PPMC2* coefficients for this channel.

- *GAIN_ADJ2* provides compensation for the remotely connected IB shunt current sensor and compensates for the 71M6x01 VREF. The designer may optionally add compensation for the shunt connected to the 71M6x01 into the *PPMC* and *PPMC2* coefficients for this channel.

Table 73: GAIN_ADJn Compensation Channels

Gain Adjustment Output	CE RAM Address	71M6541D/F/G	71M6542F/G
GAIN_ADJ0	0x40	VA	VA, VB
GAIN_ADJ1	0x41	IA	IA
GAIN_ADJ2	0x42	IB	IB

In the demonstration code, temperature compensation behavior is determined by the values stored in the *PPMC* and *PPMC2* coefficients, which are setup by the MPU demo code at initialization time from values that are previously stored in EEPROM.

To disable temperature compensation in the demonstration code, *PPMC* and *PPMC2* are both set to zero for each of the three *GAIN_ADJn* channels. To enable temperature compensation, the *PPMC* and *PPMC2* coefficients are set with values that match the expected temperature variation of the corresponding channel.

For VREF compensation, both the linear coefficient *PPMC* and the quadratic coefficient *PPMC2,* are determined for the 71M654x as described in 4.7.2 Temperature Coefficients for the 71M654x. For information on determining the *PPMC* and *PPMC2* coefficients for the 71M6x01 VREF, refer to the 71M6xxx Data Sheet.

The compensation for the external error sources is accomplished by summing the *PPMC* value associated with VREF with the *PPMC* value associated with the external error source to obtain the final *PPMC* value for the sensor channel. Similarly, the *PPMC2* value associated with VREF is summed with the *PPMC2* value associated with the external error source.

To determine the contribution of the current shunt sensor to the *PPMC* and *PPMC2* coefficients, the designer must either know the temperature coefficients of the shunt from its data sheet or obtain it by laboratory measurement. The designer must consider component variation across mass production to ensure that the product will meet its accuracy requirement across production.

4.8 Connecting I^{2}C EEPROMs

I^{2}C EEPROMs or other I^{2}C compatible devices should be connected to the DIO pins SEGDIO2 and SEGDIO3, as shown in Figure 39.

Pull-up resistors of roughly 10 kΩ to V3P3D (to ensure operation in BRN mode) should be used for both SDCK and SDATA signals. The *DIO_EEX[1:0]* (*I/O RAM 0x2456[7:6*]) field in I/O RAM must be set to 01 in order to convert the DIO pins SEGDIO2 and SEGDIO3 to I^{2}C pins SDCK and SDATA.

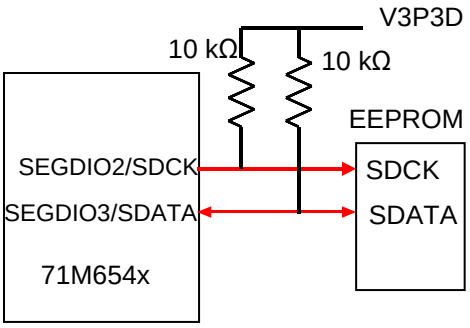

Figure 39: I^{2}C EEPROM Connection

4.9 Connecting Three-Wire EEPROMs

µWire EEPROMs and other compatible devices should be connected to the DIO pins SEGDIO2/SDCK and SEGDIO3/SDATA, as described in 2.5.9 EEPROM Interface.

4.10 UART0 (TX/RX)

The UART0 RX pin should be pulled down by a 10 kΩ resistor and additionally protected by a 100 pF ceramic capacitor, as shown in Figure 40.

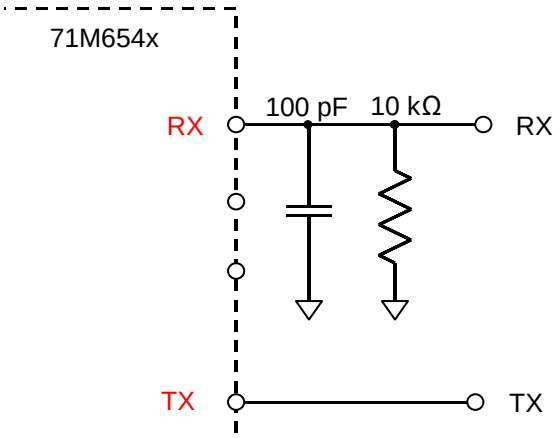

Figure 40: Connections for UART0

4.11 Optical Interface (UART1)

The OPT_TX and OPT_RX pins can be used for a regular serial interface (by connecting a RS_232 transceiver for example), or they can be used to directly operate optical components (for example, an infrared diode and phototransistor implementing a FLAG interface). Figure 41 shows the basic connections for UART1. The OPT_TX pin becomes active when the I/O RAM control field *OPT_TXE* (*I/O RAM 0x2456[3:2]*) is set to 01.

The polarity of the OPT_TX and OPT_RX pins can be inverted with the configuration bits, *OPT_TXINV (I/O RAM 0x2456[0])* and *OPT_RXINV (I/O RAM 0x2457[1])*, respectively.

The OPT_TX output may be modulated at 38 kHz when system power is present. Modulation is not available in BRN mode. The *OPT_TXMOD* bit (*I/O RAM 0x2456[1]*) enables modulation. The duty cycle is controlled by *OPT_FDC[1:0] (I/O RAM 0x2457[5:4])*, which can select 50%, 25%, 12.5%, and 6.25% duty cycle. A 6.25% duty cycle means OPT_TX is low for 6.25% of the period. The OPT_RX pin uses digital signal thresholds. It may need an analog filter when receiving modulated optical signals.

With modulation, an optical emitter can be operated at higher current than nominal, enabling it to increase the distance along the optical path.

If operation in BRN mode is desired, the external components should be connected to V3P3D. However, it is recommended to limit the current to a few mA.

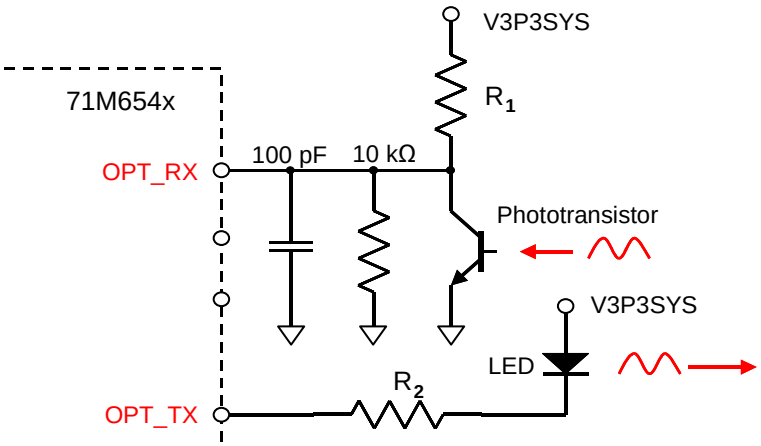

Figure 41: Connection for Optical Components

4.12 Connecting the Reset Pin

Even though a functional meter does not necessarily need a reset switch, it is useful to have a reset pushbutton for prototyping as shown in Figure 42, left side. The RESET signal may be sourced from V3P3SYS (functional in MSN mode only), V3P3D (MSN and BRN modes), or VBAT (all modes, if a battery is present), or from a combination of these sources, depending on the application.

For a production meter, the RESET pin should be protected by the external components shown in Figure 42, right side. R1 should be in the range of 100Ω and mounted as closely as possible to the IC.

Since the 71M6541D/F/G and 71M6542F/G generate their own power-on reset, a reset button or circuitry, as shown in Figure 42, is only required for test units and prototypes.

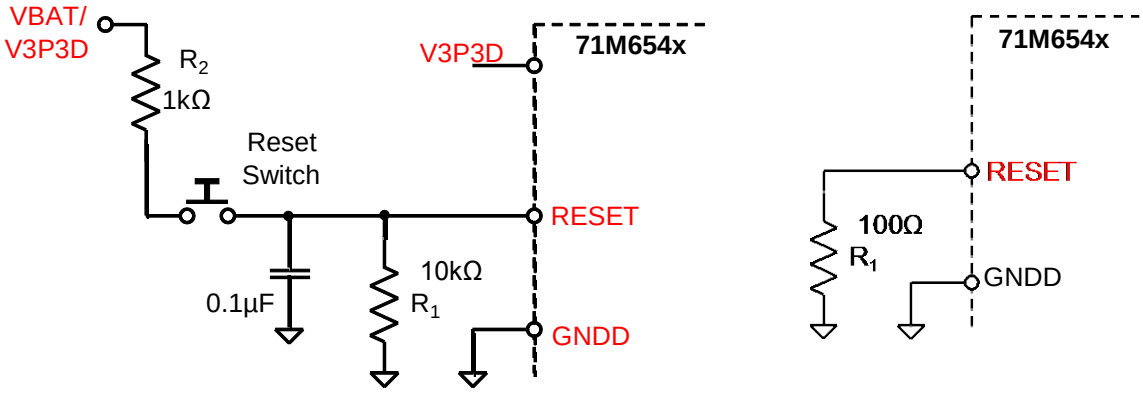

Figure 42: External Components for the RESET Pin: Push-Button (Left), Production Circuit (Right)

4.13 Connecting the Emulator Port Pins

Even when the emulator is not used, small shunt capacitors to ground (22 pF) should be used for protection from EMI as illustrated in Figure 43. Production boards should have the ICE_E pin connected to ground.

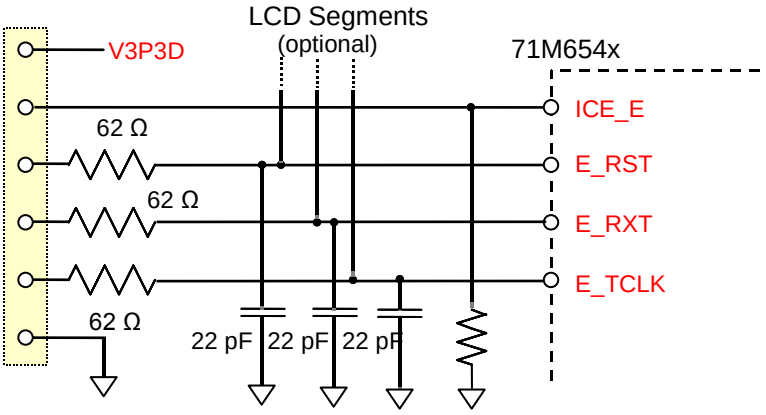

Figure 43: External Components for the Emulator Interface

4.14 Flash Programming

4.14.1 Flash Programming via the ICE Port

Operational or test code can be programmed into the flash memory using either an in-circuit emulator or the Flash Programmer Module (TFP-2) available from Maxim. The flash programming procedure uses the E_RST, E_RXTX, and E_TCLK pins.

4.14.2 Flash Programming via the SPI Port

It is possible to erase, read and program the flash memory of the SPI port. See 2.5.10 SPI Slave Port for a detailed description.

4.15 MPU Firmware Library

All application-specific MPU functions mentioned in 4 Application Information are featured in the demonstration C source code supplied by Maxim. The code is available as part of the Demonstration Kit for the 71M6541D/F/G and 71M6542F/G. The Demonstration Kits come with the preprogrammed with demo firmware and mounted on a functional sample meter Demo Board. The Demo Boards allow for quick and efficient evaluation of the IC without having to write firmware or having to supply an in-circuit emulator (ICE).

4.16 Crystal Oscillator

The oscillator of the 71M6541D/F/G and 71M6542F/G drives a standard 32.768 kHz watch crystal. The oscillator has been designed specifically to handle these crystals and is compatible with their high impedance and limited power handling capability. The oscillator power dissipation is very low to maximize the lifetime of any battery backup device attached to the VBAT_RTC pin.

Board layouts with minimum capacitance from XIN to XOUT require less battery current. Good layouts have XIN and XOUT shielded from each other and from LCD and digital signals.

CAUTION Since the oscillator is self-biasing, an external resistor must not be connected across the crystal.

4.17 Meter Calibration

Once the 71M654x energy meter device has been installed in a meter system, it must be calibrated. A complete calibration includes the following:

- Establishment of the reference temperature (e.g., typically 22 ºC)
- Calibration of the metrology section, i.e., calibration for tolerances of the current sensors, voltage dividers and signal conditioning components as well as of the internal reference voltage (VREF) at the reference temperature (e.g., typically 22 ºC).
- Calibration of the oscillator frequency using the *RTCA_ADJ[7:0]* I/O RAM register (*I/O RAM 0x2504*).

The metrology section can be calibrated using the gain and phase adjustment factors accessible to the CE. The gain adjustment is used to compensate for tolerances of components used for signal conditioning, especially the resistive components. Phase adjustment is provided to compensate for phase shifts introduced by the current sensors or by the effects of reactive power supplies.

Due to the flexibility of the MPU firmware, any calibration method, such as calibration based on energy, or current and voltage can be implemented. It is also possible to implement segment-wise calibration (depending on current range).

The 71M6541D/F/G and 71M6542F/G support common industry standard calibration techniques, such as single-point (energy-only), multi-point (energy, Vrms, Irms), and auto-calibration.

Maxim provides a calibration spreadsheet file to facilitate the calibration process. Contact your Maxim representative to obtain a copy of the latest calibration spreadsheet file for the 71M654x.

5 Firmware Interface

5.1 I/O RAM Map –Functional Order

In Table 74 and Table 75, unimplemented (U) and reserved (R) bits are shaded in light gray. Unimplemented bits are identified with a 'U'. Unimplemented bits have no memory storage, writing them has no effect, and reading them always returns zero. Reserved bits are identified with an 'R', and must always be written with a zero. Writing values other than zero to reserved bits may have undesirable side effects and must be avoided. Non-volatile bits are shaded in dark gray. Non-volatile bits are backed-up during power failures if the system includes a battery connected to the VBAT pin.

The I/O RAM locations listed in Table 74 have sequential addresses to facilitate reading by the MPU (e.g., in order to verify their contents). These I/O RAM locations are usually modified only at boot-up. The addresses shown in Table 74 are an alternative sequential address to the addresses from Table 75 which are used throughout document. For instance, *EQU[2:0]* can be accessed at *I/O RAM 0x2000[7:5]* or at *I/O RAM 0x2106[7:5]*.

Table 74: I/O RAM Map – Functional Order, Basic Configuration

Name	Addr	Bit 7	Bit 6	Bit 5	Bit 4	Bit 3	Bit 2	Bit 1	Bit 0
CE6	2000	*EQU[2:0]*			*U*	*CHOP_E[1:0]*		*RTM_E*	*CE_E*
CE5	2001	*U*			*SUM_SAMPS[12:8]*				
CE4	2002	*SUM_SAMPS[7:0]*							
CE3	2003	*U*	*U*	*CE_LCTN[5:0]*					
CE2	2004	*PLS_MAXWIDTH[7:0]*							
CE1	2005	*PLS_INTERVAL[7:0]*							
CE0	2006	*R*	*R*	*DIFFB_E*	*DIFFA_E*	*RFLY_DIS*	*FIR_LEN[1:0]*		*PLS_INV*
RCE0	2007	*CHOPR[1:0]*		*R*	*R*	*RMT_E*	*R*	*R*	*R*
RTMUX	2008	*U*	*TMUXRB[2:0]*			*U*	*TMUXRA[2:0]*		
Reserved	2009	*U*	*U*	*R*	*U*	*U*	*U*	*U*	*U*
MUX5	200A	*MUX_DIV[3:0]*				*MUX10_SEL*			
MUX4	200B	*MUX9_SEL*				*MUX8_SEL*			
MUX3	200C	*MUX7_SEL*				*MUX6_SEL*			
MUX2	200D	*MUX5_SEL*				*MUX4_SEL*			
MUX1	200E	*MUX3_SEL*				*MUX2_SEL*			
MUX0	200F	*MUX1_SEL*				*MUX0_SEL*			
TEMP	2010	*TEMP_BSEL*	*TEMP_PWR*	*OSC_COMP*	*TEMP_BAT*	*TBYTE_BUSY*	*TEMP_PER[2:0]*		
LCD0	2011	*LCD_E*	*LCD_MODE[2:0]*			*LCD_ALLCOM*	*LCD_Y*	*LCD_CLK[1:0]*	
LCD1	2012	*LCD_VMODE[1:0]*		*LCD_BLNKMAP23[5:0]*					
LCD2	2013	*LCD_BAT*	*R*	*LCD_BLNKMAP22[5:0]*					
LCD_MAP6	2014	*LCD_MAP[55:48]*							

Name	Addr	Bit 7	Bit 6	Bit 5	Bit 4	Bit 3	Bit 2	Bit 1	Bit 0
LCD_MAP5	2015	*LCD_MAP[47:40]*							
LCD_MAP4	2016	*LCD_MAP[39:32]*							
LCD_MAP3	2017	*LCD_MAP[31:24]*							
LCD_MAP2	2018	*LCD_MAP[23:16]*							
LCD_MAP1	2019	*LCD_MAP[15:8]*							
LCD_MAP0	201A	*LCD_MAP[7:0]*							
DIO_R5	201B	*U*	*U*	*U*	*U*	*U*	*DIO_RPB[2:0]*		
DIO_R4	201C	*U*	*DIO_R11[2:0]*			*U*	*DIO_R10[2:0]*		
DIO_R3	201D	*U*	*DIO_R9[2:0]*			*U*	*DIO_R8[2:0]*		
DIO_R2	201E	*U*	*DIO_R7[2:0]*			*U*	*DIO_R6[2:0]*		
DIO_R1	201F	*U*	*DIO_R5[2:0]*			*U*	*DIO_R4[2:0]*		
DIO_R0	2020	*U*	*DIO_R3[2:0]*			*U*	*DIO_R2[2:0]*		
DIO0	2021	*DIO_EEX[1:0]*		*U*	*U*	*OPT_TXE[1:0]*		*OPT_TXMOD*	*OPT_TXINV*
DIO1	2022	*DIO_PW*	*DIO_PV*	*OPT_FDC[1:0]*		*U*	*OPT_RXDIS*	*OPT_RXINV*	*OPT_BB*
DIO2	2023	*DIO_PX*	*DIO_PY*	*U*	*U*	*U*	*U*	*U*	*U*
INT1_E	2024	*EX_EEX*	*EX_XPULSE*	*EX_YPULSE*	*EX_RTCT*	*U*	*EX_RTC1M*	*EX_RTC1S*	*EX_XFER*
INT2_E	2025	*EX_SPI*	*EX_WPULSE*	*EX_VPULSE*	*U*	*U*	*U*	*U*	*U*
WAKE_E	2026				*EW_RX*	*EW_PB*	*EW_DIO4*	*EW_DIO52*[†]	*EW_DIO55*
SFMM	2080	*SFMM[7:0]**							
SFMS	2081	*SFMS[7:0]**							

Notes:

SFMM* and *SFMS* are accessible only through the SPI slave port. See **Invoking SFM (page 77) for details.

[†] 71M6542F/G only.

Table 75 lists bits and registers that may have to be accessed on a frequent basis. Reserved bits have lighter gray background, and non-volatile bits have a darker gray background.

Table 75: I/O RAM Map – Functional Order

Name	Addr	Bit 7	Bit 6	Bit 5	Bit 4	Bit 3	Bit 2	Bit 1	Bit 0
CE and ADC									
MUX5	2100	*MUX_DIV[3:0]*				*MUX10_SEL[3:0]*			
MUX4	2101	*MUX9_SEL[3:0]*				*MUX8_SEL[3:0]*			
MUX3	2102	*MUX7_SEL[3:0]*				*MUX6_SEL[3:0]*			
MUX2	2103	*MUX5_SEL[3:0]*				*MUX4_SEL[3:0]*			
MUX1	2104	*MUX3_SEL[3:0]*				*MUX2_SEL[3:0]*			
MUX0	2105	*MUX1_SEL[3:0]*				*MUX0_SEL[3:0]*			
CE6	2106	*EQU[2:0]*			*U*	*CHOP_E[1:0]*		*RTM_E*	*CE_E*
CE5	2107	*U*	*U*	*U*	*SUM_SAMPS[12:8]*				
CE4	2108	*SUM_SAMPS[7:0]*							
CE3	2109	*U*	*U*	*CE_LCTN[5:0]*					
CE2	210A	*PLS_MAXWIDTH[7:0]*							
CE1	210B	*PLS_INTERVAL[7:0]*							
CE0	210C	*R*	*R*	*DIFFB_E*	*DIFFA_E*	*RFLY_DIS*	*FIR_LEN[1:0]*		*PLS_INV*
RTM0	210D	*U*	*U*	*U*	*U*	*U*	*U*	*RTM0[9:8]*	
RTM0	210E	*RTM0[7:0]*							
RTM1	210F	*RTM1[7:0]*							
RTM2	2110	*RTM2[7:0]*							
RTM3	2111	*RTM3[7:0]*							
CLOCK GENERATION									
CKGN	2200	*U*	*U*	*ADC_DIV*	*PLL_FAST*	*RESET*	*MPU_DIV[2:0]*		
LCD/DIO									
VREF TRIM FUSES									
TRIMT	2309	*TRIMT[7:0]*							
LCD/DIO									
LCD0	2400	*LCD_E*	*LCD_MODE[2:0]*			*LCD_ALLCOM*	*LCD_Y*	*LCD_CLK[1:0]*	
LCD1	2401	*LCD_VMODE[1:0]*		*LCD_BLNKMAP23[5:0]*					
LCD2	2402	*LCD_BAT*	*R*	*LCD_BLNKMAP22[5:0]*					
LCD_MAP6	2405	*LCD_MAP[55:48]*							
LCD_MAP5	2406	*LCD_MAP[47:40]*							

Name	Addr	Bit 7	Bit 6	Bit 5	Bit 4	Bit 3	Bit 2	Bit 1	Bit 0
LCD_MAP4	2407	*LCD_MAP[39:32]*							
LCD_MAP3	2408	*LCD_MAP[31:24]*							
LCD_MAP2	2409	*LCD_MAP[23:16]*							
LCD_MAP1	240A	*LCD_MAP[15:8]*							
LCD_MAP0	240B	*LCD_MAP[7:0]*							
LCD4	240C	*U*	*U*	*U*	*U*	*U*	*LCD_RST*	*LCD_BLANK*	*LCD_ON*
LCD_DAC	240D	*U*	*U*	*U*	*LCD_DAC[4:0]*				
SEGDIO0	2410	*U*	*U*	*LCD_SEG0[5:0]*					
…	…	*U*	*U*	…					
SEGDIO15	241F	*U*	*U*	*LCD_SEG15[5:0]*					
SEGDIO16	2420	*U*	*U*	*LCD_SEGDIO16[5:0]*					
…	…	*U*	*U*	…					
SEGDIO45	243D	*U*	*U*	*LCD_SEGDIO45[5:0]*					
SEGDIO46	243E	*U*	*U*	*LCD_SEG46[5:0]*					
…	…	*U*	*U*	…					
SEGDIO50	2442	*U*	*U*	*LCD_SEG50[5:0]*					
SEGDIO51	2443	*U*	*U*	*LCD_SEGDIO51[5:0]*					
…	…	*U*	*U*	…					
SEGDIO55	2447	*U*	*U*	*LCD_SEGDIO55[5:0]*					
DIO_R5	2450	*U*	*U*	*U*	*U*	*U*	*DIO_RPB[2:0]*		
DIO_R4	2451	*U*	*DIO_R11[2:0]*			*U*	*DIO_R10[2:0]*		
DIO_R3	2452	*U*	*DIO_R9[2:0]*			*U*	*DIO_R8[2:0]*		
DIO_R2	2453	*U*	*DIO_R7[2:0]*			*U*	*DIO_R6[2:0]*		
DIO_R1	2454	*U*	*DIO_R5[2:0]*			*U*	*DIO_R4[2:0]*		
DIO_R0	2455	*U*	*DIO_R3[2:0]*			*U*	*DIO_R2[2:0]*		
DIO0	2456	*DIO_EEX[1:0]*		*U*	*U*	*OPT_TXE[1:0]*		*OPT_TXMOD*	*OPT_TXINV*
DIO1	2457	*DIO_PW*	*DIO_PV*	*OPT_FDC[1:0]*		*U*	*OPT_RXDIS*	*OPT_RXINV*	*OPT_BB*
DIO2	2458	*DIO_PX*	*DIO_PY*	*U*	*U*	*U*	*U*	*U*	*U*
NV BITS									
RESERVED	2500	*U*	*U*	*U*	*U*	*R*	*R*	*R*	*R*
RESERVED	2501	*U*	*U*	*R*	*U*	*U*	*U*	*U*	*U*
TMUX	2502	*U*	*U*	*TMUX[5:0]*					

Name	Addr	Bit 7	Bit 6	Bit 5	Bit 4	Bit 3	Bit 2	Bit 1	Bit 0
TMUX2	2503	*U*	*U*	*U*	*TMUX2[4:0]*				
RTC1	2504	*U*	*RTCA_ADJ[6:0]*						
71M6x01 Interface									
REMOTE2	2602	*RMT_RD[15:8]*							
REMOTE1	2603	*RMT_RD[7:0]*							
RBITS									
INT1_E	2700	*EX_EEX*	*EX_XPULSE*	*EX_YPULSE*	*EX_RTCT*	*U*	*EX_RTC1M*	*EX_RTC1S*	*EX_XFER*
INT2_E	2701	*EX_SPI*	*EX_WPULSE*	*EX_VPULSE*	*U*	*U*	*U*	*U*	*U*
SECURE	2702	*FLSH_UNLOCK[3:0]*				*R*	*FLSH_RDE*	*FLSH_WRE*	*R*
Analog0	2704	*VREF_CAL*	*VREF_DIS*	*PRE_E*	*ADC_E*	*BCURR*	*SPARE[2:0]*		
VERSION	2706	*VERSION[7:0]*							
INTBITS	2707	*U*	*INT6*	*INT5*	*INT4*	*INT3*	*INT2*	*INT1*	*INT0*
FLAG0	SFR E8	*IE_EEX*	*IE_XPULSE*	*IE_YPULSE*	*IE_RTCT*	*U*	*IE_RTC1M*	*IE_RTC1S*	*IE_XFER*
FLAG1	SFR F8	*IE_SPI*	*IE_WPULSE*	*IE_VPULSE*	*U*	*U*	*U*	*U*	*PB_STATE*
STAT	SFR F9	*U*	*U*	*U*	*PLL_OK*	*U*	*VSTAT[2:0]*		
REMOTE0	SFR FC		*PERR_RD*	*PERR_WR*	*RCMD[4:0]*				
SPI1	SFR FD	*SPI_CMD[7:0]*							
SPI0	2708	*SPI_STAT[7:0]*							
RCE0	2709	*CHOPR[1:0]*		*R*	*R*	*RMT_E*	*R*	*R*	*R*
RTMUX	270A	*U*	*R*	*R*	*R*	*U*	*TMUXRA[2:0]*		
DIO3	270C	*U*	*U*	*PORT_E*	*SPI_E*	*SPI_SAFE*	*U*	*U*	*U*
NV RAM and RTC									
NVRAMxx	2800-287F	*NVRAM[0] – NVRAM[7F]* – *Direct Access*							
WAKE	2880	*WAKE_TMR[7:0]*							
STEMP1	2881	*STEMP[10:3]*							
STEMP0	2882	*STEMP[2:0]*			*U*	*U*	*U*	*U*	*U*
BSENSE	2885	*BSENSE[7:0]*							
LKPADDR	2887	*LKPAUTOI*	*LKPADDR[6:0]*						
LKPDATA	2888	*LKPDAT[7:0]*							
LKPCTRL	2889	*U*	*U*	*U*	*U*	*U*	*U*	*LKP_RD*	*LKP_WR*
RTC0	2890	*RTC_WR*	*RTC_RD*	*U*	*RTC_FAIL*	*U*	*U*	*U*	*U*
RTC2	2892	*RTC_SBSC[7:0]*							

Name	Addr	Bit 7	Bit 6	Bit 5	Bit 4	Bit 3	Bit 2	Bit 1	Bit 0
RTC3	2893	*U*	*U*	*RTC_SEC[5:0]*					
RTC4	2894	*U*	*U*	*RTC_MIN[5:0]*					
RTC5	2895	*U*	*U*	*U*	*RTC_HR[4:0]*				
RTC6	2896	*U*	*U*	*U*	*U*	*U*	*RTC_DAY[2:0]*		
RTC7	2897	*U*	*U*	*U*	*RTC_DATE[4:0]*				
RTC8	2898	*U*	*U*	*U*	*U*	*RTC_MO[3:0]*			
RTC9	2899	*RTC_YR[7:0]*							
RTC10	289B	*U*	*U*	*U*	*U*	*U*	*RTC_P[16:14]*		
RTC11	289C	*RTC_P[13:6]*							
RTC12	289D	*RTC_P[5:0]*						*RTC_Q[1:0]*	
RTC13	289E	*U*	*U*	*RTC_TMIN[5:0]*					
RTC14	289F	*U*	*U*	*U*	*RTC_THR[4:0]*				
TEMP	28A0	*TEMP_BSEL*	*TEMP_PWR*	*OSC_COMP*	*TEMP_BAT*	*TBYTE_BUSY*	*TEMP_PER[2:0]*		
WF1	28B0	*WF_CSTART*	*WF_RST*	*WF_RSTBIT*	*WF_OVF*	*WF_ERST*	*WF_BADVDD*	*U*	*U*
WF2	28B1	*U*	*U*	*WF_TMR*	*WF_RX*	*WF_PB*	*WF_DIO4*	*WF_DIO52*	*WF_DIO55*
MISC	28B2	*SLEEP*	*LCD_ONLY*	*WAKE_ARM*	*U*	*U*	*U*	*U*	*U*
WAKE_E	28B3	*U*	*U*	*U*	*EW_RX*	*EW_PB*	*EW_DIO4*	*EW_DIO52* †	*EW_DIO55*
WDRST	28B4	*WD_RST*	*TEMP_START*	*U*	*U*	*U*	*U*	*U*	*U*
MPU PORTS									
P3	SFR B0	*DIO_DIR[15:12]*				*DIO[15:12]*			
P2	SFR A0	*DIO_DIR[11:8]*				*DIO[11:8]*			
P1	SFR 90	*DIO_DIR[7:4]*				*DIO[7:4]*			
P0	SFR 80	*DIO_DIR[3:0]*				*DIO[3:0]*			
FLASH									
ERASE	SFR 94	*FLSH_ERASE[7:0]*							
FLSHCTL	SFR B2	*PREBOOT*	*SECURE*	*U*	*U*	*FLSH_PEND*	*FLSH_PSTWR*	*FLSH_MEEN*	*FLSH_PWE*
FL_BANK	SFR B6	*U*	*U*	*U*	*U*	*U*	*U*	*FL_BANK[1:0]*	
PGADR	SFR B7	*FLSH_PGADR[5:0]*						*U*	*U*
I²C									
EEDATA	SFR 9E	*EEDATA[7:0]*							
EECTRL	SFR 9F	*EECTRL[7:0]*							

† 71M6542F/G only

5.2 I/O RAM Map – Alphabetical Order

Table 76 lists I/O RAM bits and registers in alphabetical order.

Bits with a write direction (W in column Dir) are written by the MPU into configuration RAM. Typically, they are initially stored in flash memory and copied to the configuration RAM by the MPU. Some of the more frequently programmed bits are mapped to the MPU SFR memory space. The remaining bits are mapped to the address space 0x2XXX. Bits with R (read) direction can be read by the MPU. Columns labeled Rst and Wk describe the bit values upon reset and wake, respectively. No entry in one of these columns means the bit is either read-only or is powered by the NV supply and is not initialized. Write-only bits return zero when they are read.

Locations that are shaded in grey are non-volatile (i.e., battery-backed).

Table 76: I/O RAM Map – Functional Order

<table>
<tr><th>Name</th><th>Location</th><th>Rst</th><th>Wk</th><th>Dir</th><th>Description</th></tr>
<tr><td>ADC_E</td><td>2704[4]</td><td>0</td><td>0</td><td>R/W</td><td>Enables ADC and VREF. When disabled, reduces bias current.</td></tr>
<tr><td>ADC_DIV</td><td>2200[5]</td><td>0</td><td>0</td><td>R/W</td><td>ADC_DIV controls the rate of the ADC and FIR clocks.
The ADC_DIV setting determines whether MCK is divided by 4 or 8:
0 = MCK/4
1 = MCK/8
The resulting ADC and FIR clock is as shown below.
<table>
<tr><th></th><th>PLL_FAST = 0</th><th>PLL_FAST = 1</th></tr>
<tr><td>MCK</td><td>6.291456 MHz</td><td>19.660800 MHz</td></tr>
<tr><td>ADC_DIV = 0</td><td>1.572864 MHz</td><td>4.9152 MHz</td></tr>
<tr><td>ADC_DIV = 1</td><td>0.786432 MHz</td><td>2.4576 MHz</td></tr>
</table></td></tr>
<tr><td>BCURR</td><td>2704[3]</td><td>0</td><td>0</td><td>R/W</td><td>Connects a 100 µA load to the battery selected by TEMP_BSEL.</td></tr>
<tr><td>BSENSE[7:0]</td><td>2885[7:0]</td><td>–</td><td>–</td><td>R</td><td>The result of the battery measurement. See 2.5.6 71M654x Battery Monitor.</td></tr>
<tr><td>CE_E</td><td>2106[0]</td><td>0</td><td>0</td><td>R/W</td><td>CE enable.</td></tr>
<tr><td>CE_LCTN[5:0]</td><td>2109[5:0]</td><td>31</td><td>31</td><td>R/W</td><td>CE program location. The starting address for the CE program is 1024*CE_LCTN.</td></tr>
<tr><td>CHIP_ID[15:8]
CHIP_ID[7:0]</td><td>2300[7:0]
2301[7:0]</td><td>0
0</td><td>0
0</td><td>R
R</td><td>These bytes contain the chip identification.</td></tr>
<tr><td>CHOP_E[1:0]</td><td>2106[3:2]</td><td>0</td><td>0</td><td>R/W</td><td>Chop enable for the reference bandgap circuit. The value of CHOP changes on the rising edge of MUXSYNC according to the value in CHOP_E:
00 = toggle[1] 01 = positive 10 = reversed 11 = toggle
[1]except at the mux sync edge at the end of an accumulation interval.</td></tr>
</table>

Name	Location	Rst	Wk	Dir	Description
CHOPR[1:0]	2709[7:6]	00	00	R/W	The CHOP settings for the remote sensor. 00 = Auto chop. Change every MUX frame. 01 = Positive 10 = Negative 11 = Auto chop. Same as 00.
DIFFA_E	210C[4]	0	0	R/W	Enables differential configuration for the IA current input (IAP-IAN).
DIFFB_E	210C[5]	0	0	R/W	Enables differential configuration for the IB current input (IBP-IBN).
DIO_R2[2:0] *DIO_R3[2:0]* *DIO_R4[2:0]* *DIO_R5[2:0]* *DIO_R6[2:0]* *DIO_R7[2:0]* *DIO_R8[2:0]* *DIO_R9[2:0]* *DIO_R10[2:0]* *DIO_R11[2:0]* *DIO_RPB[2:0]*	2455[2:0] 2455[6:4] 2454[2:0] 2454[6:4] 2453[2:0] 2453[6:4] 2452[2:0] 2452[6:4] 2451[2:0] 2451[6:4] 2450[2:0]	0 0 0 0 0 0 0 0 0 0 0	–	R/W	Connects PB and dedicated I/O pins DIO2 through DIO11 to internal resources. If more than one input is connected to the same resource, the MULTIPLE column below specifies how they are combined. *DIO_Rx* / **Resource** / **MULTIPLE** 0 / NONE / – 1 / Reserved / OR 2 / T0 (Timer0 clock or gate) / OR 3 / T1 (Timer1 clock or gate) / OR 4 / IO interrupt (int0) / OR 5 / IO interrupt (int1) / OR
DIO_DIR[15:12] *DIO_DIR[11:8]* *DIO_DIR[7:4]* *DIO_DIR[3:0]*	SFR B0[7:4] SFR A0[7:4] SFR 90[7:4] SFR 80[7:4]	F	F	R/W	Programs the direction of the first 16 DIO pins. 1 indicates output. Ignored if the pin is not configured as I/O. See *DIO_PV* and *DIO_PW* for special option for the SEGDIO0 and SEGDIO1 outputs. See *DIO_EEX* for special option for SEGDIO2 and SEGDIO3. Note that the direction of DIO pins above 15 is set by SEGDIOx[1]. See *PORT_E* to avoid power-up spikes.
DIO[15:12] *DIO[11:8]* *DIO[7:4]* *DIO[3:0]*	SFR B0[3:0] SFR A0[3:0] SFR 90[3:0] SFR 80[3:0]	F	F	R/W	The value on the first 16 DIO pins. Pins configured as LCD reads zero. When written, changes data on pins configured as outputs. Pins configured as LCD or input ignore writes. Note that the data for DIO pins above 15 is set by *SEGDIOx[0]*.
DIO_EEX[1:0]	2456[7:6]	0	–	R/W	When set, converts pins SEGDIO3/SEGDIO2 to interface with external EEPROM. SEGDIO2 becomes SDCK and SEGDIO3 becomes bi-directional SDATA, but only if *LCD_MAP[2]* and *LCD_MAP[3]* are cleared. *DIO_EEX[1:0]* / **Function** 00 / Disable EEPROM interface 01 / 2-Wire EEPROM interface 10 / 3-Wire EEPROM interface 11 / 3-Wire EEPROM interface with separate DO (DIO3) and DI (DIO8) pins.

Name	Location	Rst	Wk	Dir	Description
DIO_PV	2457[6]	0	–	R/W	Causes VARPULSE to be output on pin SEGDIO1, if *LCD_MAP[1]* = 0.
DIO_PW	2457[7]	0	–	R/W	Causes WPULSE to be output on pin SEGDIO0, if *LCD_MAP[0]* = 0.
DIO_PX	2458[7]	0	–	R/W	Causes XPULSE to be output on pin SEGDIO6 , if *LCD_MAP[6]* = 0.
DIO_PY	2458[6]	0	–	R/W	Causes YPULSE to be output on pin SEGDIO7 , if *LCD_MAP[7]* = 0.
EEDATA[7:0]	SFR 9E	0	0	R/W	Serial EEPROM interface data.
EECTRL[7:0]	SFR 9F	0	0	R/W	Serial EEPROM interface control.

Status Bit	Name	Read/ Write	Reset State	Polarity	Description
7	*ERROR*	R	0	Positive	1 when an illegal command is received.
6	*BUSY*	R	0	Positive	1 when serial data bus is busy.
5	*RX_ACK*	R	1	Positive	1 indicates that the EEPROM sent an ACK bit.

EQU[2:0]	2106[7:5]	0	0	R/W	Specifies the power equation.

EQU	Watt & VAR Formula *(WSUM/VARSUM)*	Inputs Used for Energy/Current Calculation			
		W0SUM/ VAR0SUM	*W1SUM/ VAR1SUM*	*I0SQ SUM*	*I1SQ SUM*
0	VA*IA 1 element, 2W 1ϕ	VA*IA	VA*IB[1]	IA	IB[1]
1	VA*(IA-IB)/2 1 element, 3W 1ϕ	VA*(IA-IB)/2	–	IA-IB	IB
2[†]	VA*IA + VB*IB 2 element, 3W 3ϕ Delta	VA*IA	VB*IB	IA	IB

Note:
1. Optionally, IB may be used to measure neutral current.

[†] 71M6542F/G only

<table>
<tr><th>Name</th><th>Location</th><th>Rst</th><th>Wk</th><th>Dir</th><th>Description</th></tr>
<tr><td>EX_XFER
EX_RTC1S
EX_RTC1M
EX_RTCT
EX_SPI
EX_EEX
EX_XPULSE
EX_YPULSE
EX_WPULSE
EX_VPULSE</td><td>2700[0]
2700[1]
2700[2]
2700[3]
2701[7]
2700[7]
2700[6]
2700[5]
2701[6]
2701[5]</td><td>0</td><td>0</td><td>R/W</td><td>Interrupt enable bits. These bits enable the XFER_BUSY, the RTC_1SEC, etc. The bits are set by hardware and cannot be set by writing a 1. The bits are reset by writing 0. Note that if one of these interrupts is to enabled, its corresponding 8051 EX enable bit must also be set. See 2.4.8 Interrupts for details.</td></tr>
<tr><td>EW_DIO4</td><td>28B3[2]</td><td>0</td><td>–</td><td>R/W</td><td>Connects SEGDIO4 to the WAKE logic and permits SEGDIO4 rising to wake the part. This bit has no effect unless DIO4 is configured as a digital input.</td></tr>
<tr><td>EW_DIO52</td><td>28B3[1]</td><td>0</td><td>–</td><td>R/W</td><td>Connects SEGDIO52 to the WAKE logic and permits SEGDIO52 rising to wake the part. This bit has no effect unless SEGDIO52 is configured as a digital input.
The SEGDIO52 pin is only available in the 71M6542F/G.</td></tr>
<tr><td>EW_DIO55</td><td>28B3[0]</td><td>0</td><td>–</td><td>R/W</td><td>Connects SEGDIO55 to the WAKE logic and permits SEGDIO55 rising to wake the part. This bit has no effect unless SEGDIO55 is configured as a digital input.</td></tr>
<tr><td>EW_PB</td><td>28B3[3]</td><td>0</td><td>–</td><td>R/W</td><td>Connects PB to the WAKE logic and permits a high level on PB to wake the part. PB is always configured as an input.</td></tr>
<tr><td>EW_RX</td><td>28B3[4]</td><td>0</td><td>–</td><td>R/W</td><td>Connects RX to the WAKE logic and permits RX rising to wake the part. See the WAKE description on page 87 for de-bounce issues.</td></tr>
<tr><td>FIR_LEN[1:0]</td><td>210C[2:1]</td><td>0</td><td>0</td><td>R/W</td><td>Determines the number of ADC cycles in the ADC decimation FIR filter.
PLL_FAST = 1:
<table>
<tr><th>FIR_LEN[1:0]</th><th>ADC Cycles</th></tr>
<tr><td>00</td><td>141</td></tr>
<tr><td>01</td><td>288</td></tr>
<tr><td>10</td><td>384</td></tr>
</table>
PLL_FAST = 0:
<table>
<tr><th>FIR_LEN[1:0]</th><th>ADC Cycles</th></tr>
<tr><td>00</td><td>135</td></tr>
<tr><td>01</td><td>276</td></tr>
<tr><td>10</td><td>Not Allowed</td></tr>
</table>
The ADC LSB size and full-scale values depend on the FIR_LEN[1:0] setting. Refer to 6.4.15 ADC Converter on page 150.</td></tr>
</table>

<table>
<tr><th>Name</th><th>Location</th><th>Rst</th><th>Wk</th><th>Dir</th><th>Description</th></tr>
<tr><td>FL_BANK</td><td>SFR B6</td><td>01</td><td>01</td><td>R/W</td><td><u>Flash Bank Selection (71M6541G and 71M6542G only)</u>
The program memory of the 71M6541G/71M6542G consists of a fixed lower bank of 32 KB, addressable at 0x0000 to 0x7FFF plus an upper banked area of 32 KB, addressable at 0x8000 to 0xFFFF. The I/O RAM register FL_BANK is used to switch one of four memory banks of 32 KB each into the address range from 0x8000 to 0xFFFF. Note that when FL_BANK = 0, the upper bank is the same as the lower bank.
<table>
<tr><th>FL_BANK[1:0]</th><th>Address Range for Lower Bank (0x0000-0x7FFF)</th><th>Address Range for Upper Bank (0x8000-0xFFFF)</th></tr>
<tr><td>00</td><td>0x0000-0x7FFF</td><td>0x00000-0x07FFF</td></tr>
<tr><td>01</td><td>0x0000-0x7FFF</td><td>0x08000-0x0FFFF</td></tr>
<tr><td>10</td><td>0x0000-0x7FFF</td><td>0x10000-0x17FFF</td></tr>
<tr><td>11</td><td>0x0000-0x7FFF</td><td>0x18000-0x1FFFF</td></tr>
</table></td></tr>
<tr><td>FLSH_ERASE[7:0]</td><td>SFR 94[7:0]</td><td>0</td><td>0</td><td>W</td><td><u>Flash Erase Initiate</u>
FLSH_ERASE is used to initiate either the Flash Mass Erase cycle or the Flash Page Erase cycle. Specific patterns are expected for FLSH_ERASE in order to initiate the appropriate Erase cycle.
(default = 0x00).
0x55 = Initiate Flash Page Erase cycle. Must be proceeded by a write to FLSH_PGADR[5:0] (SFR 0xB7[7:2]).
0xAA = Initiate Flash Mass Erase cycle. Must be proceeded by a write to FLSH_MEEN and the ICE port must be enabled.
Any other pattern written to FLSH_ERASE has no effect.</td></tr>
<tr><td>FLSH_MEEN</td><td>SFR B2[1]</td><td>0</td><td>0</td><td>W</td><td><u>Mass Erase Enable</u>
0 = Mass Erase disabled (default).
1 = Mass Erase enabled.
Must be re-written for each new Mass Erase cycle.</td></tr>
<tr><td>FLSH_PEND</td><td>SFR B2[3]</td><td>0</td><td>0</td><td>R</td><td>Indicates that a timed flash write is pending. If another flash write is attempted, it is ignored.</td></tr>
<tr><td>FLSH_PGADR[5:0]</td><td>SFR B7[7:2]</td><td>0</td><td>0</td><td>W</td><td><u>Flash Page Erase Address</u>
FLSH_PGADR[5:0] – Flash Page Address (page 0 thru 63) that is erased during the Page Erase cycle. (default = 0x00).
Must be re-written for each new Page Erase cycle.</td></tr>
</table>

Name	Location	Rst	Wk	Dir	Description
FLSH_PSTWR	SFR B2[2]	0	0	R/W	Enables timed flash writes. When 1, and if *CE_E* = 1, flash write requests are stored in a one-element deep FIFO and are executed when CE_BUSY falls. *FLSH_PEND* can be read to determine the status of the FIFO. If *FLSH_PSTWR* = 0 or if *CE_E* = 0, flash writes are immediate.
FLSH_PWE	SFR B2[0]	0	0	R/W	Program Write Enable 0 = MOVX commands refer to External RAM Space, normal operation (default). 1 = MOVX @*DPTR*,A moves A to External Program Space (Flash) @ *DPTR*. This bit is automatically reset after each byte written to flash. Writes to this bit are inhibited when interrupts are enabled.
FLSH_RDE	2702[2]	–	–	R	Indicates that the flash may be read by ICE or SPI slave. *FLSH_RDE* = (!*SECURE*)
FLSH_UNLOCK[3:0]	2702[7:4]	0	0	R/W	Must be a ‘2’ to enable any flash modification. See the description of Flash security for more details.
FLSH_WRE	2702[1]	–	–	R	Indicates that the flash may be written through ICE or SPI slave ports.
IE_XFER *IE_RTC1S* *IE_RTC1M* *IE_RTCT* *IE_SPI* *IE_EEX* *IE_XPULSE* *IE_YPULSE* *IE_WPULSE* *IE_VPULSE*	SFR E8[0] SFR E8[1] SFR E8[2] SFR E8[4] SFR F8[7] SFR E8[7] SFR E8[6] SFR E8[5] SFR F8[6] SFR F8[5]	0	0	R/W	Interrupt flags for external interrupts 2 and 6. These flags monitor the source of the int6 and int2 interrupts (external interrupts to the MPU core). These flags are set by hardware and must be cleared by the software interrupt handler. The *IEX2* (*SFR 0xC0[1]*) and *IEX6* (*SFR 0xC0[5]*) interrupt flags are automatically cleared by the MPU core when it vectors to the interrupt handler. *IEX2* and *IEX6* must be cleared by writing zero to their corresponding bit positions in SFR 0xC0, while writing ones to the other bit positions that are not being cleared.
INTBITS	2707[6:0]	–	–	R	Interrupt inputs. The MPU may read these bits to see the input to external interrupts INT0, INT1, up to INT6. These bits do not have any memory and are primarily intended for debug use.
LCD_ALLCOM	2400[3]	0	–	R/W	Configures SEG/COM bits as COM. Has no effect on pins whose *LCD_MAP* bit is zero.
LCD_BAT	2402[7]	0	–	R/W	Connects the LCD power supply to VBAT in all modes.
LCD_BLNKMAP23[5:0] *LCD_BLNKMAP22[5:0]*	2401[5:0] 2402[5:0]	0	–	R/W	Identifies which segments connected to SEG23 and SEG22 should blink. 1 means ‘blink.’ The most significant bit corresponds to COM5, the least significant, to COM0.

<table>
<tr><th>Name</th><th>Location</th><th>Rst</th><th>Wk</th><th>Dir</th><th>Description</th></tr>
<tr><td>LCD_CLK[1:0]</td><td>2400[1:0]</td><td>0</td><td>–</td><td>R/W</td><td>Sets the LCD clock frequency. Note: f_w = 32768 Hz
<table>
<tr><th>LCD_CLK</th><th>LCD Clock Frequency</th><th></th><th>LCD_CLK</th><th>LCD Clock Frequency</th></tr>
<tr><td>00</td><td>$\frac{f_W}{2^9}$ = 64 Hz</td><td></td><td>10</td><td>$\frac{f_W}{2^7}$ = 256 Hz</td></tr>
<tr><td>01</td><td>$\frac{f_W}{2^8}$ = 128 Hz</td><td></td><td>11</td><td>$\frac{f_W}{2^6}$ = 512 Hz</td></tr>
</table></td></tr>
<tr><td>LCD_DAC[4:0]</td><td>240D[4:0]</td><td>0</td><td>–</td><td>R/W</td><td>The LCD contrast DAC. This DAC controls the VLCD voltage and has an output range of 2.5 V to 5 V. The VLCD voltage is
VLCD = 2.5 + 2.5 * LCD_DAC[4:0]/31
Thus, the LSB of the DAC is 80.6 mV. The maximum DAC output voltage is limited by V3P3SYS, VBAT, and whether LCD_BSTE = 1.</td></tr>
<tr><td>LCD_E</td><td>2400[7]</td><td>0</td><td>–</td><td>R/W</td><td>Enables the LCD display. When disabled, VLC2, VLC1, and VLC0 are ground as are the COM and SEG outputs if their LCD_MAP bit is 1.</td></tr>
<tr><td>LCD_MAP[55:48]
LCD_MAP[47:40]
LCD_MAP[39:32]
LCD_MAP[31:24]
LCD_MAP[23:16]
LCD_MAP[15:8]
LCD_MAP[7:0]</td><td>2405[7:0]
2406[7:0]
2407[7:0]
2408[7:0]
2409[7:0]
240A[7:0]
240B[7:0]</td><td>0
0
0
0
0
0
0</td><td>–
–
–
–
–
–
–</td><td>R/W
R/W
R/W
R/W
R/W
R/W
R/W</td><td>Enables LCD segment driver mode of combined SEGDIO pins. Pins that cannot be configured as outputs (SEG48 through SEG50) become inputs with internal pull ups when their LCD_MAP bit is zero. Also, note that SEG48 through SEG50 are multiplexed with the in-circuit emulator signals. When the ICE_E pin is high, the ICE interface is enabled, and SEG48 through SEG50 become E_RXTX, E_TCLK and E_RST, respectively.</td></tr>
<tr><td>LCD_MODE[2:0]</td><td>2400[6:4]</td><td>0</td><td>–</td><td>R/W</td><td>Selects the LCD bias and multiplex mode.
<table>
<tr><th>LCD_MODE</th><th>Output</th><th>LCD_MODE</th><th>Output</th></tr>
<tr><td>000</td><td>4 states, 1/3 bias</td><td>100</td><td>Static display</td></tr>
<tr><td>001</td><td>3 states, 1/3 bias</td><td>101</td><td>5 states, 1/3 bias</td></tr>
<tr><td>010</td><td>2 states, ½ bias</td><td>110</td><td>6 states, 1/3 bias</td></tr>
<tr><td>011</td><td>3 states, ½ bias</td><td></td><td></td></tr>
</table></td></tr>
<tr><td>LCD_ON
LCD_BLANK</td><td>240C[0]
240C[1]</td><td>0
0</td><td>–
–</td><td>R/W
R/W</td><td>Turns on or off all LCD segments without changing LCD data. If both bits are set, the LCD display is turned on.</td></tr>
<tr><td>LCD_ONLY</td><td>28B2[6]</td><td>0</td><td>0</td><td>W</td><td>Puts the IC to sleep, but with LCD display still active. Ignored if system power is present. It awakens when Wake Timer times out, when certain DIO pins are raised, or when system power returns. See 3.2 Battery Modes.</td></tr>
<tr><td>LCD_RST</td><td>240C[2]</td><td>0</td><td>–</td><td>R/W</td><td>Clear all bits of LCD data. These bits affect SEGDIO pins that are configured as LCD drivers. This bit does not auto clear.</td></tr>
</table>

Name	Location	Rst	Wk	Dir	Description
LCD_SEG0[5:0] to *LCD_SEG15[5:0]*	2410[5:0] to 241F[5:0]	0	–	R/W	SEG Data for SEG0 through SEG15. DIO data for these pins is in SFR space.
LCD_SEGDIO16[5:0] to *LCD_SEGDIO45[5:0]*	2420[5:0] to 243D[5:0]	0	–	R/W	SEG and DIO data for SEGDIO16 through SEGDIO45. If configured as DIO, bit 1 is direction (1 is output, 0 is input), bit 0 is data, and the other bits are ignored.
LCD_SEG46[5:0] to *LCD_SEG50[5:0]*	243E[5:0] to 2442[5:0]	0	–	R/W	SEG data for SEG46 through SEG50. These pins cannot be configured as DIO.
LCD_SEGDIO51[5:0] to *LCD_SEGDIO55[5:0]*	2443[5:0] to 2447[5:0]	0	–	R/W	SEG and DIO data for SEGDIO51 through SEGDIO55. If configured as DIO, bit 1 is direction (1 is output, 0 is input), bit 0 is data, and the other bits are ignored. **SEGDIO52 through SEDIO54 are available only on the 71M6542F/G.**
LCD_VMODE[1:0]	2401[7:6]	00	00	R/W	Specifies how VLCD is generated. See 2.5.8.4 for the definition of V3P3L. ***LCD_VMODE*** / **Description** 11 / External VLCD 10 / LCD boost and LCD DAC enabled 01 / LCD DAC enabled 00 / No boost and no DAC. VLCD=V3P3L.
LCD_Y	2400[2]	0	–	R/W	LCD Blink Frequency (ignored if blink is disabled). 1 = 1 Hz, 0 = 0.5 Hz
LKPADDR[6:0]	2887[6:0]	0	0	R/W	The address for reading and writing the RTC lookup RAM
LKPAUTOI	2887[7]	0	0	R/W	Auto-increment flag. When set, *LKPADDR* auto-increments every time *LKP_RD* or *LKP_WR* is pulsed. The incremented address can be read at *LKPADDR[6:0]*.
LKPDAT[7:0]	2888[7:0]	0	0	R/W	The data for reading and writing the RTC lookup RAM.
LKP_RD *LKP_WR*	2889[1] 2889[0]	0 0	0 0	R/W R/W	Strobe bits for the RTC lookup RAM read and write. When set, the *LKPADDR[6:0]* field and *LKPDAT* register is used in a read or write operation. When a strobe is set, it stays set until the operation completes, at which time the strobe is cleared and *LKPADDR[6:0]* is incremented if the *LKPAUTOI* bit is set.

Name	Location	Rst	Wk	Dir	Description
MPU_DIV[2:0]	2200[2:0]	0	0	R/W	MPU clock rate is: MPU Rate = MCK Rate * $2^{-(2+MPU_DIV[2:0])}$. The maximum value for *MPU_DIV[2:0]* is 4. Based on the default values of the *PLL_FAST* bit and *MPU_DIV[2:0]*, the power up MPU rate is 6.29 MHz / 4 = 1.5725 MHz. The minimum MPU clock rate is 38.4 kHz when *PLL_FAS T* = 1.
MUX0_SEL[3:0]	2105[3:0]	0	0	R/W	Selects which ADC input is to be converted during time slot 0.
MUX1_SEL[3:0]	2105[7:4]	0	0	R/W	Selects which ADC input is to be converted during time slot 1.
MUX2_SEL[3:0]	2104[3:0]	0	0	R/W	Selects which ADC input is to be converted during time slot 2.
MUX3_SEL[3:0]	2104[7:4]	0	0	R/W	Selects which ADC input is to be converted during time slot 3.
MUX4_SEL[3:0]	2103[3:0]	0	0	R/W	Selects which ADC input is to be converted during time slot 4.
MUX5_SEL[3:0]	2103[7:4]	0	0	R/W	Selects which ADC input is to be converted during time slot 5.
MUX6_SEL[3:0]	2102[3:0]	0	0	R/W	Selects which ADC input is to be converted during time slot 6.
MUX7_SEL[3:0]	2102[7:4]	0	0	R/W	Selects which ADC input is to be converted during time slot 7.
MUX8_SEL[3:0]	2101[3:0]	0	0	R/W	Selects which ADC input is to be converted during time slot 8.
MUX9_SEL[3:0]	2101[7:4]	0	0	R/W	Selects which ADC input is to be converted during time slot 9.
MUX10_SEL[3:0]	2100[3:0]	0	0	R/W	Selects which ADC input is to be converted during time slot 10.
MUX_DIV[3:0]	2100[7:4]	0	0	R/W	*MUX_DIV[3:0]* is the number of ADC time slots in each MUX frame. The maximum number of time slots is 11.
OPT_BB	2457[0]	0	–	R/W	Configures the input of the optical port to be a DIO pin to allow it to be bit-banged. In this case, DIO5 becomes a third high speed UART. Refer to 2.5.7 UART and Optical Interface under the "**Bit Banged Optical UART (Third UART)"** sub-heading on page 58.
OPT_FDC[1:0]	2457[5:4]	0	–	R/W	Selects OPT_TX modulation duty cycle. *OPT_FDC* / **Function** 00 / 50% Low 01 / 25% Low 10 / 12.5% Low 11 / 6.25% Low
OPT_RXDIS	2457[2]	0	–	R/W	OPT_RX can be configured as an input to the optical UART or as SEGDIO55. *OPT_RXDIS* = 0 and *LCD_MAP[55]* = 0: OPT_RX *OPT_RXDIS* = 1 and *LCD_MAP[55]* = 0: DIO55 *OPT_RXDIS* = 0 and *LCD_MAP[55]* = 1: SEG55 *OPT_RXDIS* = 1 and *LCD_MAP[55]* = 1: SEG55

Name	Location	Rst	Wk	Dir	Description
OPT_RXINV	2457[1]	0	–	R/W	Inverts result from OPT_RX comparator when 1. Affects only the UART input. Has no effect when OPT_RX is used as a DIO input.
OPT_TXE [1:0]	2456[3:2]	00	–	R/W	Configures the OPT_TX output pin. If *LCD_MAP[51]* = 0: 00 = DIO51, 01 = OPT_TX, 10 = WPULSE, 11 = VARPULSE If *LCD_MAP[51]* = 1: xx = SEG51
OPT_TXINV	2456[0]	0	–	R/W	Invert OPT_TX when 1. This inversion occurs before modulation.
OPT_TXMOD	2456[1]	0	–	R/W	Enables modulation of OPT_TX. When *OPT_TXMOD* is set, OPT_TX is modulated when it would otherwise have been zero. The modulation is applied after any inversion caused by *OPT_TXINV*.
OSC_COMP	28A0[5]	0	–	R/W	Enables the automatic update of *RTC_P* and *RTC_Q* every time the temperature is measured.
PB_STATE	SFR F8[0]	0	0	R	The de-bounced state of the PB pin.
PERR_RD *PERR_WR*	SFR FC[6] SFR FC[5]	0	0	R/W	The IC sets these bits to indicate that a parity error on the remote sensor has been detected. Once set, the bits are remembered until they are cleared by the MPU.
PLL_OK	SFR F9[4]	0	0	R	Indicates that the clock generation PLL is settled.
PLL_FAST	2200[4]	0	0	R/W	Controls the speed of the PLL and MCK. 1 = 19.66 MHz (XTAL * 600) 0 = 6.29 MHz (XTAL * 192)
PLS_MAXWIDTH[7:0]	210A[7:0]	FF	FF	R/W	*PLS_MAXWIDTH[7:0]* determines the maximum width of the pulse (low-going pulse if *PLS_INV*=0 or high-going pulse if *PLS_INV*=1). The maximum pulse width is (2**PLS_MAXWIDTH[7:0]* + 1)*T_I. Where T_I is *PLS_INTERVAL[7:0]* in units of CK_FIR clock cycles. If *PLS_INTERVAL[7:0]* = 0 or *PLS_MAXWIDTH[7:0]* = 255, no pulse width checking is performed and the output pulses have 50% duty cycle. See 2.3.6.2 VPULSE and WPULSE.

Name	Location	Rst	Wk	Dir	Description
PLS_INTERVAL[7:0]	210B[7:0]	0	0	R/W	*PLS_INTERVAL[7:0]* determines the interval time between pulses. The time between output pulses is *PLS_INTERVAL[7:0]**4 in units of CK_FIR clock cycles. If *PLS_INTERVAL[7:0]* = 0, the FIFO is not used and pulses are output as soon as the CE issues them. *PLS_INTERVAL[7:0]* is calculated as follows: *PLS_INTERVAL[7:0]* = Floor (Mux frame duration in CK_FIR cycles / CE pulse updates per Mux frame / 4) For example, since the 71M654x CE code is written to generate 6 pulses in one integration interval, when the FIFO is enabled (i.e., *PLS_INTERVAL[7:0]* ≠ 0) and that the frame duration is 1950 CK_FIR clock cycles, *PLS_INTERVAL[7:0]* should be written with Floor(1950 / 6 / 4) = 81 so that the five pulses are evenly spaced in time over the integration interval and the last pulse is issued just prior to the end of the interval. See 2.3.6.2 VPULSE and WPULSE.
PLS_INV	210C[0]	0	0	R/W	Inverts the polarity of WPULSE, VARPULSE, XPULSE and YPULSE. Normally, these pulses are active low. When inverted, they become active high.
PORT_E	270C[5]	0	0	R/W	Enables outputs from the pins SEGDIO0-SEGDIO15. *PORT_E* = 0 after reset and power-up blocks the momentary output pulse that would occur on SEGDIO0 to SEGDIO15.
PRE_E	2704[5]	0	0	R/W	Enables the 8x pre-amplifier.
PREBOOT	SFRB2[7]	–	–	R	Indicates that pre-boot sequence is active.
RCMD[4:0]	SFR FC[4:0]	0	0	R/W	When the MPU writes a non-zero value to *RCMD[4:0]*, the IC issues a command to the appropriate remote sensor. When the command is complete, the IC clears *RCMD[4:0]*.
RESET	2200[3]	0	0	W	When set, writes a one to *WF_RSTBIT* and then causes a reset.
RFLY_DIS	210C[3]	0	0	R/W	Controls how the IC drives the power pulse for the 71M6x01. When set, the power pulse is driven high and low. When cleared, it is driven high followed by an open circuit fly-back interval.
RMT_E	2709[3]	0	0	R/W	Enables the remote digital isolation interface, which transforms the IBP-IBN pins into a digital balanced differential pair. Thus, enabling these pins to interface to the 71M6x01 isolated sensor.
RMT_RD[15:8] *RMT_RD[7:0]*	2602[7:0] 2603[7:0]	0	0	R	Response from remote read request.
RTC_FAIL	2890[4]	0	0	R	Indicates that a count error has occurred in the RTC and that the time is not trustworthy. This bit can be cleared by writing a 0.

Name	Location	Rst	Wk	Dir	Description
RTC_P[16:14] *RTC_P[13:6]* *RTC_P[5:0]*	289B[2:0] 289C[7:0] 289D[7:2]	4 0 0	4 0 0	R/W	RTC adjust. See 2.5.4 Real-Time Clock (RTC). 0x0FFBF ≤ *RTC_P* ≤ 0x10040 Note: *RTC_P[16:0]* and *RTC_Q[1:0]* form a single 19-bit RTC adjustment value.
RTC_Q[1:0]	289D[1:0]	0	0	R/W	RTC adjust. See 2.5.4 Real-Time Clock (RTC). Note: *RTC_P[16:0]* and *RTC_Q[1:0]* form a single 19-bit RTC adjustment value.
RTC_RD	2890[6]	0	0	R/W	Freezes the RTC shadow register so it is suitable for MPU reads. When *RTC_RD* is read, it returns the status of the shadow register: 0 = up to date, 1 = frozen.
RTC_SBSC[7:0]	2892[7:0]	–	–	R	Time remaining until the next 1 second boundary. LSB = 1/128 second.
RTC_TMIN[5:0]	289E[5:0]	0	–	R/W	The target minutes register. See *RTC_THR* below.
RTC_THR[4:0]	289F[4:0]	0	–	R/W	The target hours register. The RTC_T interrupt occurs when *RTC_MIN* becomes equal to *RTC_TMIN* and *RTC_HR* becomes equal to *RTC_THR*.
RTC_WR	2890[7]	0	0	R/W	Freezes the RTC shadow register so it is suitable for MPU writes. When *RTC_WR* is cleared, the contents of the shadow register are written to the RTC counter on the next RTC clock (~500 Hz). When *RTC_WR* is read, it returns 1 as long as *RTC_WR* is set. It continues to return one until the RTC counter actually updates.
RTC_SEC[5:0] *RTC_MIN[5:0]* *RTC_HR[4:0]* *RTC_DAY[2:0]* *RTC_DATE[4:0]* *RTC_MO[3:0]* *RTC_YR[7:0]*	2893[5:0] 2894[5:0] 2895[4:0] 2896[2:0] 2897[4:0] 2898[3:0] 2899[7:0]	– – – – – – –	– – – – – – –	R/W	The RTC interface registers. These are the year, month, day, hour, minute and second parameters for the RTC. The RTC is set by writing to these registers. Year 00 and all others divisible by 4 are defined as a leap year. SEC 00 to 59 MIN 00 to 59 HR 00 to 23 (00 = Midnight) DAY 01 to 07 (01 = Sunday) DATE 01 to 31 MO 01 to 12 YR 00 to 99 Each write operation to one of these registers must be preceded by a write to 0x2890.
RTCA_ADJ[6:0]	2504[7:0]	40	–	R/W	Analog RTC frequency adjust register.
RTM_E	2106[1]	0	0	R/W	Real Time Monitor enable. When 0, the RTM output is low.
RTM0[9:8] *RTM0[7:0]* *RTM1[7:0]* *RTM2[7:0]* *RTM3[7:0]*	210D[1:0] 210E[7:0] 210F[7:0] 2110[7:0] 2111[7:0]	0 0 0 0 0	0 0 0 0 0	R/W	Four RTM probes. Before each CE code pass, the values of these registers are serially output on the RTM pin. The RTM registers are ignored when *RTM_E* = 0. Note that RTM0 is 10 bits wide. The others assume the upper two bits are 00.

Name	Location	Rst	Wk	Dir	Description
SECURE	SFR B2[6]	0	0	R/W	Inhibits erasure of page 0 and flash addresses above the beginning of CE code as defined by *CE_LCTN[5:0]*. Also inhibits the read of flash via the SPI and ICE port.
SLEEP	28B2[7]	0	0	W	Puts the part to SLP mode. Ignored if system power is present. The part wakes when the Wake timer times out, when push button is pushed, or when system power returns.
SPI_CMD[7:0]	SFR FD[7:0]	–	–	R	SPI command register for the 8-bit command from the bus master.
SPI_E	270C[4]	1	1	R/W	SPI port enable. Enables SPI interface on pins SEGDIO36 – SEGDIO39. Requires that *LCD_MAP[36-39]* = 0.
SPI_SAFE	270C[3]	0	0	R/W	Limits SPI writes to SPI_CMD and a 16-byte region in DRAM. No other writes are permitted.
SPI_STAT[7:0]	2708[7:0]	0	0	R	*SPI_STAT* contains the status results from the previous SPI transaction. Bit 7: Ready error: The 71M654x was not ready to read or write as directed by the previous command. Bit 6: Read data parity: This bit is the parity of all bytes read from the 71M654x in the previous command. Does not include the *SPI_STAT* byte. Bit 5: Write data parity: This bit is the overall parity of the bytes written to the 71M654x in the previous command. It includes CMD and ADDR bytes. Bit 4-2: Bottom 3 bits of the byte count. Does not include ADDR and CMD bytes. One, two, and three byte instructions return 111. Bit 1: SPI FLASH mode: This bit is zero when the TEST pin is zero. Bit 0: SPI FLASH mode ready: Used in SPI FLASH mode. Indicates that the flash is ready to receive another write instruction.
STEMP[10:3] *STEMP[2:0]*	2881[7:0] 2882[7:5]	– –	– –	R R	The result of the temperature measurement.
SUM_SAMPS[12:8] *SUM_SAMPS[7:0]*	2107[4:0] 2108[7:0]	0	0	R/W	The number of multiplexer cycles per XFER_BUSY interrupt. Maximum value is 8191 cycles.
TBYTE_BUSY	28A0[3]	0	0	R	Indicates that hardware is still writing the 0x28A0 byte. Additional writes to this byte are locked out while it is one. Write duration could be as long as 6ms.
TEMP_22[10:8] *TEMP_22[7:0]*	230A[2:0] 230B[7:0]	0	–	R	Storage location for *STEMP* at 22C. *STEMP* is an 11-bit word.
TEMP_BAT	28A0[4]	0	–	R/W	Causes VBAT to be measured whenever a temperature measurement is performed.
TEMP_BSEL	28A0[7]	0	–	R/W	Selects which battery is monitored by the temperature sensor: 1 = VBAT, 0 = VBAT_RTC

Name	Location	Rst	Wk	Dir	Description
TBYTE_BUSY	28A0[3]	0	0	R	Indicates that hardware is still writing the 0x28A0 byte. Additional writes to this byte will be locked out while it is one. Write duration could be as long as 6ms.
TEMP_PER[2:0]	28A0[2:0]	0	–	R/W	Sets the period between temperature measurements. Automatic measurements can be enabled in any mode (MSN, BRN, LCD, or SLP). *TEMP_PER* = 0 disables automatic temperature updates, in which case *TEMP_START* may be used by the MPU to initiate a one-shot temperature measurement. ***TEMP_PER*** / **Time (seconds)** 0 / No temperature updates 1-6 / $2^{(3+TEMP_PER)}$ 7 / Continuous updates
TEMP_PWR	28A0[6]	0	–	R/W	Selects the power source for the temp sensor: 1 = V3P3D, 0 = VBAT_RTC. This bit is ignored in SLP and LCD modes, where the temp sensor is always powered by VBAT_RTC.
TEMP_START	28B4[6]	0	0	R/W	When *TEMP_PER* = 0 automatic temperature measurements are disabled, and *TEMP_START* may be set by the MPU to initiate a one-shot temperature measurement. *TEMP_START* is ignored in SLP and LCD modes. Hardware clears *TEMP_START* when the temperature measurement is complete.
TMUX[5:0]	2502[5:0]	–	–	R/W	Selects one of 32 signals for TMUXOUT. See 2.5.12 for details.
TMUX2[4:0]	2503[4:0]	–	–	R/W	Selects one of 32 signals for TMUX2OUT. See 2.5.12 for details.
TMUXRA[2:0]	270A[2:0]	000	000	R/W	The TMUX setting for the remote isolated sensor (71M6x01).
VERSION[7:0]	2706[7:0]	–	–	R	The silicon version index. This word may be read by firmware to determine the silicon version. ***VERSION[7:0]*** / **Silicon Version** 0001 0011 / B01 0010 0010 / B02
VREF_CAL	2704[7]	0	0	R/W	Brings the ADC reference voltage out to the VREF pin. This feature is disabled when *VREF_DIS*=1.
VREF_DIS	2704[6]	0	1	R/W	Disables the internal ADC voltage reference.

Name	Location	Rst	Wk	Dir	Description
VSTAT[2:0]	SFR F9[2:0]	–	–	R	This word describes the source of power and the status of the VDD. **VSTAT** / **Description** 000: System Power OK. V3P3A>3.0v. Analog modules are functional and accurate. [V3AOK,V3OK] = 11 001: System Power Low. 2.8v<V3P3A<3.0v. Analog modules not accurate. Switch over to battery power is imminent. [V3AOK,V3OK] = 01 010: Battery power and VDD OK. VDD>2.25v. Full digital functionality. [V3AOK,V3OK] = 00, [VDDOK,VDDgt2] = 11 011: Battery power and VDD>2.0. Flash writes are inhibited. If the TRIMVDD[5] fuse is blown, *PLL_FAST (I/O RAM 0x2200[4])* is cleared. [V3AOK,V3OK] = 00, [VDDOK,VDDgt2] = 01 101: Battery power and VDD<2.0. When VSTAT=101, processor is nearly out of voltage. Processor failure is imminent. [V3AOK,V3OK] = 00, [VDDOK,VDDgt2] = 00
WAKE_ARM	28B2[5]	0	–	R/W	Arms the WAKE timer and loads it with *WAKE_TMR[7:0]*. When *SLEEP* or *LCD_ONLY* is asserted by the MPU, the WAKE timer becomes active.
WAKE_TMR[7:0]	2880[7:0]	0	–	R/W	Timer duration is WAKE_TMR+1 seconds.
WD_RST	28B4[7]	0	0	W	Reset the WD timer. The WD is reset when a 1 is written to this bit. Writing a one clears and restarts the watch dog timer.
WF_DIO4	28B1[2]	0	–	R	DIO4 wake flag bit. If DIO4 is configured to wake the part, this bit is set whenever the de-bounced version of DIO4 rises. It is held in reset if DI04 is not configured for wakeup.
WF_DIO52	28B1[1]	0	–	R	DIO52 wake flag bit. If DIO52 is configured to wake the part, this bit is set whenever the de-bounced version of DIO52 rises. It is held in reset if DI052 is not configured for wakeup.
WF_DIO55	28B1[0]	0	–	R	DIO55 wake flag bit. If DIO55 is configured to wake the part, this bit is set whenever the de-bounced version of DIO55 rises. It is held in reset if DI055 is not configured for wakeup.
WF_TMR	28B1[5]	0	–	R	Indicates that the wake timer caused the part to wake up.
WF_PB	28B1[3]	0	–	R	Indicates that the PB caused the part to wake.
WF_RX	28B1[4]	0	–	R	Indicates that RX caused the part to wake.
WF_CSTART *WF_RST* *WF_RSTBIT* *WF_OVF* *WF_ERST* *WF_BADVDD*	28B0[7] 28B0[6] 28B0[5] 28B0[4] 28B0[3] 28B0[2]	0 1 0 0 0 0	–	R	Indicates that the Reset pin, Reset bit, ERST pin, Watchdog timer, the cold start detector, or bad VBAT caused the part to reset.

5.3 CE Interface Description

5.3.1 CE Program

The CE performs the precision computations necessary to accurately measure energy. These computations include offset cancellation, phase compensation, product smoothing, product summation, frequency detection, VAR calculation, sag detection and voltage phase measurement. All data computed by the CE is dependent on the selected meter equation as given by *EQU[2:0]* (*I/O RAM 0x2106[7:5]*).

The CE program is supplied by Maxim as a data image that can be merged with the MPU operational code for meter applications. Typically, the CE program provided with the demonstration code covers most applications and does not need to be modified. Other variations of CE code are available from Maxim. The descriptions provided in this section apply to the CE code revisions shown in Table 77. Contact the local Maxim representative to obtain the appropriate CE code required for a specific application.

Table 77. Standard CE Codes

Device	Local Sensors	Remote Sensor
71M6541D/F/G	CE41A01 (Eq. 0 or 1)	CE41B016601 CE41B016201 (Eq. 0, 1 or 2)
71M6542F/G	CE41A01 (Eq. 0 or 1) CE41A04 (Eq. 2)	

5.3.2 CE Data Format

All CE words are 4 bytes. Unless specified otherwise, they are in 32-bit two's complement format (-1 = 0xFFFFFFFF). Calibration parameters are defined in flash memory (or external EEPROM) and must be copied to CE data memory by the MPU before enabling the CE. Internal variables are used in internal CE calculations. Input variables allow the MPU to control the behavior of the CE code. Output variables are outputs of the CE calculations. The corresponding MPU address for the most significant byte is given by 0x0000 + 4 x CE_address and by 0x0003 + 4 x CE_address for the least significant byte.

5.3.3 Constants

Constants used in the CE Data Memory tables are:

- Sampling Frequency: F_S = 32768 Hz/13 = 2520.62 Hz.
- F_0 is the fundamental frequency of the mains phases.
- IMAX is the external rms current corresponding to 250 mV pk (176.8 mV rms) at the inputs IA and IB. IMAX needs to be adjusted if the pre-amplifier is activated for the IAP-IAN inputs. For a 250 µΩ shunt resistor, IMAX becomes 707 A (176.8 mV rms / 250 µΩ = 707.2 A rms).
- VMAX is the external rms voltage corresponding to 250 mV pk at the VA and VB inputs.
- NACC, the accumulation count for energy measurements is *SUM_SAMPS[12:0] (I/O RAM 0x2107[4:0], 0x2108[7:0])*.
- The duration of the accumulation interval for energy measurements is *SUM_SAMPS[12:0]* / F_S.
- X is a gain constant of the pulse generators. Its value is determined by *PULSE_FAST* and *PULSE_SLOW* (see Table 83).
- Voltage LSB (for sag threshold) = VMAX * 7.879810^{-9} V.

The system constants IMAX and VMAX are used by the MPU to convert internal digital quantities (as used by the CE) to external, i.e., metering quantities. Their values are determined by the scaling of the voltage and current sensors used in an actual meter. The LSB values used in this document relate digital quantities at the CE or MPU interface to external meter input quantities. For example, if a SAG threshold of 80 V rms is desired at the meter input, the digital value that should be programmed into *SAG_THR (CE RAM 0x24)* would be 80 Vrms * SQRT(2)/SAG_THR_{LSB}, where SAG_THR_{LSB} is the LSB value in the description of *SAG_THR* (see Table 84).

The parameters *EQU[2:0] (I/O RAM 0x2106[7:5])*, *CE_E (I/O RAM 0x2106[0])*, and *SUM_SAMPS[12:0]* are essential to the function of the CE are stored in I/O RAM (see 5.2 I/O RAM Map – Alphabetical Order for details).

5.3.4 Environment

Before starting the CE using the *CE_E* bit (*I/O RAM 0x2106[0]*), the MPU has to establish the proper environment for the CE by implementing the following steps:

- Locate the CE code in Flash memory using *CE_LCTN[5:0]* (*I/O RAM 0x2109[5:0]*)
- Load the CE data into RAM
- Establish the equation to be applied in *EQU[2:0] (I/O RAM 0x2106[7:5])*
- Establish the number of samples per accumulation period in *SUM_SAMPS[12:0] (I/O RAM 0x2107[4:0], 0x2108[7:0])*
- Establish the number of cycles per ADC multiplexer frame (*MUX_DIV[3:0] (I/O RAM 0x2100[7:4])*)
- Apply proper values to *MUXn_SEL*, as well as proper selections for *DIFFn_E* (*I/O RAM 0x210C[5:4]*) and *RMT_E* (*I/O RAM 0x2709[3]*) in order to configure the analog inputs
- Initialize any MPU interrupts, such as CE_BUSY, XFER_BUSY, or the power failure detection interrupt
- VMAX = 600 V, IMAX = 707 A, and kH = 1 Wh/pulse are assumed as default settings

When different CE codes are used, a different set of environment parameters need to be established. The exact values for these parameters are listed in the Application Notes and other documentation which accompanies the CE code.

CAUTION

Operating CE codes with environment parameters deviating from the values specified by Maxim leads to unpredictable results. See Table 1 and Table 2.

Typically, there are thirteen 32768 Hz cycles per ADC multiplexer frame (see 2.2.2 Input Multiplexer). This means that the product of the number of cycles per slot and the number of conversions per frame must be 12 (plus one settling cycle per frame, see Figure 6 and Figure 7). The default configuration is *FIR_LEN[1:0]* = 01, *I/O RAM 0x210C[2:1]*, (three cycles per conversion) and *MUX_DIV[3:0]* = 3 (3 conversions per multiplexer cycle).

Sample configurations can be copied from Demo Code provided by Maxim with the Demo Kits.

5.3.5 CE Calculations

Referring to Table 78, The MPU selects the desired equation by writing the *EQU[2:0]* (*I/O RAM 0x2106[7:5]*).

Table 78: CE *EQU* Equations and Element Input Mapping

EQU	Watt & VAR Formula *(WSUM/VARSUM)*	Inputs Used for Energy/Current Calculation			
		W0SUM/ VAR0SUM	*W1SUM/ VAR1SUM*	*I0SQ SUM*	*I1SQ SUM*
0	VA IA – 1 element, 2W 1ϕ	VA*IA	VA*IB	IA	–
1	VA*(IA-IB)/2 – 1 element, 3W 1ϕ	VA*(IA-IB)/2	–	IA-IB	IB
2†	VA*IA + VB*IB – 2 element, 3W 3ϕ Delta	VA*IA	VB*IB	IA	IB

Note:
† 71M6542F/G only.

5.3.6 CE Front End Data (Raw Data)

Access to the raw data provided by the AFE is possible by reading addresses 0-3, 9 and 10 (decimal) shown in Table 79.

The *MUX_SEL* column in Table 79 shows the *MUX_SEL* handles for the various sensor input pins. For example, if differential mode is enable via control bit *DIFFA_E* = 1 (*I/O RAM 0x210C[4]*), then the inputs IAP and IAN are combined together to form a single differential input and the corresponding *MUX_SEL* handle is 0. Similarly, the CE RAM location column provides the CE RAM address where the sample data is stored. Continuing with the same example, if *DIFFA_E* = 1, the corresponding CE RAM location where the samples for the IAP-IAN differential input are stored is 0 and CE RAM location is not disturbed.

The IB input can be configured as a direct-connected sensor (i.e., directly connected to the 71M654x) or as a remote sensor (i.e., using a 71M6x01 Isolated Sensor). If the remote sensor is disabled by *RMT_E* = 0 and differential mode is enabled by *DIFFB_E* = 1 *(I/O RAM 0x210C[5]*), then IBP and IBN form a differential input with a *MUX_SEL* handle of 2, and the corresponding samples are stored in CE RAM location 2 (CE RAM location 3 is not disturbed). If the remote sensor enable bit *RMT_E* = 1 and *DIFFB_E* = 0 or 1, then the *MUX_SEL* handle is undefined (i.e., the sensor is not connected to the 71M654x, so *MUX_SEL* does not apply, see 2.2 Analog Front End (AFE) on page 12), and the samples corresponding to this remote differential IBP-IBN input are stored in CE RAM location 2 (CE RAM location 3 is not disturbed).

The voltage sensor inputs (VA and VB) do not have any associated configuration bits. VA has a *MUX_SEL* handle value of 10, and its samples are stored in CE RAM location 10. VB has a *MUX_SEL* handle value of 9 and its samples are stored in CE RAM location 9.

Table 79: CE Raw Data Access Locations

ADC Location	Pin	*MUX_SEL* Handle				CE RAM Location			
		DIFFA_E				*DIFFA_E*			
		0	1			0	1		
ADC0	IAP	0	0			0	0		
ADC1	IAP	1				1			
		RMT_E, DIFFB_E				*RMT_E, DIFFB_E*			
		0,0	0,1	1,0	1,1	0,0	0,1	1,0	1,1
ADC2	IBP	2	2	–	–	2	2	2*	2*
ADC3	IBN	3				3			
		There are no configuration bits for ADC9, 10							
ADC9	VB†	9				9			
ADC10	VA	10				10			

Notes:
* Remote interface data.
† 71M6542F/G only.

5.3.7 FCE Status and Control

The CE Status Word, *CESTATUS*, is useful for generating early warnings to the MPU (Table 80). It contains sag warnings for phase A and B, as well as *F0*, the derived clock operating at the fundamental input frequency. The MPU can read the CE status word at every CE_BUSY interrupt. Since the CE_BUSY interrupt occurs at 2520.6 Hz, it is desirable to minimize the computation required in the interrupt handler of the MPU.

Table 80: *CESTATUS* Register

CE Address	Name	Description
0x80	*CESTATUS*	See description of *CESTATUS* bits in Table 81.

CESTATUS provides information about the status of voltage and input AC signal frequency, which are useful for generating an early power fail warning to initiate necessary data storage. *CESTATUS* represents the

status flags for the preceding CE code pass (CE_BUSY interrupt). The significance of the bits in *CESTATUS* is shown in Table 81.

Table 81: *CESTATUS* (*CE RAM 0x80*) Bit Definitions

CESTATUS bit	Name	Description
31:4	Not Used	These unused bits are always zero.
3	*F0*	*F0* is a square wave at the exact fundamental input frequency.
2	Not Used	This unused bit is always zero.
1	*SAG_B*	Normally zero. Becomes one when VB remains below *SAG_THR* for *SAG_CNT* samples. Does not return to zero until VB rises above *SAG_THR*.
0	*SAG_A*	Normally zero. Becomes one when VA remains below *SAG_THR* for *SAG_CNT* samples. Does not return to zero until VA rises above *SAG_THR*.

The CE is initialized by the MPU using *CECONFIG* (Table 82). This register contains in packed form *SAG_CNT*, *FREQSEL[1:0]*, *EXT_PULSE*, *PULSE_SLOW* and *PULSE_FAST*. The *CECONFIG* bit definitions are given in Table 83.

Table 82: *CECONFIG* Register

CE Address	Name	Data	Description
0x20	*CECONFIG*	0x0030DB00[1] 0x00B0DB00[2]	See description of the *CECONFIG* bits in Table 83.

1. Default for CE41A01 (71M6541D/F/G or CE41A04 (71M6542F/G) CE code for use with local sensors.
2. Default for CE41B016201 and CE41B016601 codes that support the 71M6x01 remote sensors.

Table 83: *CECONFIG* (*CE RAM 0x20*) Bit Definitions

CECONFIG bit	Name	Default	Description
23	*Reserved*	0	Reserved (can be used by the MPU to indicate that the 71M6x01 is being used; CE does not use this).
22	*EXT_TEMP*	0	When 1, the MPU controls temperature compensation via the *GAIN_ADJn* registers (*CE RAM 0x40-0x42*), when 0, the CE is in control.
21	*EDGE_INT*	1	When 1, XPULSE produces a pulse for each zero-crossing of the mains phase selected by *FREQSEL[1:0]* , which can be used to interrupt the MPU.
20	*SAG_INT*	1	When 1, activates YPULSE output when a sag condition is detected.
19:8	*SAG_CNT*	252 (0xFC)	The number of consecutive voltage samples below *SAG_THR* (*CE RAM 0x24*) before a sag alarm is declared. The default value is equivalent to 100 ms.
7:6	*FREQSEL[1:0]*	0	*FREQSEL[1:0]* selects the phase to be used for the frequency monitor, sag detection, and for the zero crossing counter (*MAINEDGE_X*, *CE RAM 0x83*). *FREQ SEL[1:0]* — 0 0 — Phase Selected: A 0 1 — B* 1 X — Not allowed *71M6542F/G only

5	*EXT_PULSE*	1	When zero, causes the pulse generators to respond to internal data (WPULSE = *WSUM_X (CE RAM 0x84)*, VPULSE = *VARSUM_X (CE RAM 0x88))*. Otherwise, the generators respond to values the MPU places in *APULSEW* and *APULSER (CE RAM 0x45 and 0x49)*.
4:2	*Reserved*	0	Reserved.
1	*PULSE_FAST*	0	When *PULSE_FAST* = 1, the pulse generator input is increased 16x. When *PULSE_SLOW* = 1, the pulse generator input is reduced by a factor of 64. These two parameters control the pulse gain factor X (see table below). Allowed values are either 1 or 0. Default is 0 for both (X = 6).
0	*PULSE_SLOW*	0	

PULSE_FAST	*PULSE_SLOW*	*X*
0	0	$1.5 * 2^2 = 6$
1	0	$1.5 * 2^6 = 96$
0	1	$1.5 * 2^{-4} = 0.09375$
1	1	Do not use

The FREQSEL[1:0] field in *CECONFIG* (*CE RAM 0x20[7:6]*) selects the phase that is utilized to generate a sag interrupt. Thus, a *SAG_INT* event occurs when the selected phase has satisfied the sag event criteria as set by the *SAG_THR* (*CE RAM 0x24*) register and the *SAG_CNT* field in *CECONFIG (CE RAM 0x20[19:8]).* When the *SAG_INT* bit (*CE RAM 0x20[20]*) is set to 1, a sag event generates a transition on the YPULSE output. In a two-phase system (71M6542F/G), and after a sag interrupt, the MPU should change the *FREQSEL[1:0]* setting to select the other phase, if it is powered. Even though a sag interrupt is only generated on the selected phase, both phases are simultaneously checked for sag. The presence of power on a given phase can be sensed by directly checking the *SAG_A* and *SAG_B* bits in *CESTATUS* (*CE RAM 0x80[0:1]).*

The *EXT_TEMP* bit enables temperature compensation by the MPU, when set to 1. When 0, internal (CE) temperature compensation is enabled.

The CE pulse generator can be controlled by either the MPU (external) or CE (internal) variables. Control is by the MPU if the *EXT_PULSE* bit = 1 (*CE RAM 0x20[5]*). In this case, the MPU controls the pulse rate (external pulse generation) by placing values into *APULSEW* and *APULSER (CE RAM 0x45 and 0x49)*. By setting *EXT_PULSE* = 0, the CE controls the pulse rate based on *WSUM_X (CE RAM 0x84)* and *VARSUM_X (CE RAM 0x88).*

✓ The 71M6541D/F/G and 71M6542F/G Demo Code creep function halts both internal and external pulse generation.

Table 84: Sag Threshold and Gain Adjust Control

CE Address	Name	Default	Description
0x24	*SAG_THR*	$2.39*10^7$	The voltage threshold for sag warnings. The default value is equivalent to 113Vpk or 80 Vrms if VMAX = 600 Vrms. $$SAG_THR = \frac{Vrms \cdot \sqrt{2}}{VMAX \cdot 7.8798 \cdot 10^{-9}}$$
0x40	*GAIN_ADJ0*	16384	This register scales the voltage measurement channels VA and VB*. The default value of 16384 is equivalent to unity gain (1.000). *71M6542F/G only
0x41	*GAIN_ADJ1*	16384	This register scales the IA current channel for Phase A. The default value of 16384 is equivalent to unity gain (1.000).
0x42	*GAIN_ADJ2*	16384	This register scales the IB current channel for Phase B. The default value of 16384 is equivalent to unity gain (1.000).

5.3.8 CE Transfer Variables

When the MPU receives the XFER_BUSY interrupt, it knows that fresh data is available in the transfer variables. CE transfer variables are modified during the CE code pass that ends with an XFER_BUSY interrupt. They remain constant throughout each accumulation interval. In this data sheet, the names of CE transfer variables always end with "_X". The transfer variables can be categorized as:

- Fundamental energy measurement variables
- Instantaneous (RMS) values
- Other measurement parameters

5.3.8.1 Fundamental Energy Measurement Variables

Table 85 and Table 86 describe each transfer variable for fundamental energy measurement. All variables are signed 32-bit integers. Accumulated variables such as WSUM are internally scaled so they have at least 2x margin before overflow when the integration time is one second. Additionally, the hardware does not permit output values to fold back upon overflow.

Table 85: CE Transfer Variables (with Local Sensors)

CE Address	Name	Description	Configuration
0x84†	*WSUM_X*	The signed sum: *W0SUM_X+W1SUM_X*. Not used for *EQU[2:0]* = 0 (*I/O RAM 0x2106[7:5]*) and *EQU[2:0]* = 1.	Figure 35 (page 93) Figure 37 (page 95)
0x85	*W0SUM_X*	The sum of Wh samples from each wattmeter element. LSB = $9.4045*10^{-13}$ * VMAX * IMAX Wh. For ce41a04: LSB = $6.6952*10^{-13}$ * VMAX * IMAX Wh.	
0x86	*W1SUM_X*		
0x88†	*VARSUM_X*	The signed sum: *VAR0SUM_X+VAR1SUM_X*. Not used for *EQU[2:0]* = 0 and *EQU[2:0]* = 1.	
0x89	*VAR0SUM_X*	The sum of VARh samples from each wattmeter element. LSB = $9.4045*10^{-13}$ * VMAX * IMAX VARh. For ce41a04, LSB = $6.6952*10^{-13}$ * VMAX * IMAX VARh.	
0x8A	*VAR1SUM_X*		
Note: † 71M6542 only.			

Table 86: CE Transfer Variables (with Remote Sensor)

CE Address	Name	Description	Configuration
0x84†	*WSUM_X*	The signed sum: *W0SUM_X+W1SUM_X*. Not used for *EQU[2:0]* = 0 (*I/O RAM 0x2106[7:5]*) and *EQU[2:0]* = 1.	Figure 36 (page 94) Figure 38 (page 96)
0x85	*W0SUM_X*	The sum of Wh samples from each wattmeter element. LSB = $1.55124*10^{-12}$ * VMAX* IMAX Wh.	
0x86	*W1SUM_X*		
0x88†	*VARSUM_X*	The signed sum: *VAR0SUM_X+VAR1SUM_X*. Not used for *EQU[2:0]* = 0 and *EQU[2:0]* = 1.	
0x89	*VAR0SUM_X*	The sum of VARh samples from each wattmeter element. LSB = $1.55124*10^{-12}$ *VMAX* IMAX VARh.	
0x8A	*VAR1SUM_X*		
Note: † 71M6542 only.			

WSUM_X (*CE RAM 0x84*) and *VARSUM_X (CE RAM 0x88)* are the signed sum of Phase-A and Phase-B Wh or VARh values according to the metering equation specified in the I/O RAM control field *EQU[2:0] (I/O RAM 0x2106[7:5])*. *WxSUM_X* (x = 0 or 1, *CE RAM 0x85 and 0x86*) is the Wh value accumulated for phase x in the last accumulation interval and can be computed based on the specified LSB value.

5.3.8.2 Instantaneous Energy Measurement Variables

IxSQSUM_X and *VxSQSUM* (see Table 87) are the sum of the squared current and voltage samples acquired during the last accumulation interval.

Table 87: CE Energy Measurement Variables (with Local Sensors)

CE Address	Name	Description	Configuration
0x8C	*I0SQSUM_X*	The sum of squared current samples from each element. LSB = $9.4045*10^{-13}$ $IMAX^2$ A^2h For ce41a04, LSB = $6.6952*10^{-13}$ $IMAX^2$ A^2h. When *EQU* = 1, *I0SQSUM_X* is based on IA and IB.	Figure 35 (page 93) Figure 37 (page 95)
0x8D	*I1SQSUM_X*		
0x90	*V0SQSUM_X*	The sum of squared voltage samples from each element. LSB = $9.4045*10^{-13}$ $VMAX^2$ V^2h For ce41a04, LSB = 6.6952*10^$^{-13}$ $VMAX^2$ V^2h.	
0x91†	*V1SQSUM_X*		
† 71M6542 only.			

Table 88: CE Energy Measurement Variables (with Remote Sensor)

CE Address	Name	Description	Configuration
0x8C	*I0SQSUM_X*	The sum of squared current samples from each element. LSB_I = $2.55872*10^{-12}$ * $IMAX^2$ A^2h When *EQU* = 1, *I0SQSUM_X* is based on IA and IB.	Figure 36 (page 94) Figure 38 (page 96)
0x8D	*I1SQSUM_X*		
0x90	*V0SQSUM_X*	The sum of squared voltage samples from each element. LSB_V= $9.40448*10^{-13}$ * $VMAX^2$ V^2h	
0x91†	*V1SQSUM_X*		
† 71M6542 only.			

The RMS values can be computed by the MPU from the squared current and voltage samples as follows:

$$Ix_{RMS} = \sqrt{\frac{IxSQSUM \cdot LSB_I \cdot 3600 \cdot F_S}{N_{ACC}}} \qquad Vx_{RMS} = \sqrt{\frac{VxSQSUM \cdot LSB_V \cdot 3600 \cdot F_S}{N_{ACC}}}$$

Note: N_{ACC} = *SUM_SAMPS[12:0]* (*CE RAM 0x23*).

Other Transfer variables include those available for frequency and phase measurement, and those reflecting the count of the zero-crossings of the mains voltage and the battery voltage. These transfer variables are listed in Table 89.

MAINEDGE_X (*CE RAM 0x83*) reflects the number of half-cycles accounted for in the last accumulated interval for the AC signal of the phase specified in the *FREQSEL[1:0]* field in *CECONFIG* (*CE RAM 0x20[7:6]*). *MAINEDGE_X* is useful for implementing a real-time clock based on the input AC signal.

Table 89: Other Transfer Variables

CE Address	Name	Description
0x82	*FREQ_X*	Fundamental frequency: LSB $\equiv \frac{2520.6Hz}{2^{32}} \approx 0.509 \cdot 10^{-6}$ *Hz(for Local)* LSB $\equiv \frac{2520.6Hz}{2^{32}} \approx 0.587 \cdot 10^{-6}$ *Hz(for Remote)*
0x83	*MAINEDGE_X*	The number of edge crossings of the selected voltage in the previous accumulation interval. Edge crossings are either direction and are de-bounced.

5.3.9 Pulse Generation

Table 90 describes the CE pulse generation parameters.

The combination of the *CECONFIG PULSE_SLOW* and *PULSE_FAST* bits (*CE RAM 0x20[0:1])* controls the speed of the pulse rate. The default values of 0 and 0 maintain the original pulse rate given by the Kh equation.

WRATE (*CE RAM 0x21*) controls the number of pulses that are generated per measured Wh and VARh quantities. The lower *WRATE* is, the slower the pulse rate for the measured energy quantity. The metering constant Kh is derived from *WRATE* as the amount of energy measured for each pulse. That is, if Kh = 1Wh/pulse, a power applied to the meter of 120 V and 30 A results in one pulse per second. If the load is 240 V at 150 A, ten pulses per second are generated.

Control is transferred to the MPU for pulse generation if *EXT_PULSE* = 1 (*CE RAM 0x20[5]*). In this case, the pulse rate is determined by *APULSEW* and *APULSER (CE RAM 0x45 and 0x49)*. The MPU has to load the source for pulse generation in *APULSEW* and *APULSER* to generate pulses. Irrespective of the *EXT_PULSE* status, the output pulse rate controlled by *APULSEW* and *APULSER* is implemented by the CE only. By setting *EXT_PULSE* = 1, the MPU is providing the source for pulse generation. If *EXT_PULSE* is 0, *W0SUM_X (CE RAM 0x85)* and *VAR0SUM_X (CE RAM 0x89)* are the default pulse generation sources. In this case, creep cannot be controlled since it is an MPU function.

The maximum pulse rate is $3*F_S$ = 7.56 kHz.

See 2.3.6.2 VPULSE and WPULSE for details on how to adjust the timing of the output pulses.

The maximum time jitter is 1/6 of the multiplexer cycle period (nominally 67 µs) and is independent of the number of pulses measured. Thus, if the pulse generator is monitored for one second, the peak jitter is 67 ppm. After 10 seconds, the peak jitter is 6.7 ppm. The average jitter is always zero. If it is attempted to drive either pulse generator faster than its maximum rate, it simply outputs at its maximum rate without exhibiting any rollover characteristics. The actual pulse rate, using *WSUM* as an example, is:

$$RATE = \frac{WRATE \cdot WSUM \cdot F_S \cdot X}{2^{46}} Hz,$$

where F_S = sampling frequency (2520.6 Hz), X = Pulse speed factor derived from the CE variables *PULSE_SLOW* (CE RAM 0x20[0]) and *PULSE_FAST* (*CE RAM 0x20[1]*).

Table 90: CE Pulse Generation Parameters

CE Address	Name	Default	Description
0x21	*WRATE*	547	$$Kh = \frac{VMAX \cdot IMAX \cdot K}{WRATE \cdot N_{ACC} \cdot X} \cdot Wh/\,pulse$$ where: K = 66.1782 (Local Sensors) K = 109.1587 (Remote Sensor) K = 47.1132 (ce41a04 and Local Sensors) N_{ACC} = *SUM_SAMPS[12:0] (CE RAM 0x23)* See Table 83 for the definition of X. The default value yields 1.0 Wh/pulse for VMAX = 600 V and IMAX = 208 A. The maximum value for WRATE is 32,768 (2^{15}).
0x22	*KVAR*	6444	Scale factor for VAR measurement.
0x23	*SUM_SAMPS*	2520	*SUM_SAMPS* (N_{ACC}).
0x45	*APULSEW*	0	Wh pulse (WPULSE) generator input to be updated by the MPU when using external pulse generation. The output pulse rate is: *APULSEW* * F_S * 2^{-32} * *WRATE* * *X* * 2^{-14}. This input is buffered and can be updated by the MPU during a conversion interval. The change takes effect at the beginning of the next interval.
0x46	*WPULSE_CTR*	0	WPULSE counter.
0x47	*WPULSE_FRAC*	0	Unsigned numerator, containing a fraction of a pulse. The value in this register always counts up towards the next pulse.
0x48	*WSUM_ACCUM*	0	Roll-over accumulator for WPULSE.
0x49	*APULSER*	0	VARh (VPULSE) pulse generator input.
0x4A	*VPULSE_CTR*	0	VPULSE counter.
0x4B	*VPULSE_FRAC*	0	Unsigned numerator, containing a fraction of a pulse. The value in this register always counts up towards the next pulse.
0x4C	*VSUM_ACCUM*	0	Roll-over accumulator for VPULSE.

5.3.10 Other CE Parameters

Table 91 shows the CE parameters used for suppression of noise due to scaling and truncation effects.

Table 91: CE Parameters for Noise Suppression and Code Version

CE Address	Name	Default	Description
0x25	*QUANT_VA*	0	Compensation factors for truncation and noise in voltage, current, real energy and reactive energy for phase A.
0x26	*QUANT_IA*	0	
0x27	*QUANT_A*	0	
0x28	*QUANT_VARA*	0	
0x29 †	*QUANT_VB*	0	Compensation factors for truncation and noise in voltage, current, real energy and reactive energy for phase B. † 71M6542 only.
0x2A	*QUANT_IB*	0	
0x2B	*QUANT_B*	0	
0x2C	*QUANT_VARB*	0	
0x38	0x43453431		CE file name identifier in ASCII format (CE41a01f). These values are overwritten as soon as the CE starts
0x39	0x6130316B		
0x3A	0x00000000		

LSB weights for use with Local Sensors:

$$QUANT_Ix_LSB = 5.08656 \cdot 10^{-13} \cdot IMAX^2 (Amps^2)$$

For ce41a04, $QUANT_Ix_LSB = 3.6212 \cdot 10^{-13} \cdot IMAX^2 \ (Amps^2)$

$$QUANT_Wx_LSB = 1.04173 \cdot 10^{-9} \cdot VMAX \cdot IMAX \ (Watts)$$

For ce41a04, $QUANT_Wx_LSB = 7.4162 \cdot 10^{-10} \cdot VMAX \cdot IMAX \ \ (Watts)$

$$QUANT_VARx_LSB = 1.04173 \cdot 10^{-9} \cdot VMAX \cdot IMAX \ (Vars)$$

For ce41a04, $QUANT_VARx_LSB = 7.4162 \cdot 10^{-10} \cdot VMAX \cdot IMAX \ (Vars)$

LSB weights for use with the 71M6x01 isolated sensors:

$$QUANT_Ix_LSB = 1.38392 \cdot 10^{-12} \cdot IMAX^2 (Amps^2)$$

$$QUANT_Wx_LSB = 1.71829 \cdot 10^{-9} \cdot VMAX \cdot IMAX \ (Watts)$$

$$QUANT_VARx_LSB = 1.71829 \cdot 10^{-9} \cdot VMAX \cdot IMAX \ (Vars)$$

5.3.11 CE Calibration Parameters

Table 92 lists the parameters that are typically entered to effect calibration of meter accuracy.

Table 92: CE Calibration Parameters

<table>
<tr><th>CE Address</th><th>Name</th><th>Default</th><th>Description</th></tr>
<tr><td>0x10</td><td>CAL_IA</td><td>16384</td><td rowspan="4">These constants control the gain of their respective channels. The nominal value for each parameter is 2^{14} = 16384. The gain of each channel is directly proportional to its CAL parameter. Thus, if the gain of a channel is 1% slow, CAL should be increased by 1%. Refer to the 71M6541 Demo Board User's Manual for the equations to calculate these calibration parameters.
† 71M6542 only.</td></tr>
<tr><td>0x11</td><td>CAL_VA</td><td>16384</td></tr>
<tr><td>0x13</td><td>CAL_IB</td><td>16384</td></tr>
<tr><td>0x14†</td><td>CAL_VB</td><td>16384</td></tr>
<tr><td>0x12</td><td>PHADJ_A</td><td>0</td><td rowspan="2">These constants control the CT phase compensation. Compensation does not occur when PHADJ_X = 0. As PHADJ_X is increased, more compensation (lag) is introduced. The range is ± 215 – 1. If it is desired to delay the current by the angle Φ, the equations are:
$PHADJ_X = 2^{20}\frac{0.02229 \cdot TAN\Phi}{0.1487 - 0.0131 \cdot TAN\Phi}$ at 60Hz
$PHADJ_X = 2^{20}\frac{0.0155 \cdot TAN\Phi}{0.1241 - 0.009695 \cdot TAN\Phi}$ at 50Hz</td></tr>
<tr><td>0x15</td><td>PHADJ_B</td><td>0</td></tr>
<tr><td>0x12</td><td>DLYADJ_A</td><td>0</td><td rowspan="2">The shunt delay compensation is obtained using the equation provided below:
$DLYADJ_X = \Delta_{degrees}\left(1 + 0.1\Delta_{degrees}\right)2^{14}\frac{2\pi}{360}\frac{a^2\cos^2\left(\frac{2\pi f}{f_s}\right) + 2ab\cos\left(\frac{2\pi f}{f_s}\right) + b}{c\sin\left(\frac{2\pi f}{f_s}\right)}$
where:
$a = 2A$
$b = A^2 + 1$
$c = 2A^2 + 4A\cos\left(\frac{2\pi f}{f_s}\right) + 2$
Where, f is the mains frequency and f_s is the sampling frequency. The table below provides the value of A for each current channel:
<table>
<tr><th rowspan="2">Channel</th><th colspan="2">Value of A (decimal)</th></tr>
<tr><th>Eq. 0 or 2</th><th>Eq. 1</th></tr>
<tr><td>DLYADJ_A</td><td>15811 / 2^{14}</td><td>6811 / 2^{14}</td></tr>
<tr><td>DLYADJ_B</td><td>-1384 / 2^{14}</td><td>-1384 / 2^{14}</td></tr>
</table></td></tr>
<tr><td>0x15</td><td>DLYADJ_B</td><td>0</td></tr>
</table>

5.3.12 CE Flow Diagrams

Figure 44 through Figure 46 show the data flow through the CE in simplified form. Functions not shown include delay compensation, sag detection, scaling and the processing of meter equations.

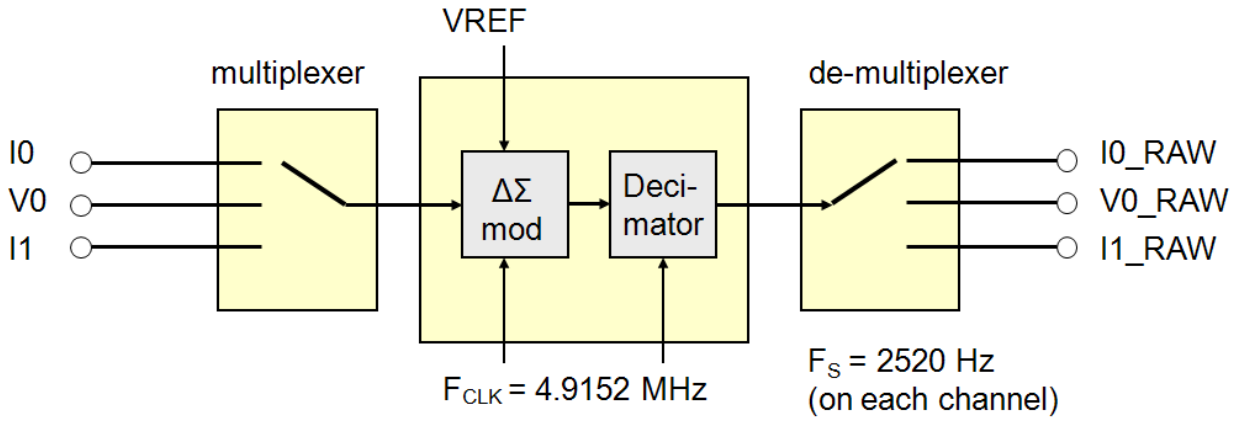

Figure 44: CE Data Flow: Multiplexer and ADC

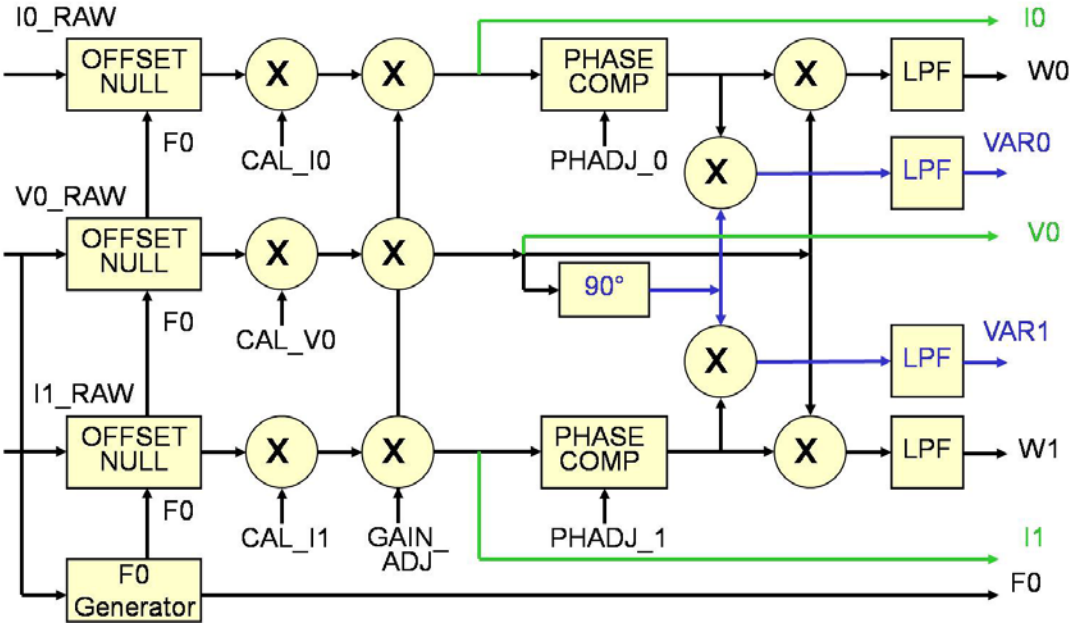

Figure 45: CE Data Flow: Scaling, Gain Control, Intermediate Variables

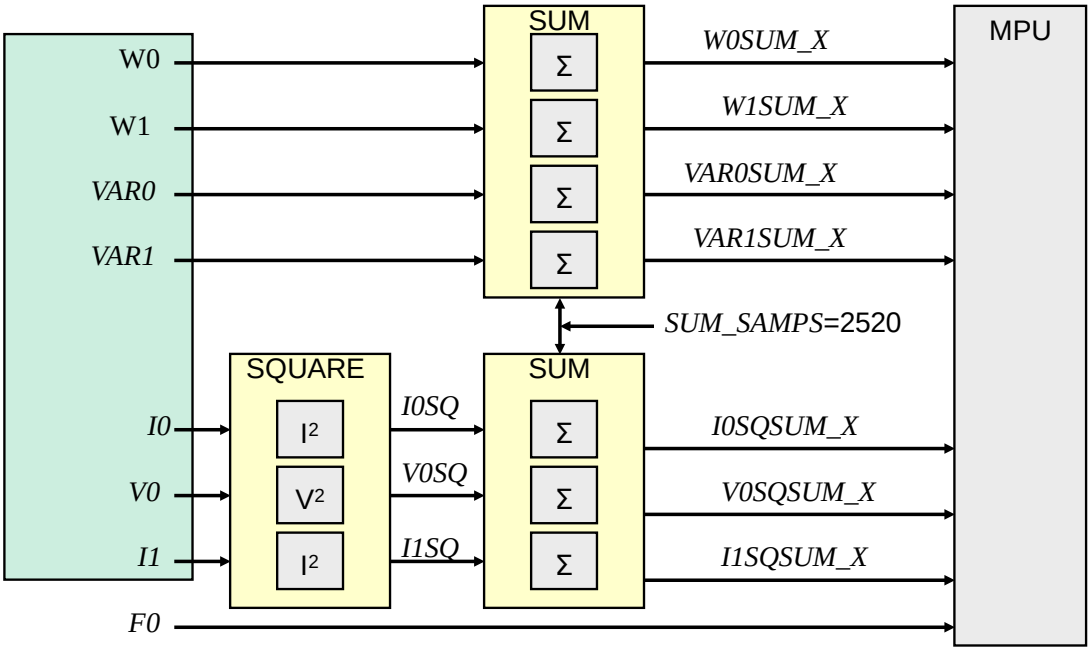

Figure 46: CE Data Flow: Squaring and Summation Stages

6 Electrical Specifications

This section provides the electrical specifications for the 71M654x. Please refer to the 71M6xxx Data Sheet for the 71M6x01 electrical specifications, pin-out, and package mechanical data.

The devices are 100% production tested at room temperature, and performance over the full temperature range is guaranteed by design.

6.1 Absolute Maximum Ratings

Table 93 shows the absolute maximum ratings for the device. Stresses beyond Absolute Maximum Ratings may cause permanent damage to the device. These are stress ratings only and functional operation at these or any other conditions beyond those indicated under recommended operating conditions (see 6.3 Recommended Operating Conditions) is not implied. Exposure to absolute-maximum-rated conditions for extended periods may affect device reliability. All voltages are with respect to GNDA.

Table 93: Absolute Maximum Ratings

Voltage and Current	
Supplies and Ground Pins	
V3P3SYS, V3P3A	–0.5 V to 4.6 V
VBAT, VBAT_RTC	-0.5 V to 4.6 V
GNDD	-0.1 V to +0.1 V
Analog Output Pins	
VREF	-10 mA to +10 mA, -0.5 V to V3P3A+0.5 V
VDD	-10 mA to 10 mA, -0.5 to 3.0 V
V3P3D	-10 mA to 10 mA, -0.5 V to 4.6 V
VLCD	-10 mA to 10 mA, -0.5 V to 6 V
Analog Input Pins	
IAP-IAN, VA, IBP-IBN, VB† († 71M6542F/G only)	-10 mA to +10 mA -0.5 V to V3P3A+0.5 V
XIN, XOUT	-10 mA to +10 mA -0.5 V to 3.0 V
SEG and SEGDIO Pins	
Configured as SEG or COM drivers	-1 mA to 1 mA, -0.5 V to VLCD+0.5 V
Configured as Digital Inputs	-10 mA to 10 mA, -0.5 V to 6 V
Configured as Digital Outputs	-10 mA to 10 mA, -0.5 V to V3P3D+0.5 V
Digital Pins	
Inputs (PB, RESET, RX, ICE_E, TEST)	-10 mA to 10 mA, -0.5 to 6 V
Outputs (TX)	-10 mA to 10 mA, -0.5 V to V3P3D+0.5 V

Temperature and ESD Stress	
Operating junction temperature (peak, 100ms)	140 °C
Operating junction temperature (continuous)	125 °C
Storage temperature	–45 °C to +165 °C
Solder temperature – 10 second duration	+250 °C
ESD stress on all pins	±4 kV

6.2 Recommended External Components

Table 94: Recommended External Components

Name	From	To	Function	Value	Unit
C1	V3P3A	GNDA	Bypass capacitor for 3.3 V supply	≥0.1 ±20%	µF
C2	V3P3D	GNDD	Bypass capacitor for 3.3 V output	0.1 ±20%	µF
CSYS	V3P3SYS	GNDD	Bypass capacitor for V3P3SYS	≥1.0 ±30%	µF
CVDD	VDD	GNDD	Bypass capacitor for VDD	0.1 ±20%	µF
CVLCD	VLCD	GNDD	Bypass capacitor for VLCD pin (when charge pump is used)	≥0.1 ±20%	µF
XTAL	XIN	XOUT	32.768 kHz crystal – electrically similar to ECS .327-12.5-17X, Vishay XT26T or Suntsu SCP6–32.768kHz TR (load capacitance 12.5 pF).	32.768	kHz
CXS	XIN	GNDA	Load capacitor values for crystal depend on crystal specifications and board parasitics. Nominal values are based on 4 pF board capacitance and include an allowance for chip capacitance.	15 ±10%	pF
CXL	XOUT	GNDA		10 ±10%	pF

6.3 Recommended Operating Conditions

Unless otherwise specified, all parameters listed in 6.4 Performance Specifications and 6.5 Timing Specifications are valid over the Recommended Operating Conditions provided in Table 95 below.

Table 95: Recommended Operating Conditions

Parameter	Condition	Min	Typ	Max	Unit
V3P3SYS and V3P3A Supply Voltage for precision metering operation (MSN mode). Voltages at VBAT and VBAT_RTC need not be present.	VBAT=0 V to 3.8 V VBAT_RTC =0 V to 3.8 V	3.0		3.6	V
VBAT Voltage (BRN mode). V3P3SYS is below the 2.8 V comparator threshold. Either V3P3SYS or VBAT_RTC must be high enough to power the RTC module.	V3P3SYS < 2.8 V and Max (VBAT_RTC, V3P3SYS) > 2.0 V	2.5		3.8	V
VBAT_RTC Voltage. VBAT_RTC is not needed to support the RTC and non-volatile memory unless V3P3SYS < 2.0 V	V3P3SYS<2.0 V	2.0		3.8	V
Operating Temperature		-40		+85	ºC

Notes:
1. GNDA and GNDD must be connected together.
2. V3P3SYS and V3P3A must be connected together.

6.4 Performance Specifications

6.4.1 Input Logic Levels

Table 96: Input Logic Levels

Parameter	Condition	Min	Typ	Max	Unit
Digital high-level input voltage[1], V_{IH}		2			V
Digital low-level input voltage[1], V_{IL}				0.8	V
Input pullup current, I_{IL}					
E_RXTX, E_RST, E_TCLK	VIN=0 V,	10		100	µA
OPT_RX, OPT_TX	ICE_E=3.3 V	10		100	µA
SPI_CSZ (SEGDIO36)		10		10	µΩ
Other digital inputs		-1	0	1	µA
Input pull down current, I_{IH}	VIN=V3P3D				
ICE_E, RESET, TEST		10		100	µA
Other digital inputs		-1	0	1	µA

Note:
1. In battery powered modes, digital inputs should be below 0.1 V or above VBAT – 0.1 V to minimize battery current.

6.4.2 Output Logic Levels

Table 97: Output Logic Levels

Parameter	Condition	Min	Typ	Max	Unit
Digital high-level output voltage V_{OH}	I_{LOAD} = 1 mA	V3P3D–0.4			V
	I_{LOAD} = 15 mA (see notes 1, 2)	V3P3D-0.6			V
Digital low-level output voltage V_{OL}	I_{LOAD} = 1 mA	0		0.4	V
	I_{LOAD} = 15 mA (see note 1)	0		0.8	V

Note:
1. Guaranteed by design, not production tested.
2. **Caution:** The sum of all pull up currents must be compatible with the on-resistance of the internal V3P3D switch. See 6.4.6 V3P3D Switch on page 144.

6.4.3 Battery Monitor

Table 98: Battery Monitor Performance Specifications (*TEMP_BAT*= 1)

Parameter	Condition	Min	Typ	Max	Unit
BV: Battery Voltage (definition)	MSN mode, *TEMP_PWR* = 1 BRN mode, *TEMP_PWR*=*TEMP_BSEL*	$BV = 3.3V + (BSENSE - 142) \cdot 0.0246V + STEMP \cdot 297\mu V$ $BV = 3.291V + (BSENSE - 142) \cdot 0.0255V + STEMP \cdot 328\mu V$			V
Measurement Error $100 \cdot \left(\frac{BV}{VBAT} - 1 \right)$	VBAT = 2.0 V 2.5 V 3.0 V 4.0 V	-7.5 -5 -3 -3		7.5 5 3 5	%
Input impedance in continuous measurement, MSN mode. V(VBAT_RTC)/I(VBAT_RTC)	V3P3 = 3.3 V, *TEMP_BSEL* = 0, *TEMP_PER* = 111, VBAT_RTC = 3.6 V,	1			MΩ
Load applied with *BCURR* IBAT(*BCURR*=1) - IBAT(*BCURR*=0)	V3P3 = 3.3 V	50	100	140	µA

6.4.4 Temperature Monitor

Table 99. Temperature Monitor

Parameter	Condition	Min	Typ	Max	Unit
Temperature Measurement Equation	In MSN, *TEMP_PWR*=1: $\text{Temp} = 0.325 \cdot \text{STEMP} + 22$ In BRN, *TEMP_PWR* = *TEMP_BSEL*: $Temp = 0.325 \cdot STEMP + 0.00218 \cdot BSENSE^2 - 0.609 \cdot BSENSE + 64.4$				°C
Temperature Error	T_A=+22°C	-2		+2	°C
VBAT_RTC charge per measurement	*TEMP_BSEL* = 0, *TEMP_PWR*=0, SLP Mode, VBAT_RTC = 3.6 V		16		µC
Duration of temperature measurement after setting *TEMP_START* (see note 1)	*TEMP_PWR* = 0, *TEMP_PER* = 7, SLP Mode, VBAT_RTC = 3.6 V Force V3P3D = 1.0 V		15	60	ms

Notes:

1. Guaranteed by design; not production tested.

6.4.5 Supply Current

The supply currents provided in Table 100 below include only the current consumed by the 71M654x. Refer to the *71M6xxx Data Sheet* for additional current required when using a 71M6x01 remote sensor.

Table 100: Supply Current Performance Specifications

Parameter	Condition	Min	Typ	Max	Unit
I1: **V3P3A + V3P3SYS** current, Half-Speed (*ADC_DIV*=1) (see note 1)	**Single-phase: 2 Currents, 1 Voltage** **V3P3A = V3P3SYS** = 3.3 V, *MPU_DIV [2:0]*= 3 (614 kHz MPU clock), No Flash memory write, *RTM_E*=0, *PRE_E*=0, *CE_E*=1, *ADC_E*=1, *ADC_DIV*=1, *MUX_DIV[3:0]*=3, *FIR_LEN[1:0]*=1, *PLL_FAST*=1		5.5	6.7	mA
I1a: **V3P3A + V3P3SYS** current, Half-Speed (*ADC_DIV*=1) (see note 1)	Same as I1, except *PLL_FAST*=0		2.6	3.5	mA
I1b: **V3P3A + V3P3SYS** current, Half-Speed (*ADC_DIV*=1) (see note 1)	Same as I1, except *PRE_E* = 1		5.7	6.9	mA
I1c: **V3P3A + V3P3SYS** current, Half-Speed (*ADC_DIV*=1) (see note 1)	Same as I1, except *PLL_FAST* = 0 and *PRE_E* = 1		2.6	3.6	mA
I2: **V3P3A + V3P3SYS** dynamic current	Same as I1, except with variation of *MPU_DIV[2:0]*. $\frac{I_{MPU_DIV=0} - I_{MPU_DIV=3}}{4.3}$		0.4	0.6	mA/ MHz
VBAT current **I3:** MSN Mode **I4:** BRN Mode **I5:** LCD Mode (ext. VLCD) **I6:** LCD Mode (boost, DAC)[Note 1] **I7:** LCD Mode (DAC)[Note 1] **I8:** LCD Mode (VBAT)[Note 1] **I9:** SLP Mode	 *CE_E*=0 *LCD_VMODE[1:0]*=3, also see note 2 *LCD_VMODE[1:0]*=2, also see note 3 *LCD_VMODE[1:0]*=1, also see note 3 *LCD_VMODE[1:0]*=0, also see note 3 SLP Mode	-300 -300	 0 2.4 0.4 24 3.0 1.1 0	 300 3.2 108 36 11 3.4 +300	 nA mA nA µA µA µA nA
VBAT_RTC current **I10:** MSN **I11:** BRN **I12:** LCD Mode **I13:** SLP Mode **I14:** SLP Mode (see note 1)	 *LCD_VMODE[1:0]*=2, also see note 2 $T_A \leq 25$ °C $T_A = 85$ °C	-300	 0 240 1.8 0.7 1.5	 300 320 4.1 1.7 3.2	 nA nA µA µA µA
I15: **V3P3A + V3P3SYS** current, Write Flash with ICE	Same as I1, except write Flash at maximum rate, *CE_E*=0, *ADC_E*=0.		7.1	8.7	mA

Notes:

1. Guaranteed by design; not production tested.
2. *LCD_DAC[4:0]*=5 (2.9V), *LCD_CLK[1:0]*=2, *LCD_MODE[2:0]*=6, all *LCD_MAPn* bits = 1, *LCD_BLANK*=0, *LCD_ON*=1.
3. *LCD_DAC[4:0]*=5 (2.9V), *LCD_CLK[1:0]*=2, *LCD_MODE[2:0]*=6, all *LCD_MAPn* bits = 0.

6.4.6 V3P3D Switch

Table 101: V3P3D Switch Performance Specifications

Parameter	Condition	Min	Typ	Max	Unit
On resistance – V3P3SYS to V3P3D	$\lvert I_{V3P3D} \rvert \leq 1$ mA			10	Ω
On resistance – VBAT to V3P3D	$\lvert I_{V3P3D} \rvert \leq 1$ mA, VBAT>2.5V			10	Ω
V3P3D I_{OH}, MSN	V3P3SYS = 3V V3P3D = 2.9V	10			mA
V3P3D I_{OH}, BRN	VBAT = 2.6V V3P3D = 2.5V	10			mA

6.4.7 Internal Power Fault Comparators

Table 102. Internal Power Fault Comparator Specifications

Parameter	Condition	Min	Typ	Max	Unit
Overall response time	100mV overdrive, falling 100mV overdrive, rising	20		200 200	µs µs
Falling Threshold 3.0 V Comparator 2.8 V Comparator Difference 3.0V and 2.8V Comparators	V3P3 falling	 2.83 2.75 50	 2.93 2.81 136	 3.03 2.87 220	 V V mV
Falling Threshold 2.25 V Comparator 2.0 V Comparator VDD (@VBAT=3.0V) – 2.25V Comparator Difference 2.25V and 2.0V Comparators	VDD falling	 2.2 1.90 0.25 0.15	 2.25 2.00 0.35 0.25	 2.5 2.20 0.45 0.35	 V V V V
Hysteresis, (Rising Threshold - Falling Threshold) 3.0 V Comparator 2.8 V Comparator 2.25 V Comparator 2.0 V Comparator	T_A = 22 °C	 22 25 10 10	 45 42 33 28	 65 60 60 60	 mV mV mV mV

6.4.8 2.5 V Voltage Regulator – System Power

Table 103: 2.5 V Voltage Regulator Performance Specifications

Parameter	Condition	Min	Typ	Max	Unit
V2P5	V3P3 = 3.0 V - 3.8 V I_{LOAD} = 0 mA	2.55	2.65	2.75	V
V2P5 load regulation	VBAT = 3.3 V , V3P3 = 0 V I_{LOAD} = 0 mA to 1 mA			40	mV
Voltage overhead V3P3SYS-V2P5	I_{LOAD} = 5 mA, Reduce V3P3D until V2P5 drops 200 mV			440	mV

6.4.9 2.5 V Voltage Regulator – Battery Power

Unless otherwise specified, V3P3SYS = V3P3A = 0, PB=GND (BRN).

Table 104: Low-Power Voltage Regulator Performance Specifications

Parameter	Condition	Min	Typ	Max	Unit
V2P5	VBAT = 3.0 V - 3.8 V, V3P3 = 0 V, I_{LOAD} = 0 mA	2.55	2.65	2.75	V
V2P5 load regulation	VBAT = 3.3 V, V3P3 = 0 V, I_{LOAD} = 0 mA to 1 mA			40	mV
Voltage Overhead 2V − VBAT-VDD	I_{LOAD} = 0ma, VBAT = 2.0 V, V3P3 = 0 V.			200	mV

6.4.10 Crystal Oscillator

Measurement conditions: Crystal disconnected, test load of 200 pF/100 kΩ between XOUT and GNDD.

Table 105: Crystal Oscillator Performance Specifications

Parameter	Condition	Min	Typ	Max	Unit
Maximum Output Power to Crystal	Crystal connected, see note 1			1	µW
XIN to XOUT Capacitance (see note 1)				3	pF
Capacitance change on XOUT	*RTCA_ADJ* = 7F to 0, Bias voltage = unbiased Vpp = 0.1 V		15		pF

Notes:
1. Guaranteed by design; not production tested.

6.4.11 Phase-Locked Loop (PLL)

Table 106: PLL Performance Specifications

Parameter	Condition	Min	Typ	Max	Unit
PLL Power up Settling Time (see note 1)	*PLL_FAST* = 0, V3P3 = 0 V to 3.3 V step, measured from first edge of MCK			5	ms
PLL_FAST settling time PLL_FAST rise (see note 1) PLL_FAST fall (see note 1)	V3P3 = 0 V, VBAT = 3.8 V to 2.0 V			 5 5	 ms ms
PLL SLP to MSN Settling Time (see note 2)	*PLL_FAST* = 0			5	ms
PLL power up overshoot (see note 1)	*PLL_FAST* = 0			2.5	MHz

Notes:
1. Guaranteed by design; not production tested.

6.4.12 LCD Drivers

Table 107: LCD Driver Performance Specifications

Parameter	Condition	Min	Typ	Max	Unit
VLCD Current (see Notes 1 to 4)	VLCD=3.3, all LCD map bits=0 VLCD=5.0, all LCD map bits=0			2 3	uA uA

Notes:

1. These specifications apply to all COM and SEG pins.
2. VLCD = 2.5 V to 5 V.
3. *LCD_VMODE*=3, *LCD_ON*=1, *LCD_BLANK*=0, *LCD_MODE*=6, *LCD_CLK*=2.
4. Output load is 74 pF per SEG and COM pin.

6.4.13 VLCD Generator

Table 108: LCD Driver Performance Specifications[1]

Parameter	Condition	Min	Typ	Max	Unit
VSYS to VLCD switch impedance	V3P3 = 3.3 V, RVLCD=removed, *LCD_BAT*=0, *LCD_VMODE[1:0]*=0, ΔILCD=10 µA			750	Ω
VBAT to VLCD switch impedance	V3P3 = 0 V, VBAT = 2.5 V, RVLCD =removed, *LCD_BAT* =1, *LCD_VMODE[1:0]*=0, ΔILCD=10 µA			700	Ω
LCD Boost Frequency	*LCD_VMODE[1:0]* = 2, RVLCD = removed, CVLCD = removed *PLL_FAST*=1 *PLL_FAST*=0		 820 786		 kHz kHz
VLCD IOH current (VLCD(0)-VLCD(IOH)<0.25)	*LCD_VMODE[1:0]* = 2, *LCD_CLK[1:0]* = 2, RVLCD = removed, V3P3 = 3.3V, *LCD_DAC[4:0]* = 1F	10			µA
From *LCDADJ0* and *LCDADJ12* fuses: $$LCDADJ(LCD_DAC) = 5mV\left[LCDADJ0 + \frac{LCDADJ12 - LCDADJ0}{12} LCD_DAC\right]$$ $$VLCD_{NOM}(LCD_DAC) = 2.65 + 2.65\frac{LCD_DAC}{31} + LCDADJ(LCD_DAC)$$ The above equations describe the nominal value of VLCD for a specific LCD_DAC value. The specifications below list the maximum deviation between actual VLCD and VLCDnom. Note that when VCC and boost are insufficient, the LCD DAC will not reach its target value and a large negative error will occur.					
LCD_DAC Error. VLCD-VLCDnom (see note 2) Full Scale, with Boost V3P3 =3.6 V V3P3 =3.0 V VBAT=4.0 V, V3P3=0, BRN Mode VBAT=2.5 V, V3P3=0, BRN Mode	*LCD_VMODE[1:0]* = 2, *LCD_DAC[4:0]* = 1F, *LCD_CLK[1:0]*=2, *LCD_MODE[2:0]*=6	 -0.15 -0.4 -0.15 -1.3		 0.15 0.15 0.15	 V V V V
LCD_DAC Error. VLCD-VLCDnom DAC=12, with Boost V3P3 = 3.6 V V3P3 = 3.0 V VBAT = 2.5 V, V3P3 = 0 V, BRN Mode	*LCD_VMODE[1:0]* = 2, *LCD_DAC[4:0]* = C, *LCD_CLK[1:0]*=2, *LCD_MODE[2:0]*=6	 -0.15 -0.15 -0.15		 0.15 0.15 0.15	 V V V
LCD_DAC Error. VLCD-VLCDnom Zero Scale, with Boost V3P3 = 3.6 V V3P3 = 3.0 V VBAT = 4.0 V, V3P3 = 0 V, BRN Mode (see note 2) VBAT = 2.5 V, V3P3 = 0 V, BRN Mode	*LCD_VMODE[1:0]* = 2, *LCD_DAC[4:0]* =0, *LCD_CLK[1:0]*=2, *LCD_MODE[2:0]*=6	 -0.15 -0.15 -0.15 -0.15		 0.15 0.15 0.15 0.15	 V V V V
LCD_DAC Error. VLCD-VLCDnom Full Scale, no Boost V3P3 = 3.6 V (see note 2) V3P3 = 3.0 V (see note 2) VBAT = 4.0 V, V3P3 = 0 V, BRN Mode VBAT = 2.5 V, V3P3 = 0 V, BRN Mode	*LCD_VMODE[1:0]* = 1, *LCD_DAC[4:0]* = 1F, *LCD_CLK[1:0]*=2, *LCD_MODE[2:0]*=6	 -2.1 -2.8 -1.8 -3.2			 V V V V

Parameter	Condition	Min	Typ	Max	Unit
LCD_DAC Error. VLCD-VLCDnom DAC=12, no Boost V3P3 = 3.6 V V3P3 = 3.0 V VBAT = 4.0 V, V3P3 = 0 V, BRN Mode VBAT = 2.5 V, V3P3 = 0 V, BRN Mode	*LCD_VMODE[1:0]* = 1, *LCD_DAC[4:0]* = C, *LCD_CLK[1:0]*=2, *LCD_MODE[2:0]*=6	 -0.5 -1.1 -0.15[2] -1.5[2]		 0.15[2]	 V V V V
LCD_DAC Error. VLCD-VLCDnom Zero Scale, no Boost V3P3 = 3.6 V V3P3 = 3.0 V VBAT = 4.0 V, V3P3 = 0 V, BRN Mode VBAT = 2.5 V, V3P3 = 0 V, BRN Mode	*LCD_VMODE[1:0]* = 1, *LCD_DAC[4:0]* = 0, *LCD_CLK[1:0]*=2, *LCD_MODE[2:0]*=6	 -0.15 -0.15 -0.15 -0.45		 0.15 0.15 0.15 0.15	 V V V V
LCD_DAC Error. VLCD-VLCDnom Full Scale, with Boost, LCD mode VBAT = 4.0 V, V3P3 = 0 V VBAT = 2.5 V, V3P3 = 0 V	*LCD_VMODE[1:0]* = 2, *LCD_DAC[4:0]* = 1F, *LCD_CLK[1:0]*=2, *LCD_MODE[2:0]*=6	 -0.15 -1.3		 0.15	 V V

Notes:

1. The following test conditions also apply to all parameters provided in this table: bypass capacitor CVLCD ≥ 0.1 µF, test load RVLCD = 500 kΩ, no display, all SEGDIO pins configured as DIO.
2. Guaranteed by design; not production tested.

6.4.14 VREF

Table 109 shows the performance specifications for the ADC reference voltage (VREF).

Table 109: VREF Performance Specifications

Parameter	Condition	Min	Typ	Max	Unit
VREF output voltage, VREF(22)	T_A = 22 ºC	1.193	1.195	1.197	V
VREF output voltage, VREF(22)	*PLL_FAST*=0		1.195		V
VREF output impedance	*VREF_CAL* = 1, I_{LOAD} = 10 µA, -10 µA			3.2	kΩ
VREF power supply sensitivity ΔVREF / ΔV3P3A	V3P3A = 3.0 to 3.6 V	-1.5		1.5	mV/V
VREF input impedance	*VREF_DIS* = 1, VREF = 1.3 V to 1.7 V	100			kΩ
VREF chop step, trimmed	VREF(CHOP=01) − VREF(CHOP=10)	-10	0	10	mV
VNOM definition (see note 2)	$VNOM(T) = VREF(22) + (T-22)TC1 + (T-22)^2 TC2$				V
VNOM temperature coefficients: TC1 = TC2 =	$275 - 4.95 \cdot TRIMT$ $-0.557 - 0.00028 \cdot TRIMT$				µV/°C µV/°C^2
VREF(T) deviation from VNOM(T) (see note 1): $\frac{VREF(T) - VNOM(T)}{VNOM(T)} \frac{10^6}{62}$		-40		+40	ppm/°C
VREF aging			±25		ppm/ year

Notes:

1. Guaranteed by design; not production tested.
2. This relationship describes the nominal behavior of VREF at different temperatures, as governed by a second order polynomial of 1st and 2nd order coefficients TC1 and TC2.
3. For the parameters in this table, unless otherwise specified, *VREF_DIS* = 0, *PLL_FAST*=1.

6.4.15 ADC Converter

Table 110. ADC Converter Performance Specifications

Parameter	Condition	Min	Typ	Max	Unit
Recommended Input Range (Vin - V3P3A)		-250		250	mV peak
Voltage to Current Crosstalk $\frac{10^6 * Vcrosstalk}{Vin}\cos(\angle Vin - \angle Vcrosstalk)$ (see note 1)	Vin = 200 mV peak, 65 Hz, on VADC10 (VA) or VADC9 (VB)† †71M6542F/G only. $Vcrosstalk$ = largest measurement on IAP-IAN or IBP-IBN	-10		10	µV/V
Input Impedance, no pre-amp	Vin=65 Hz	40		90	kΩ
ADC Gain Error vs %Power Supply Variation $\frac{10^6\ \Delta Nout_{PK}\ 357nV/V_{IN}}{100\Delta V3P3A/3.3}$	Vin=200 mV pk, 65 Hz V3P3A=3.0 V, 3.6 V			50	ppm / %
Input Offset IADC0=IADC1=V3P3A IADC0=V3P3A	 $DIFF0_E$=1, PRE_E=0 $DIFF0_E$=0, PRE_E=0	 -10 -10		 10 10	 mV mV
THD @ 250mVpk (see table below)	V_{IN} = 65Hz, 250mVpk, 64kpts FFT, Blackman Harris Window.		(see table below)	(see table below)	dB
THD @ 20mVpk (see table below)	V_{IN} = 65Hz, 20mVpk, 64kpts FFT, Blackman Harris Window.		(see table below)		dB
LSB Size: (see table below)	Vin=65Hz, 20mVpk, 64kpts FFT, Blackman-Harris window		(see table below)		nV
Digital Full-Scale: (see table below)			A: ±91125 B: ±778688 C: ±103823 D: ±884736 E: ±2097152 F: ±91125 G: ±103823 H: ±884736 J: ±2097152		LSB

Name	FIR_LEN	ADC_DIV	PLL_FAST	MUX_DIV
A	0	0	0	3
B	1	0	0	2
C	0	0	1	11
D	1	0	1	6
E	2	0	1	4
F	0	1	0	2
G	0	1	1	6
H	1	1	1	3
J	2	1	1	2

A		-75
B	-82	-75
C		-75
D	-84	-75
E		-75
F	-83	-75
G		-75
H	-86	-75
J		-75

A	-85
B	-91
C	-85
D	-91
E	-93
F	-85
G	-85
H	-91
J	-93

A	3470
B	406
C	3040
D	357
E	151
F	3470
G	3040
H	357
J	151

Notes:
1. Guaranteed by design; not production tested.
2. Unless stated otherwise, the following test conditions apply to all the parameters provided in this table: *FIR_LEN[1:0]*=1, *VREF_DIS*=0, *PLL_FAST*=1, *ADC_DIV*=0, *MUX_DIV*=6, LSB values do not include the 9-bit left shift at CE input.

6.4.16 Pre-Amplifier for IAP-IAN

Table 111: Pre-Amplifier Performance Specifications

PARAMETER	CONDITION	MIN	TYP	MAX	UNIT
Differential Gain Vin=30mV differential Vin=15mV differential (see note 1)	T_A= +25ºC, V3P3=3.3 V, *PRE_E*=1, *FIR_LEN*=2, *DIFF0_E*=1, 2520Hz sample rate	 7.8 7.8	 7.92 7.92	 8.0 8.0	 V/V V/V
Gain Variation vs V3P3 Vin=30mV differential (see note 1)	V3P3 = 2.97 V, 3.63 V	-100		100	ppm/%
Gain Variation vs Temp Vin=30mV differential (see note 1)	T_A = -40ºC, 85ºC	10	-25	-80	ppm/C
Phase Shift, Vin=30mV differential (see note 1)	T_A=25ºC, V3P3=3.3 V	-6		6	mº
Preamp input current IADC0 IADC1	*PRE_E*=1, *FIR_LEN*=2, *DIFF0_E*=1 2520Hz sample rate, IADC0=IADC1=V3P3	 4 4	 9 9	 16 16	 uA uA
Preamp+ADC THD Vin=30mV differential Vin=15mV differential	T_A=25ºC, V3P3=3.3 V, *PRE_E*=1, *FIR_LEN*=2, *DIFF0_E*=1, 2520Hz sample rate.		 -82 -86		 dB dB
Preamp Offset IADC0=IADC1=V3P3+30mV IADC0=IADC1= V3P3+15mV IADC0=IADC1= V3P3 IADC0=IADC1= V3P3-15mV IADC0=IADC1= V3P3-30mV	T_A=25ºC, V3P3=3.3 V, *PRE_E*=1, *FIR_LEN*=2, *DIFF0_E*=1, 2520Hz sample rate		 -0.63 -0.57 -0.56 -0.56 -0.55		 mV mV mV mV mV

Notes:
1. Guaranteed by design; not production tested.

6.5 Timing Specifications

6.5.1 Flash Memory

Table 112: Flash Memory Timing Specifications

Parameter	Condition	Min	Typ	Max	Unit
Flash write cycles	-40 °C to +85 °C	20,000			Cycles
Flash data retention	25 °C 85 °C	100 10			Years
Flash byte writes between page or mass erase operations				2	Cycles
Write Time per Byte				21	µs
Page Erase (1024 bytes)				21	ms
Mass Erase				21	Ms

6.5.2 SPI Slave

Table 113. SPI Slave Timing Specifications

Parameter	Condition	Min	Typ	Max	Unit
SPI Setup Time	SPI_DI to SPI_CK rise	10			ns
SPI Hold Time	SPI_CK rise to SPI_DI	10			ns
SPI Output Delay	SPI_CK fall to SPI_D0			40	ns
SPI Recovery Time	SPI_CSZ fall to SPI_CK	10			ns
SPI Removal Time	SPI_CK to SPI_CSZ rise	15			ns
SPI Clock High		40			ns
SPI Clock Low		40			ns
SPI Clock Freq	SPI Freq/MPU Freq			2.0	MHz/MHz
SPI Transaction Space	SPI_CSZ rise to SPI_CSZ fall	4.5			MPU Cycles

6.5.3 EEPROM Interface

Table 114: EEPROM Interface Timing

Parameter	Condition	Min	Typ	Max	Unit
Write Clock frequency (I^2C)	CKMPU = 4.9 MHz, Using interrupts		310		kHz
	CKMPU = 4.9 MHz, bit-banging DIO2/3 *PLL_FAST* = 0		100		kHz
Write Clock frequency (3-wire)	CKMPU = 4.9 MHz *PLL_FAST* = 0 *PLL_FAST* = 1		160 500		kHz

6.5.4 RESET Pin

Table 115: RESET Pin Timing

Parameter	Condition	Min	Typ	Max	Unit
Reset pulse width		5			µs
Reset pulse fall time (see note 1)				1	µs
Notes: 1. Guaranteed by design; not production tested.					

6.5.5 RTC

Table 116: RTC Range for Date

Parameter	Condition	Min	Typ	Max	Unit
Range for date		2000	-	2255	Year

6.6 Package Outline Drawings

6.6.1 64-Pin LQFP Outline Package Drawing

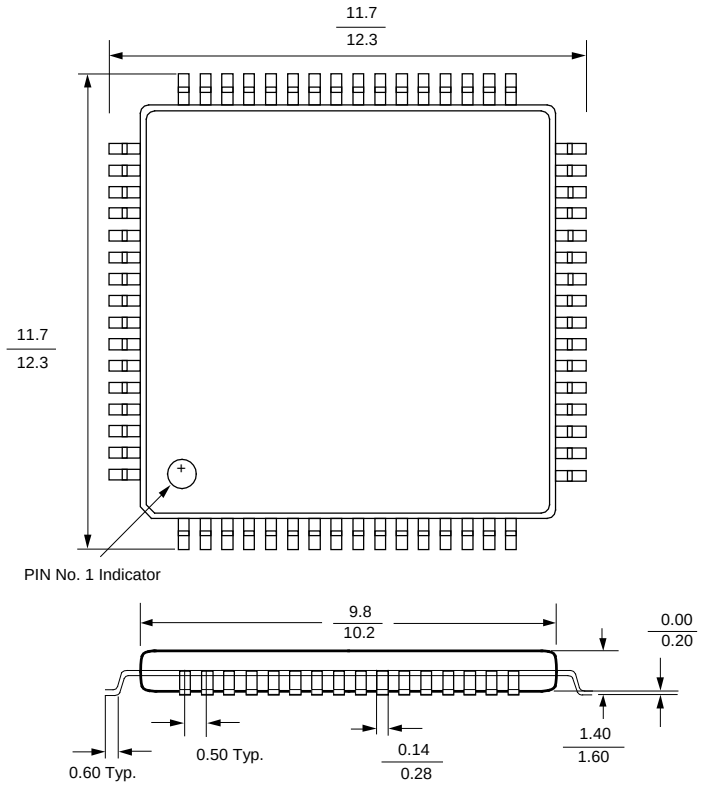

Figure 47: 64-pin LQFP Package Outline

6.6.2 100-Pin LQFP Package Outline Drawing

Controlling dimensions are in mm.

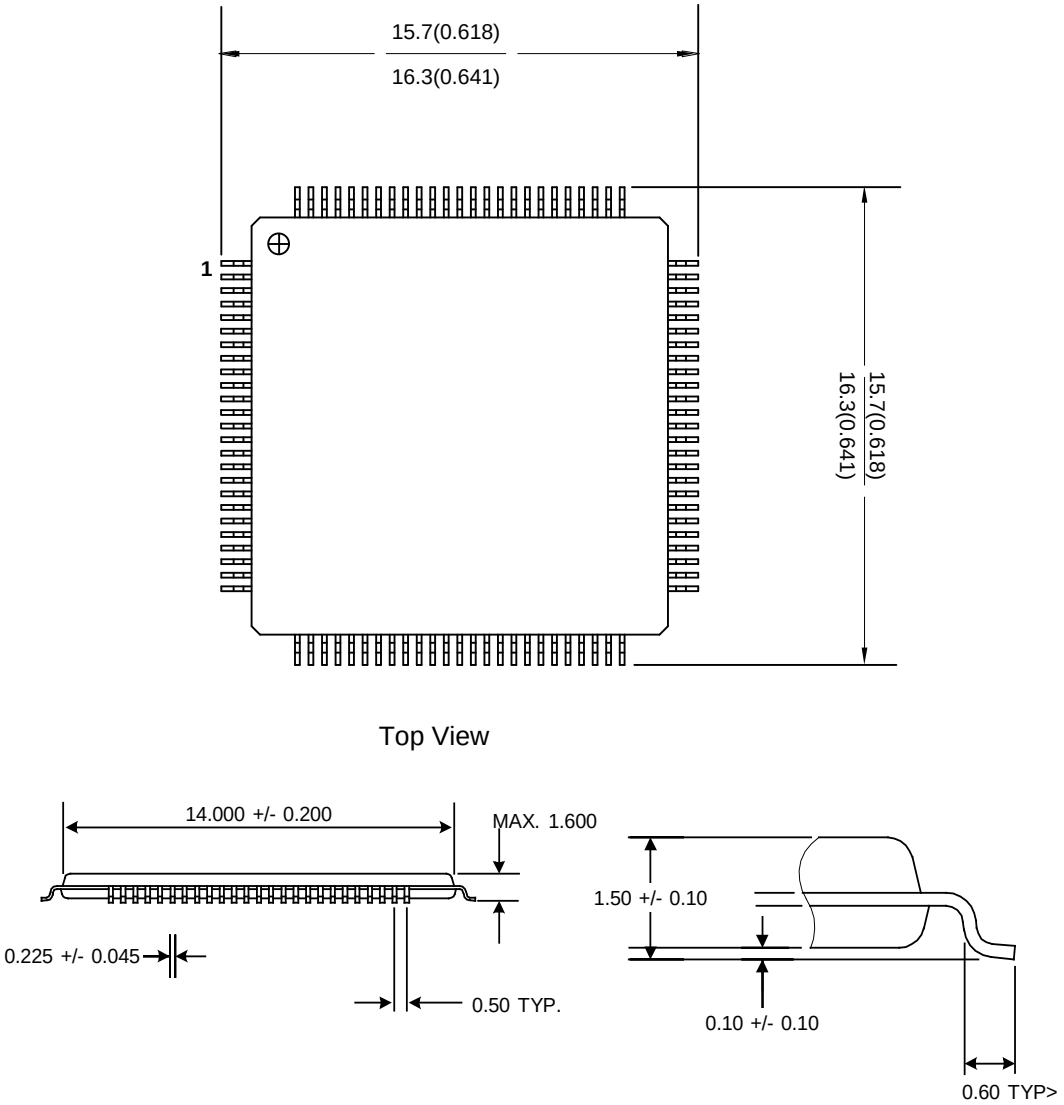

Figure 48: 100-pin LQFP Package Outline

6.7 Package Markings

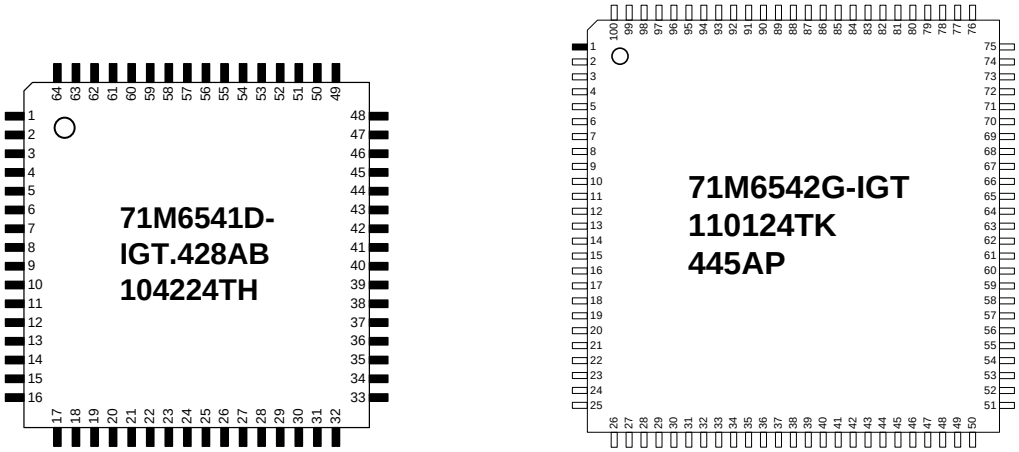

Figure 49. Package Markings (Examples)

Figure 49 provides an example of the package markings for the 64-pin and 100-pin packages. Package markings comprise three lines of text and are as described in Table 117 and Table 118 below.

Table 117. 71M6541 Package Markings

Line No.	Markings	Description
1	71M6541D-	Part number ('IGT' wraps to the next line) Refer to Table 122.
2	IGT.428AB	The five characters to the right of the dot (i.e., 428AB) are the lot code.
3	104224TH	The first four digits to the left are the year and week of manufacture as YYWW. In this example, the date code is 1042 which represents year 2010, week 42. The last four characters (i.e., 24TH) are reserved for Maxim internal use only.

Table 118. 71M6542 Package Markings

Line No.	Markings	Description
1	71M6542G-IGT	Part number. Refer to Table 122.
2	110124TK	The first four digits to the left are the year and week of manufacture as YYWW. In this example, the date code is 1101 which represents year 2011, week 1. The last four characters (i.e., 24TK) are reserved for Maxim internal use only.
3	445AP	A five character lot code.

6.8 Pinout Diagrams

6.8.1 71M6541D/F/G LQFP-64 Package Pinout

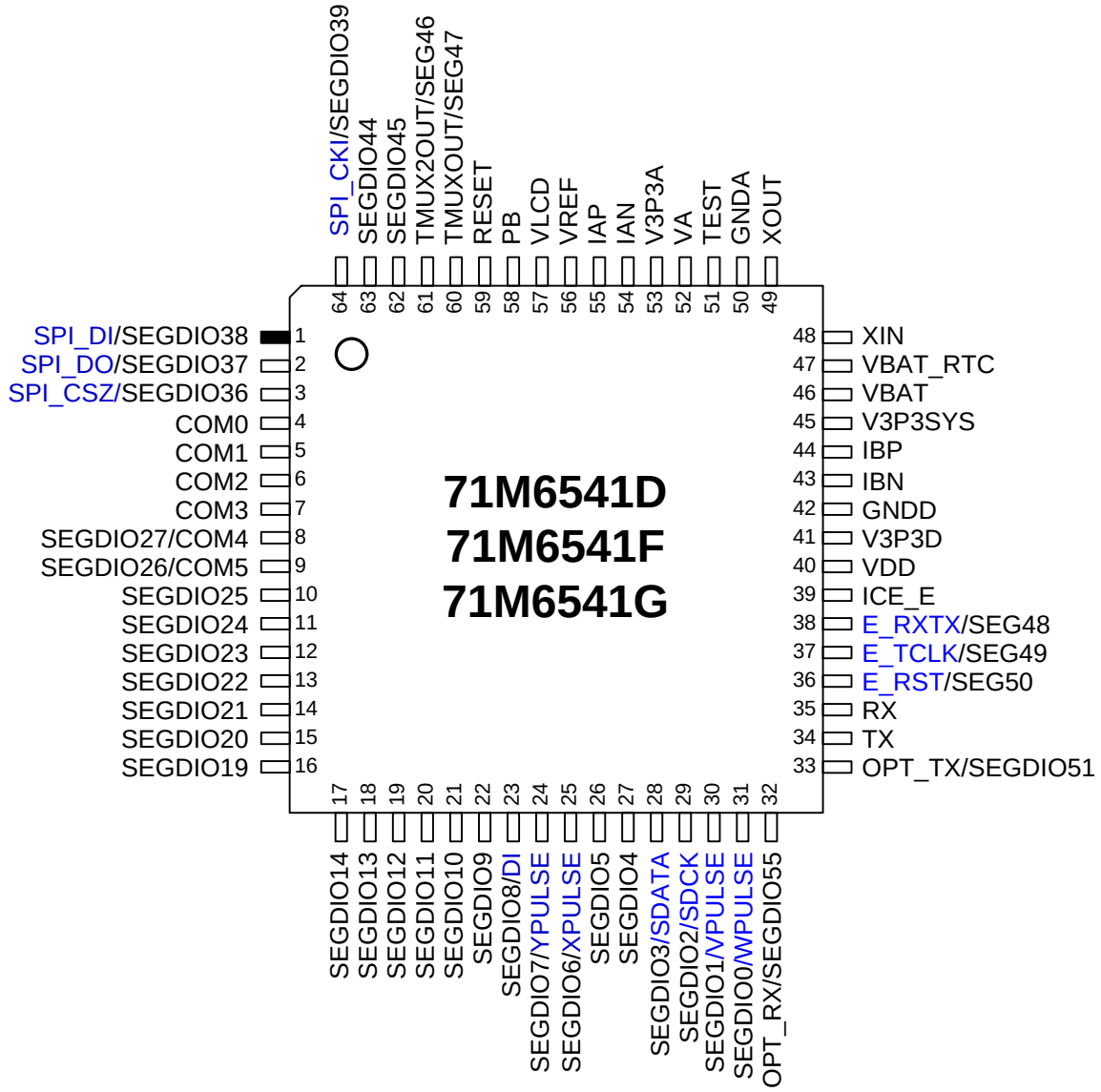

Figure 50: Pinout for the 71M6541D/F/G (LQFP-64 Package)

6.8.2 71M6542F/G LQFP-100 Package Pinout

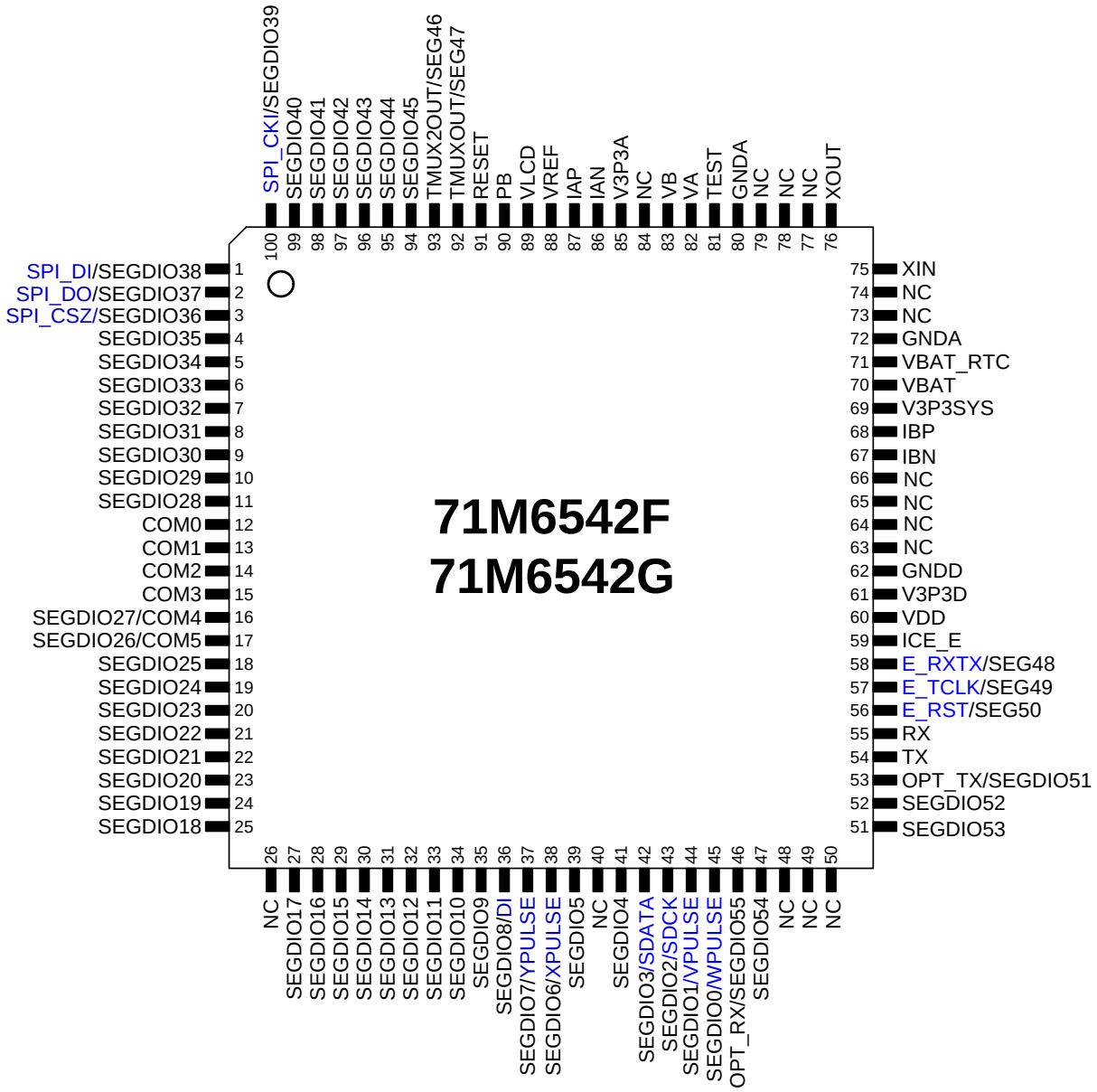

Figure 51: Pinout for the 71M6542F/G (LQFP-100 Package)

6.9 Pin Descriptions

6.9.1 Power and Ground Pins

Pin types: P = Power, O = Output, I = Input, I/O = Input/Output.
The circuit number denotes the equivalent circuit, as specified under 6.9.4 I/O Equivalent Circuits.

.

Table 119: Power and Ground Pins

Pin (64 pin)	Pin (100-pin)	Name	Type	Circuit	Description
50	72, 80	GNDA	P	–	Analog ground: This pin should be connected directly to the ground plane.
42	62	GNDD	P	–	Digital ground: This pin should be connected directly to the ground plane.
53	85	V3P3A	P	–	Analog power supply: A 3.3 V power supply should be connected to this pin. V3P3A must be the same voltage as V3P3SYS.
45	69	V3P3SYS	P	–	System 3.3 V supply. This pin should be connected to a 3.3 V power supply.
41	61	V3P3D	O	13	Auxiliary voltage output of the chip. In mission mode, this pin is connected to V3P3SYS by the internal selection switch. In BRN mode, it is internally connected to VBAT. V3P3D is floating in LCD and sleep mode. A 0.1 µF bypass capacitor to ground must be connected to this pin.
40	60	VDD	O	–	The output of the 2.5V regulator. This pin is powered in MSN and BRN modes. A 0.1 µF bypass capacitor to ground should be connected to this pin.
57	89	VLCD	O	–	The output of the LCD DAC. A 0.1 µF bypass capacitor to ground should be connected to this pin.
46	70	VBAT	P	12	Battery backup pin to support the battery modes (BRN, LCD). A battery or super-capacitor is to be connected between VBAT and GNDD. If no battery is used, connect VBAT to V3P3SYS.
47	71	VBAT_RTC	P	12	RTC and oscillator power supply. A battery or super-capacitor is to be connected between VBAT and GNDD. If no battery is used, connect VBAT_RTC to V3P3SYS.

6.9.2 Analog Pins

Table 120: Analog Pins

Pin (64 pin)	Pin (100-pin)	Name	Type	Circuit	Description
55 54 44 43	87 86 68 67	IAP- IAN IBP- IBN	I	6	Differential or single-ended Line Current Sense Inputs: These pins are voltage inputs to the internal A/D converter. Typically, they are connected to the outputs of current sensors. **Unused pins must be tied to V3P3A**. Pins IBP-IBN may be configured for communication with the remote sensor interface (71M6x01). When *RMT_E* = 1 (*I/O RAM 0x2709[3]*), the IBP-IBN pins become balanced differential pair. **If unused, *RMT_E* must be zero and IBP-IBN must tied to V3P3A.**
52 --	82 83	VA VB†	I	6	Line Voltage Sense Inputs: These pins are voltage inputs to the internal A/D converter. Typically, they are connected to the outputs of resistor dividers. **Unused pins must be tied to V3P3A.**
56	88	VREF	O	9	Voltage Reference for the ADC. This pin should be left unconnected (floating).
48 49	75 76	XIN XOUT	I O	8	Crystal Inputs: A 32 kHz crystal should be connected across these pins. Typically, a 15 pF capacitor is also connected from XIN to GNDA and a 10 pF capacitor is connected from XOUT to GNDA. It is important to minimize the capacitance between these pins. See the crystal manufacturer datasheet for details. If an external clock is used, a 150 mV (p-p) clock signal should be applied to XIN, and XOUT should be left unconnected.
† Pin VB only available on 71M6542F/G.					

6.9.3 Digital Pins

Table 121 lists the digital pins. Pin types: P = Power, O = Output, I = Input, I/O = Input/Output, N/C = no connect. The circuit number denotes the equivalent circuit, as specified in 6.9.4 I/O Equivalent Circuits.

Table 121: Digital Pins

Pin (64-pin)	Pin (100-pin)	Name	Type	Circuit	Function
4-7	12–15	COM0–COM3	O	5	LCD Common Outputs. These four pins provide the select signals for the LCD display.
31	45	SEGDIO0/WPULSE	I/O	3, 4, 5	Multiple-Use Pins. Configurable as either LCD segment driver or DIO. Alternative functions with proper selection of associated I/O RAM registers are: SEGDIO0 = WPULSE SEGDIO1 = VPULSE SEGDIO2 = SDCK SEGDIO3 = SDATA SEGDIO6 = XPULSE SEGDIO7 = YPULSE SEGDIO8 = DI **Unused pins must be configured as outputs or terminated to V3P3/GNDD.**
30	44	SEGDIO1/VPULSE			
29	43	SEGDIO2/SDCK			
28	42	SEGDIO3/SDATA			
27	41	SEGDIO4			
26	39	SEGDIO5			
25	38	SEGDIO6/XPULSE			
24	37	SEGDIO7/YPULSE			
23	36	SEGDIO8/DI			
22-17	35–30	SEGDIO[9:14]			
--	29-27	SEGDIO[15:17]			
--	25	SEGDIO[18]			
16-10	24–18	SEGDIO[19:25]			
--	11–4	SEGDIO[28:35]			
63-62	95-94	SEGDIO[44:45]			
--	99–96	SEGDIO[40:43]			
--	52	SEGDIO52			
--	51	SEGDIO53			
--	47	SEGDIO54			
9	17	SEGDIO26/COM5	I/O	3, 4, 5	Multiple-Use Pins. Configurable as either LCD segment driver or DIO with alternative function (LCD common drivers).
8	16	SEGDIO27/COM4			
3	3	SPI_CSZ/SEGDIO36	I/O	3, 4, 5	Multiple-Use Pins. Configurable as either LCD segment driver or DIO with alternative function (SPI interface).
2	2	SPI_DO/SEGDIO37			
1	1	SPI_DI/SEGDIO38			
64	100	SPI_CKI/SEGDIO39			
33	53	OPT_TX/SEGDIO51	I/O	3, 4, 5	Multiple-Use Pins, configurable as either LCD segment driver or DIO with alternative function (optical port/UART1)
32	46	OPT_RX/SEGDIO55			
38	58	E_RXTX/SEG48	I/O	1, 4, 5	Multiuse Pins. Configurable as either emulator port pins (when ICE_E pulled high) or LCD segment drivers (when ICE_E tied to GND).
36	56	E_RST/SEG50			
37	57	E_TCLK/SEG49	O	4, 5	

Pin (64-pin)	Pin (100-pin)	Name	Type	Circuit	Function
39	59	ICE_E	I	2	ICE Enable. When zero, E_RST, E_TCLK, and E_RXTX become SEG50, SEG49, and SEG48 respectively. For production units, this pin should be pulled to GND to disable the emulator port.
60	92	TMUXOUT/SEG47	O	4, 5	Multiple-Use Pins. Configurable as either multiplexer/clock output or LCD segment driver using the I/O RAM registers.
61	93	TMUX2OUT/SEG46			
59	91	RESET	I	2	Chip Reset. This input pin is used to reset the chip into a known state. For normal operation, this pin is pulled low. To reset the chip, this pin should be pulled high. This pin has an internal 30 µA (nominal) current source pulldown. No external reset circuitry is necessary.
35	55	RX	I	3	UART0 Input. **If this pin is unused it must be terminated to V3P3D or GNDD.**
34	54	TX	O	4	UART0 Output
51	81	TEST	I	7	Enables Production Test. **This pin must be grounded in normal operation.**
58	90	PB	I	3	Pushbutton Input. This pin must be at GNDD when not active or unused. A rising edge sets the *WF_PB* flag. It also causes the part to wake up if it is in SLP or LCD mode. PB does not have an internal pullup or pulldown resistor.
--	26, 40, 48, 49, 50, 63, 64, 65, 66, 73, 74, 77, 78, 79, 84	NC	N/C	—	No Connection. Do not connect this pin.

6.9.4 I/O Equivalent Circuits

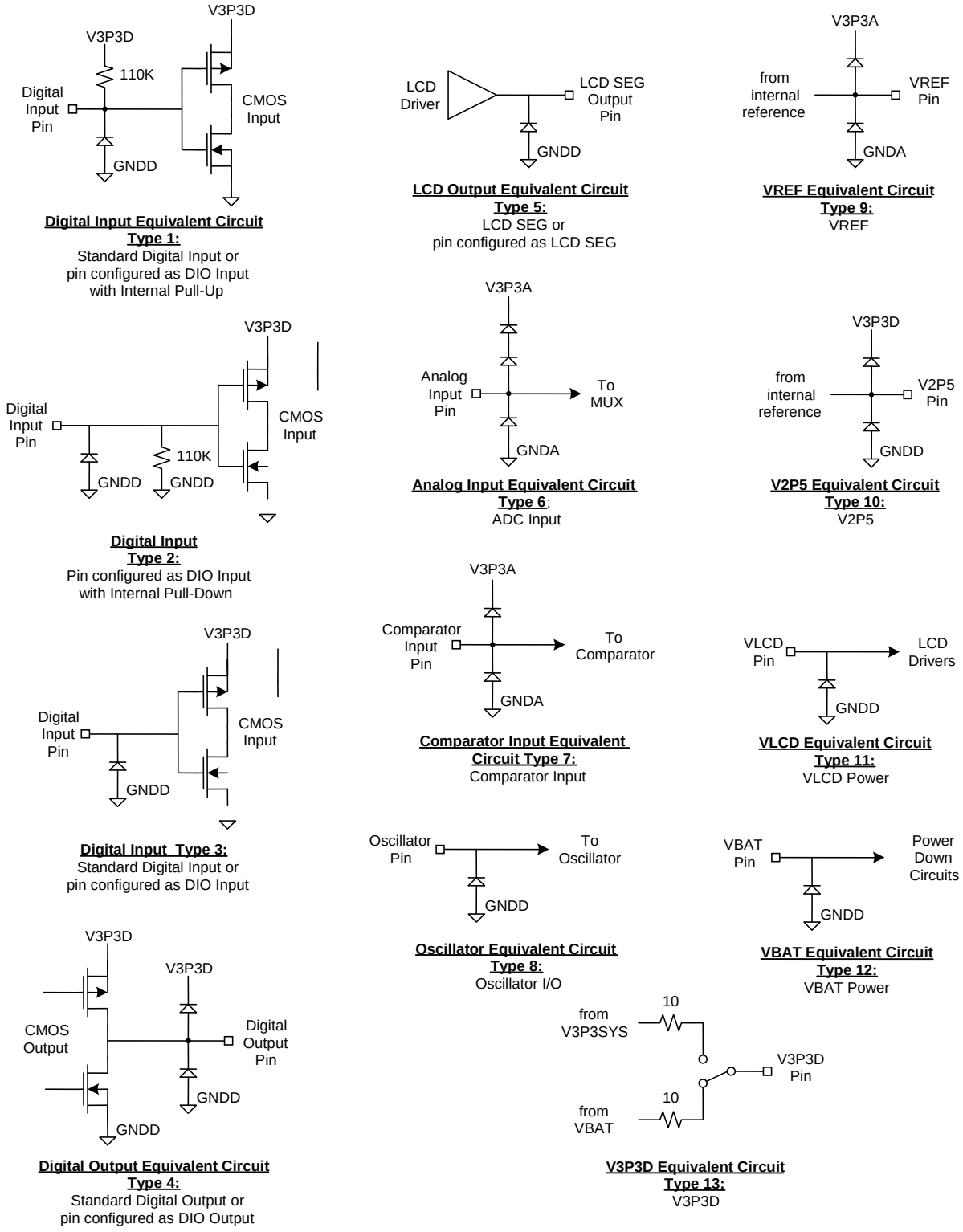

Figure 52: I/O Equivalent Circuits

7 Ordering Information

7.1 71M6541D/F/G and 71M6542F/G

Table 122. Ordering Information

Part	Part Description (Package, Typical Accuracy)	Flash Size	Packaging	Order Number	Package Marking
71M6541D	64-pin LQFP Lead-Free, 0.1%	32 KB	bulk	71M6541D-IGT/F	71M6541D-IGT
71M6541D	64-pin LQFP Lead-Free, 0.1%	32 KB	tape and reel	71M6541D-IGTR/F	71M6541D-IGT
71M6541F	64-pin LQFP Lead-Free, 0.1%	64 KB	bulk	71M6541F-IGT/F	71M6541F-IGT
71M6541F	64-pin LQFP Lead-Free, 0.1%	64 KB	tape and reel	71M6541F-IGTR/F	71M6541F-IGT
71M6541G	64-pin LQFP Lead-Free, 0.1%	128 KB	bulk	71M6541G-IGT/F	71M6541G-IGT
71M6542F	100-pin LQFP Lead-Free, 0.1%	64 KB	bulk	71M6542F-IGT/F	71M6542F-IGT
71M6542F	100-pin LQFP Lead-Free, 0.1%	64 KB	tape and reel	71M6542F-IGTR/F	71M6542F-IGT
71M6542G	100-pin LQFP Lead-Free, 0.1%	128 KB	bulk	71M6542G-IGT/F	71M6542G-IGT
71M6542G	100-pin LQFP Lead-Free, 0.1%	128 KB	tape and reel	71M6542G-IGTR/F	71M6542G-IGT

8 Related Information

Users need these additional documents related to the 71M6541D/F/G and 71M6542F/G:

- *71M6541D/F/G and 71M6542F/G Data Sheet (this document)*
- *71M6xxx Data Sheet*
- *71M6541 Demo Board User's Manual*
- *71M654x Software User's Guide*

9 Contact Information

For more information about Maxim products or to check the availability of the 71M6541D/F/G and 71M6542F/G, contact technical support at **www.maximintegrated.com/support**.

Appendix A: Acronyms

AFE	Analog Front End
AMR	Automatic Meter Reading
ANSI	American National Standards Institute
CE	Compute Engine
DIO	Digital I /O
DSP	Digital Signal Processor
FIR	Finite Impulse Response
I^2C	Inter-IC Bus
ICE	In-Circuit Emulator
IEC	International Electrotechnical Commission
MPU	Microprocessor Unit (CPU)
PLL	Phase-locked loop
RMS	Root Mean Square
SFR	Special Function Register
SOC	System on Chip
SPI	Serial Peripheral Interface
TOU	Time of Use
UART	Universal Asynchronous Receiver/Transmitter

Appendix B: Revision History

REVISION NUMBER	REVISION DATE	DESCRIPTION	PAGES CHANGED
1.0	3/11	Initial release	—
1.1	4/11	Removed the information about 18mW typ consumption at 3.3V in sleep mode from the *Features* section	1
		Updated the Temperature Measurement Equation and Temperature Error parameters in Table 99	141
2	11/11	Promoted 71M6542G to production level (Table 122) Added references to 71M6541G/2G throughout the document, as appropriate. Added missing data sheet title header to odd and even pages. Corrected errata detected since the previous v1.1 (see indicated pages changed). Added section 6.7 on page 156.	1, 9, 10, 27, 49, 54, 56, 62, 97, 120
3	10/13	Added warning note on SPI Flash Mode section, added page numbers and footers for the document, updated IEN0 Bit Function and External MPU Interrupts table, changed CECONFIG bit 23 to reserved, corrected SPI Slave port diagram (Figure 27), added 010 and 011 combination on the RCMD[4:0] Bits table, updated the text description of the Signal Input Pins section, combined columns 3 and 4 of Table 34, updated the Interrupt Structure diagram, changed FLSHPG to PGADR on Table 12, included additional LSBs for ce41a04 (Table 85, Table 87, Table 90, and Table 91), corrected the OPT_TXE active definition, updated the required CE code and settings notes about MUX_DIV[3:0]	All
4	3/14	Removed future status from 71M6541G and removed 71M6541G-IGTR/F in the *Ordering Information* table (Table 122)	164
5	1/15	Updated the *Benefits and Features* section	1

Maxim Integrated cannot assume responsibility for use of any circuitry other than circuitry entirely embodied in a Maxim Integrated product. No circuit patent licenses are implied. Maxim Integrated reserves the right to change the circuitry and specifications without notice at any time. The parametric values (min and max limits) shown in the Electrical Characteristics table are guaranteed. Other parametric values quoted in this data sheet are provided for guidance.

© 2015 Maxim Integrated Products, Inc. Maxim Integrated and the Maxim Integrated logo are trademarks of Maxim Integrated Products, Inc.