THIS DRAWING IS UNPUBLISHED. RELEASED FOR PUBLICATION - -, .
© COPYRIGHT - By - ALL RIGHTS RESERVED.

LOC	DIST
AD	00

REVISIONS

P	LTR	DESCRIPTION	DATE	DWN	APVD
	N2	REVISED PER ECO-11-004917	11MAR11	RK	HMR

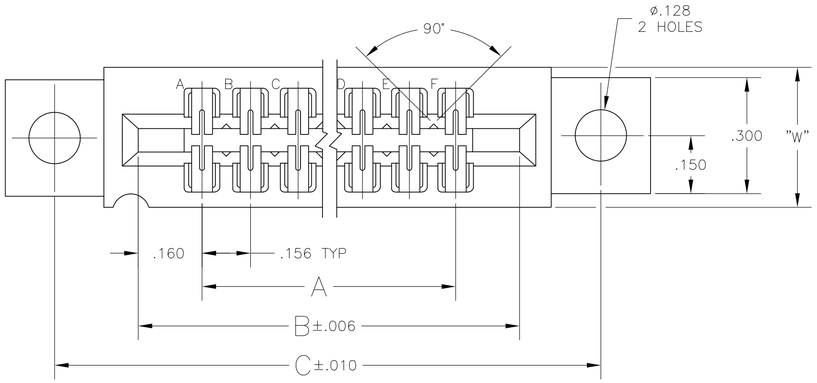

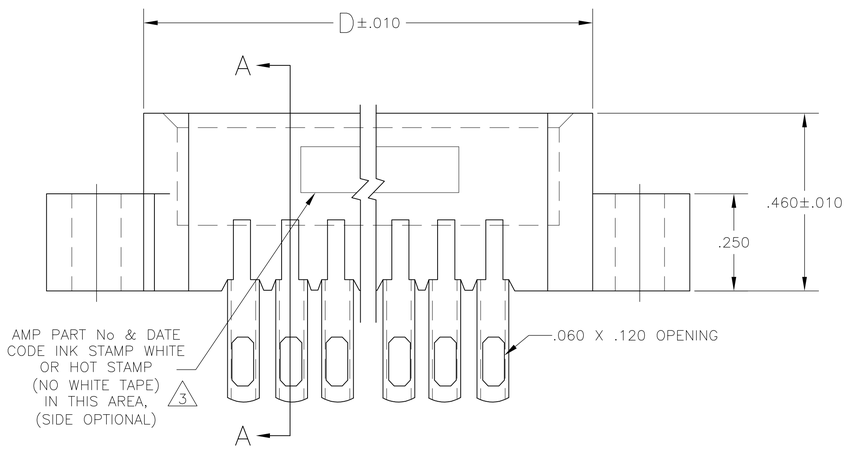

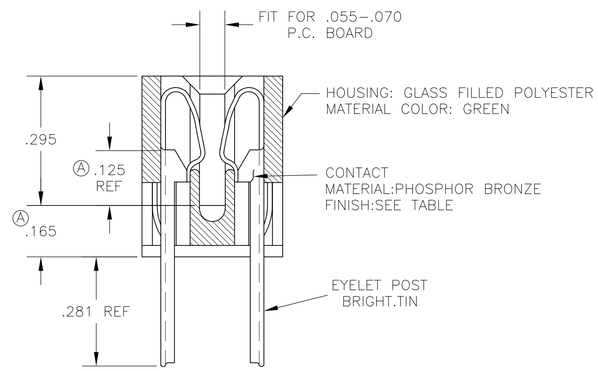

SECTION A-A

1. .000015 MIN GOLD OVER .000050 MIN. NICKEL IN CONTACT AREA.
2. .00003 MIN GOLD OVER .00005 MIN. NICKEL IN CONTACT AREA.
3. ALL PARTS ASSEMBLED IN MEXICO MUST BE STAMPED " ASSY IN MEXICO " THE WORD " MEXICO " CAN BE SUBSTITUTED ONLY WHERE PART SIZE PROHIBITS STAMPING " ASSY IN MEXICO ", INK STAMP COLOR WHITE OR HOT STAMP (NO WHITE TAPE) 115-9009,APPROX WHERE SHOWN SIDE OPTIONAL.
4. MATTE TIN PLATED CONTACT TAILS.
5. OBSOLETE PARTS: OBSOLETE CIS STREAMLINING PER D.RENAUD/D.SINISI

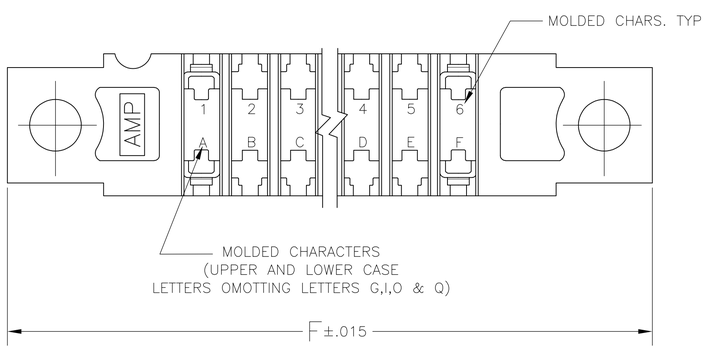

	1 PART NO	NO.OF. POSITION	A	B	C	D	W	F	2 PART NO
5 4 OBSOLETE	–	43	6.552	6.872	7.307	7.012	.437	7.557	8-530654-3
5 4 OBSOLETE	–	28	4.212	4.532	4.967	4.672	.370	5.217	8-530654-2
5 4 OBSOLETE	–	36	5.460	5.780	6.215	5.920	.437	6.465	8-530654-0
4	–	30	4.524	4.844	5.279	4.984	.437	5.529	7-530654-9
5 4 OBSOLETE	–	24	3.588	3.908	4.343	4.048	.370	4.593	7-530654-7
4	–	22	3.276	3.596	4.031	3.736	.370	4.281	7-530654-6
4	–	18	2.652	2.972	3.407	3.112	.370	3.657	7-530654-5
4	–	15	2.184	2.504	2.939	2.644	.370	3.189	7-530654-4
4	–	10	1.404	1.724	2.159	1.864	.370	2.409	7-530654-2
5 4 OBSOLETE	–	6	.780	1.100	1.535	1.240	.370	1.785	7-530654-1
OBSOLETE	~~1-530654-3~~	43	6.552	6.872	7.307	7.012	.437	7.557	~~3-530654-3~~
	~~1-530654-2~~	28	4.212	4.532	4.967	4.672	.370	5.217	~~3-530654-2~~
	~~1-530654-1~~	44	6.708	7.028	7.463	7.168	.437	7.713	~~3-530654-1~~
	~~1-530654-0~~	36	5.460	5.780	6.215	5.920	.437	6.465	~~3-530654-0~~
	~~530654-9~~	30	4.524	4.844	5.279	4.984	.437	5.529	2-530654-9
	~~530654-8~~	25	3.744	4.064	4.499	4.204	.370	4.749	~~2-530654-8~~
	~~530654-7~~	24	3.588	3.908	4.343	4.048	.370	4.593	~~2-530654-7~~
	~~530654-6~~	22	3.276	3.596	4.031	3.736	.370	4.281	2-530654-6
	~~530654-5~~	18	2.652	2.972	3.407	3.112	.370	3.657	2-530654-5
	~~530654-4~~	15	2.184	2.504	2.939	2.644	.370	3.189	2-530654-4
	~~530654-3~~	12	1.716	2.036	2.471	2.176	.370	2.721	~~2-530654-3~~
	~~530654-2~~	10	1.404	1.724	2.159	1.864	.370	2.409	2-530654-2
	~~530654-1~~	6	.780	1.100	1.535	1.240	.370	1.785	2-530654-1

THIS DRAWING IS A CONTROLLED DOCUMENT.

DIMENSIONS: INCHES

TOLERANCES UNLESS OTHERWISE SPECIFIED:
0 PLC ± –
1 PLC ± –
2 PLC ± –
3 PLC ± .005
4 PLC ± –
ANGLES ± –

MATERIAL: SEE CALL-OUT
FINISH: SEE NOTES

DWN – 19MAR75
CHK – 01NOV80
APVD – 01NOV80
PRODUCT SPEC –
APPLICATION SPEC –
WEIGHT –

TE Connectivity

NAME: HOUSING ASSY, LOW PROFILE EDGE CONNECTOR,WITH SOLDER EYELET

SIZE	CAGE CODE	DRAWING NO	RESTRICTED TO
A1	00779	C-530654	–

CUSTOMER DRAWING | SCALE 4:1 | SHEET 1 OF 1 | REV N2

4805 (3/11)