THIS DRAWING IS UNPUBLISHED. RELEASED FOR PUBLICATION -,- .
© COPYRIGHT - By - ALL RIGHTS RESERVED.

LOC	DIST
J	—

REVISIONS 変更

P	LTR	DESCRIPTION	DATE	DWN	APVD
	C4	REVISED ECR-13-017347	07NOV2013	TS	KB

-1: AS SHOWN
本図

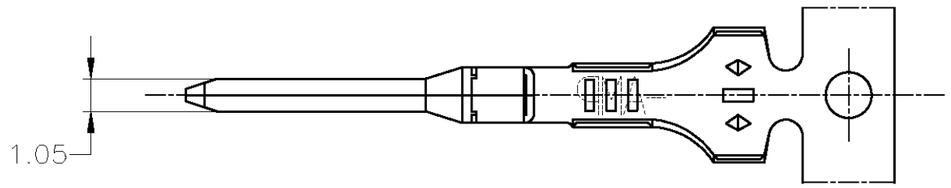

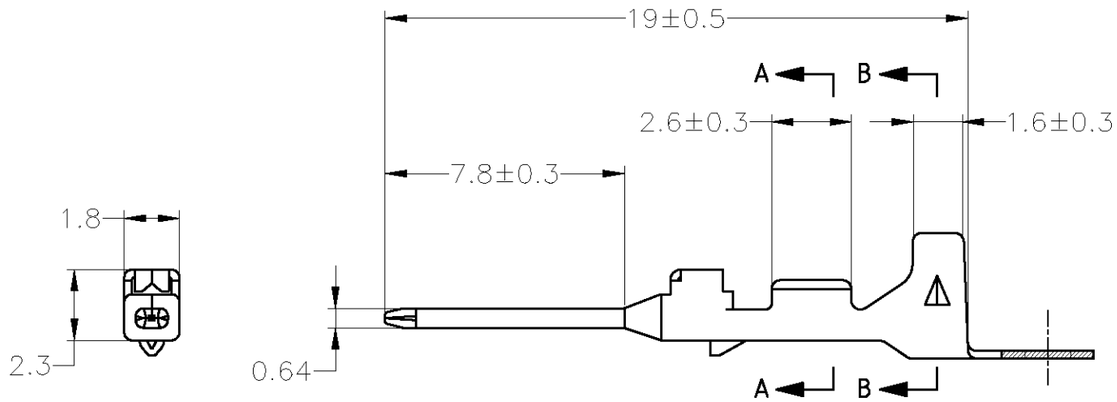

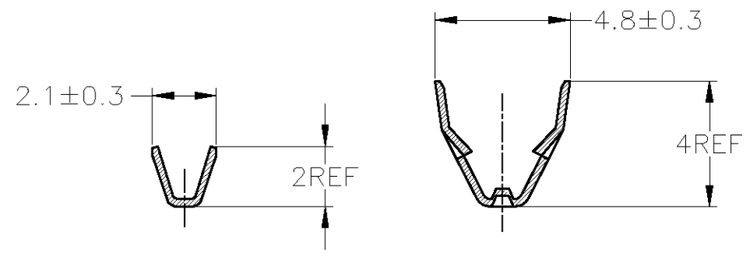

A-A B-B

1. 相手側端子型番：173681
2. バラ状端子型番：175063

1. MATING RECEPTACLE NUMBER; 173681
2. LOOSE PIECE NUMBER: 175063

THIS DRAWING IS A CONTROLLED DOCUMENT.

TOLERANCE UNLESS OTHERWISE SPECIFIED: 一般公差

0 < x ≤ 10	:	±0.2
10 < x ≤ 30	:	±0.25
30 < x ≤ 100	:	±0.3
ANGLE 角度	:	±3°

DIMENSIONS: 単位：耗 mm

TOLERANCES UNLESS OTHERWISE SPECIFIED: 一般公差

0 PLC	± -
1 PLC	± -
2 PLC	± -
3 PLC	± -
4 PLC	± -
ANGLES	± -

MATERIAL 材料: BRASS THICKNESS 黄銅、板厚；0.25

FINISH 仕上: PRE-TINNED 錫めっき済

DWN	M.SUGAWARA	10JAN07
CHK	K.BETSUI	10JAN07
APVD	K.BETSUI	10JAN07
PRODUCT SPEC 製品規格	—	
APPLICATION SPEC 取付適用規格	114-5108	
WEIGHT	0.21g	

TE Connectivity

NAME 名称: 040 SERIES TAB CONTACT

SIZE	CAGE CODE	DRAWING NO 番号	RESTRICTED TO
A3	00779	C-173682	—

CUSTOMER DRAWING

SCALE 尺度	SHEET	REV
5:1	1 OF 1	C4