THIS DRAWING IS UNPUBLISHED. RELEASED FOR PUBLICATION - ,- .
© COPYRIGHT - By - ALL RIGHTS RESERVED.

LOC	DIST
GP	00

REVISIONS

P	LTR	DESCRIPTION	DATE	DWN	APVD
	C1	REVISED PER ECO-11-004835	11MAR11	RK	HMR

EJECTION LATCHES OMITTED IN THIS VIEW FOR CLARITY

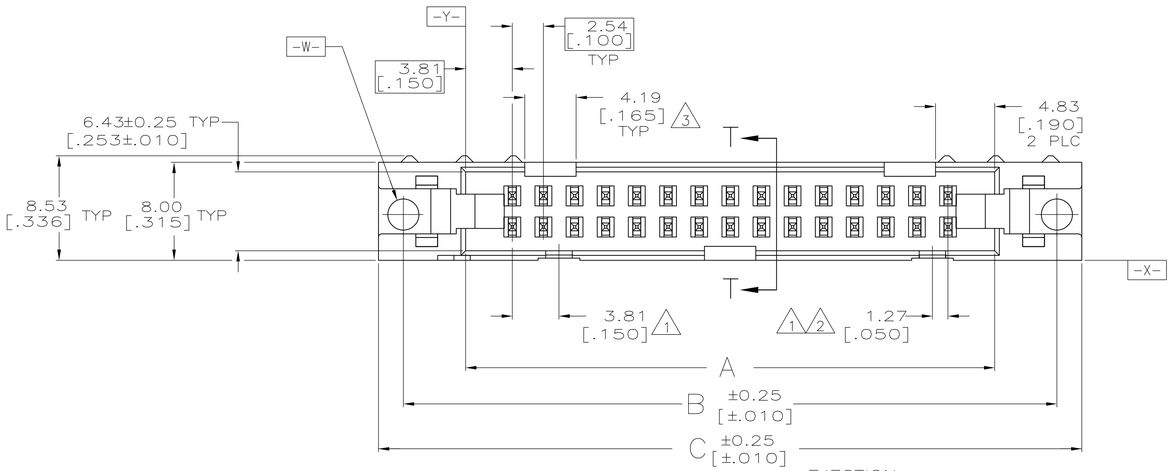

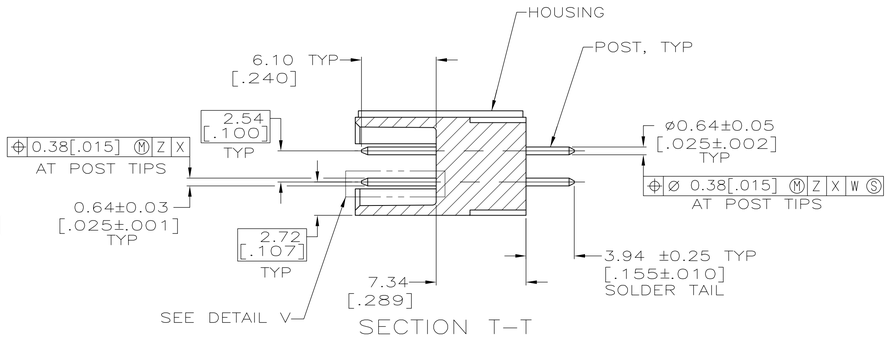

SECTION T-T

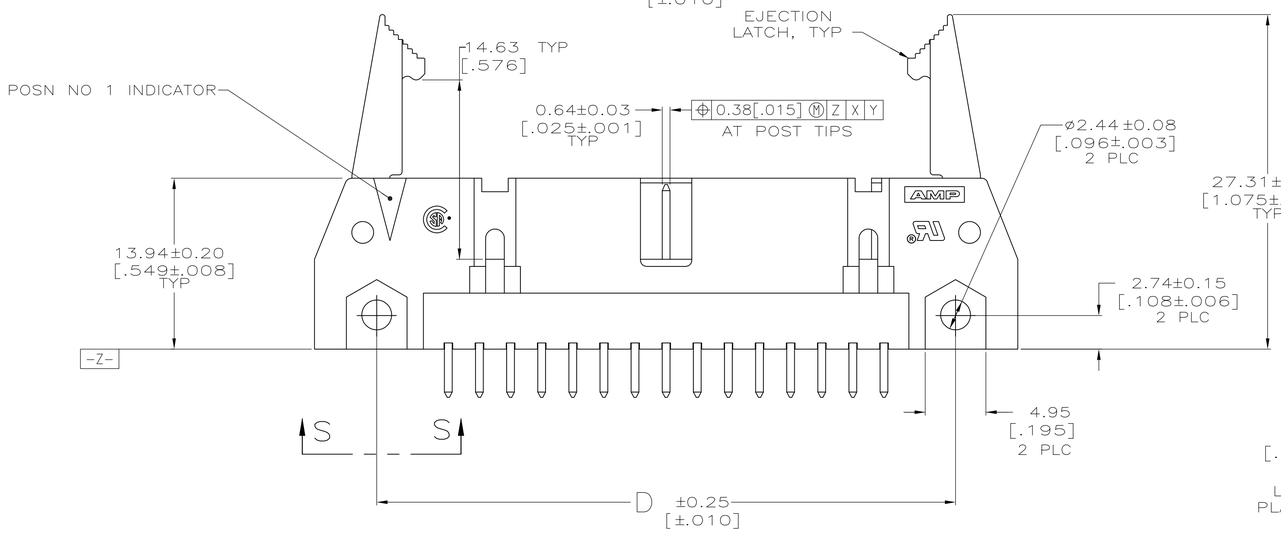

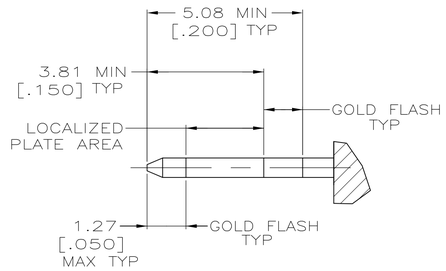

DETAIL V
SCALE 10:1

1. COORDINATE DIMENSION APPLIES FROM BASIC LOCATION.
2. 10 AND 14 POSITION SIZES CONTAIN ONLY ONE SLOT FOR SNAP-IN POLARIZER (MILITARY POLARIZATION) LOCATED AS SHOWN.
3. 10 POSITION SIZES CONTAIN ONLY ONE SLOT FOR DUAL POLARIZATION, LOCATED AS SHOWN.
4. RECOMMENDED PRINTED CIRCUIT BOARD THICKNESS IS 3.18 [.125].
5. DISTANCE REQUIRED BY EJECTION LATCHES IN THE OPEN POSITION.
6. MATERIAL HOUSING & LATCHES: GLASS FILLED NYLON OR POLYESTER, UL94V-0 RATED, BLACK. POSTS: PHOS BRONZE OR BRASS.
7. POSTS: GOLD FLASH OVER PALLADIUM-NICKEL PLATE, 0.38µm[.000015] MIN TOTAL ON THE LOCALIZED PLATE AREA, 2.54µm [.000100] MIN TIN PLATE ON THE SOLDER-TAILS, 1.27µm[.000050] MIN NICKEL UNDERPLATE ON THE ENTIRE POST.
   -OR-
   0.38µm[.000015] MIN GOLD PLATE ON THE LOCALIZED PLATE AREA, 2.54µm[.000100] MIN TIN PLATE ON THE SOLDER-TAILS, 1.27µm[.000050] MIN NICKEL UNDERPLATE ON THE ENTIRE POST.
8. DATUMS -M- & -N- TO BE ESTABLISHED BY CUSTOMER.

	F	E	D	C	B	A	NO OF POSN	PART NUMBER
	78.74 [3.100]	96.52 [3.800]	90.42 [3.560]	100.58 [3.960]	96.52 [3.800]	86.36 [3.400]	64	1-5499923-2
	73.66 [2.900]	91.44 [3.600]	85.34 [3.360]	95.50 [3.760]	91.44 [3.600]	81.28 [3.200]	60	1-5499923-1
	60.96 [2.400]	78.74 [3.100]	72.64 [2.860]	82.80 [3.260]	78.74 [3.100]	68.58 [2.700]	50	1-5499923-0
	48.26 [1.900]	66.04 [2.600]	59.94 [2.360]	70.10 [2.760]	66.04 [2.600]	55.88 [2.200]	40	5499923-9
	40.64 [1.600]	58.42 [2.300]	52.32 [2.060]	62.48 [2.460]	58.42 [2.300]	48.26 [1.900]	34	5499923-8
	35.56 [1.400]	53.34 [2.100]	47.24 [1.860]	57.40 [2.260]	53.34 [2.100]	43.18 [1.700]	30	5499923-7
	30.48 [1.200]	48.26 [1.900]	42.16 [1.660]	52.32 [2.060]	48.26 [1.900]	38.10 [1.500]	26	5499923-6
	27.94 [1.100]	45.72 [1.800]	39.62 [1.560]	49.78 [1.960]	45.72 [1.800]	35.56 [1.400]	24	5499923-5
	22.86 [.900]	40.64 [1.600]	34.54 [1.360]	44.70 [1.760]	40.64 [1.600]	30.48 [1.200]	20	5499923-4
	17.78 [.700]	35.56 [1.400]	29.46 [1.160]	39.62 [1.560]	35.56 [1.400]	25.40 [1.000]	16	5499923-3
OBSOLETE	15.24 [.600]	33.02 [1.300]	26.92 [1.060]	37.08 [1.460]	33.02 [1.300]	22.86 [.900]	14	5499923-2
	10.16 [.400]	27.94 [1.100]	21.84 [.860]	32.00 [1.260]	27.94 [1.100]	17.78 [.700]	10	5499923-1

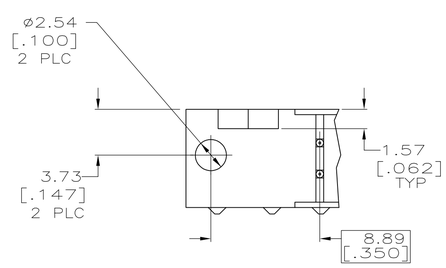

VIEW S-S

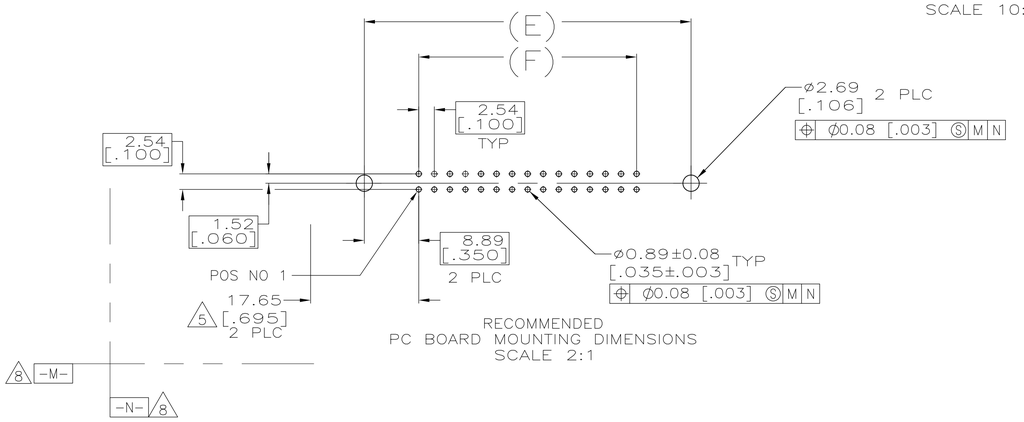

RECOMMENDED PC BOARD MOUNTING DIMENSIONS
SCALE 2:1

THIS DRAWING IS A CONTROLLED DOCUMENT.

DIMENSIONS: mm [INCHES]

TOLERANCES UNLESS OTHERWISE SPECIFIED:
0 PLC ± -
1 PLC ± -
2 PLC ± 0.13[.005]
3 PLC ± -
4 PLC ± -
ANGLES ± -

MATERIAL 6
FINISH 7

DWN 01-11-05 L. VARELA - DOCKS
CHK 01-11-05 S. BOLASH
APVD 01-11-05 M. WALMSLEY
PRODUCT SPEC 108-40018
APPLICATION SPEC —
WEIGHT —

TE Connectivity

NAME HEADER ASSY, UNIVERSAL, AMP-LATCH

SIZE	CAGE CODE	DRAWING NO	RESTRICTED TO
A1	00779	C-5499923	—

CUSTOMER DRAWING | SCALE 4:1 | SHEET 1 OF 1 | REV C1