RoHS Compliant

8STA/8TA Series

Compact Circular Connectors

Derived from JN1003 & MIL-DTL-38999

SOURIAU
Connection Technology

Company Profile

SOURIAU

The extreme environment interconnect specialist «from deep sea to deep space»

The company designs, manufactures and markets high performance interconnect solutions for severe environments from industrial broadline and universal ranges to complex system with integrated functions: filtering, high speed data transmission, hermetic seal, separation mechanism, remote handling, underwater mating, ...

Industrial

Aeronautical

Equipment & System

The dedicated end markets for SOURIAU's products are aeronautical, defense-space and industrial

Railway
Geophysics
Manufacturing environment
Instrumentation
Automation & process
Motorsport

Civil & military aircraft
Helicopter
Weapon delivery system
Avionics

Military marine
Communications
Satellites
Launcher & missile

SOURIAU was established in 1917 and has been created by successive acquisitions of the industrial, aeronautical, defense and space activities of SOURIAU, JUPITER and BURNDY.

The Group's products are engineered and manufactured in the USA and Dominican Republic, Europe and Morocco, Japan and India, and sold by a worldwide sales and marketing organization, and in addition to SOURIAU's offices, a large network of licensed distibutors and agents.

SOURIAU complies with most of national and international Quality Assurance Standards, production unit with ISO 14001

Quality Certificate Management System

ISO 9001

Environment Certificate Management System

ISO 14001

Quality Certificate Management System

Aeronautic Industry : EN 9100

8STA

Contents

Company Profile **2**
Contents **3**
Overview **4-5**
Contact layouts **6-8**
Standard 8STA connectors **9-32**
- 8STA shell size 02 9-12
- 8STA shell size 04 13-16
- 8STA shell size 06-05 17-20
- 8STA shell size 06-35 21-24
- 8STA shell size 08-24 25-32

Specific 8STA connectors **33-58**
- 8STA High Density 33-36
- 8STA Power 37-44
- 8STA with Integrated Clinchnut 45-48
- 8STA Hermetic shell size 02 49-50
- 8STA Hermetic Fuel Tank 51-52
- 8STA/8TA Fuel Immersible 53-56
- 8STA Through Bulkhead 57-58

8TA connector **59-62**
Accessories **63**

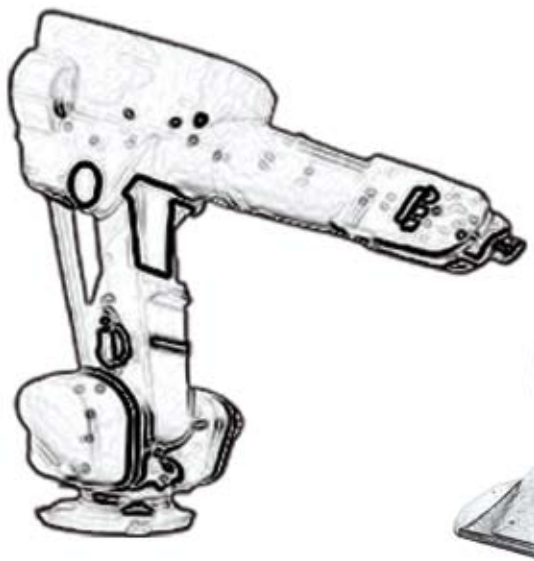

INDUSTRIAL

MOTORSPORT

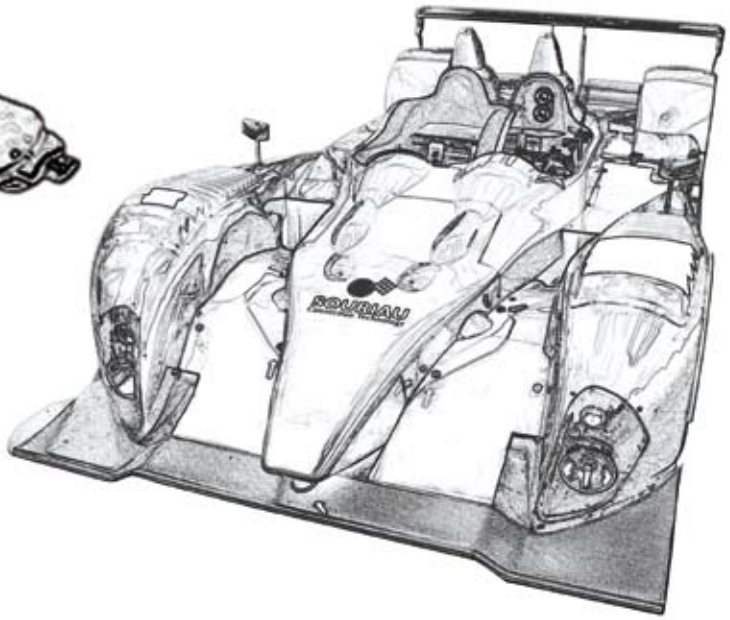

For further information on 8STA connectors, visit our website **www.motorsport-connectors.com**
or contact us at **contactindustry@souriau.com**

Overview

Introduction

8STA & 8TA circular connectors are derived from international military specifications MIL-DTL-38999 & Eurofighter JN 1003, and are designed to withstand high levels of shock & vibration in harsh environments.

One of the primary objectives with this product family, is to push the boundaries in terms of miniaturization and weight reduction, as demonstrated by the introduction of the worlds smallest, & now most popular connector of this type; 8STA size 2. Continuing on with this theme, several new products can be found in this latest catalogue, including chassis mounted receptacles with integrated nuts, eliminating the need for nut plates, lightweight cable receptacles, hermetic size 2 connectors and High Density 8STA with pin counts normally associated with much larger connectors.

8STA & 8TA connectors are recommended for harsh environment applications where size and weight should be minimized, such as Motorsport, Industrial applications, Unmanned Aerial Vehicles, Rugged Instrumentation, Future Soldier electronics etc.

8STA shell size 02 - *page 9 to 12*

8STA shell size 04 - *page 13 to 16*

8STA shell size 06-05 - *page 17 to 20*

8STA shell size 06-35 - *page 21 to 24*

8STA shell size 08 to 24 - *page 25 to 32*

8STA High Density - *page 33 to 36*

Overview

8STA Power & Mixed signal/power - *page 37 to 44*

8STA with Integrated Clinchnut - *page 45 to 48*

8STA Hermetic shell size 02 - *page 49 to 50*

8STA Hermetic Fuel Tank - *page 51 to 52*

8STA / 8TA Fuel Immersible - *page 53 to 56*

8STA Through Bulkhead - *page 57 to 58*

8STA Grounded Connector - *page 11 & 59*

8TA Connector - *page 59 to 62*

8STA

Contact layouts

Size 02

05	35
5 #26 Service R	3 #22D Service S

Size 04

05	06	35
5 #26 Service R	6 #26 Service R	3 #22D Service S

Size 06

05	35
5 #26 Service M	3 #22D Service M

Size 08

35	98
6 #22D Service M	3 #20 Service I

Size 10

01	02	04	05	35	80*	98	99
1 #12 Service II	2 #16 Service I	4 #20 Service I	5 #20 Service I	13 #22D Service M	1 #8 power Service I	6 #20 Service I	7 #20 Service I

** specif 251 only*

Size 12

01*	03	04	08	26	35	43	98
1 #4 power Service M	3 #16 Service I	4 #16 Service I	8 #20 Service I	6 #22D 2#12 Service M	22 #22D Service M	43 #26 Service R	10 #20 Service I

** specif 261 only*

For both 8STA & 8TA, all others being for 8STA only.

8STA

Size 14

05 ▲	15 ▲	18 ▲ ■	19 ▲ ■	35 ▲ ■	97 ▲ ●
5 #16 Service II	14 #20 1 #16 Service I	18 #20 Service I	19 #20 Service I	37 #22D Service M	8 #20 4 #16 Service I

Size 16

02* ▲	06 ▲	08 ▲	26 ▲ ■	35 ▲ ■	75* ▲	99 ▲
1 #8 power 38 #22D Service N	6 #12 Service I	8 #16 Service II	26 #20 Service I	55 #22D Service M	2 #8 power Service M	2 #16 21 #20 Service I

** specif 251 only*

Size 18

11 ▲	18* ▲	28 ▲	32 ▲ ■	35 ▲ ■
11 #16 Service II	14 #22D 4 #8 power Service M	26 #20 2 #16 Service I	32 #20 Service I	66 #22D Service M

** specif 251 only*

Size 20

11 ▲	16 ▲	35 ▲ ■	39 ▲	41 ▲ ■	75* ▲	48 ▲	78* ▲
11 #12 Service I	16 #16 Service II	79 #22D Service M	37 #20 2 #16 Service I	41 #20 Service I	4 #8 power Service M	4 #8 power Service I	17 #22D 2 #8 power Service M

** specif 251*

▲ Crimp contact layouts
■ PC tail contact layouts
● Solder cup contact layouts

Shell sizes 22 & 24, please see next page.

8STA

Size 22

21 ▲

21 #16
Service II

32 ▲

32 #20
Service I

35 ▲ ■

100 #22D
Service M

53 ▲ ■

53 #20
Service I

54 ▲

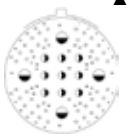

40 #22D
9 #16
4 #12
Service M

55 ▲ ■

55 #20
Service I

Size 24

04 ▲

48 #20
8 #16
Service I

07* ▲

2 #8 power
97 #22D
Service M

19 ▲

19 #12
Service I

24 ▲

12 #12
12 #16
Service II

29 ▲

29 #16
Service I

35 ▲ ■

128 #22D
Service M

37 ▲

37 #16
Service I

41* ▲

22 #22D
3#20, 11#16
2#12, 3#8 power
Service N

43 ▲

20 #16
23 #20
Service I

44 ▲

4 #4 power
4 #16
Service I

46* ▲

2 #8 power
4 #16
40 #20
Service I

61 ▲ ■

61 #20
Service I

** specif 251 only*

- Contact #22D
- Contact #12
- Contact #20
- Contact #8 power
- Contact #16
- Contact #4 power

▲ Crimp contact layouts
■ PC tail contact layouts
• Solder cup contact layouts

Service	Sea level	at 21 000 m
R	400	N/A
S	1000	N/A
M	1300	800
N	1000	600
I	1800	1000
II	2300	1000

8STA shell size 02

Features & Benefits

- The smallest circular connector with removable contacts #26
- Ultra compact design & very lightweight connector
- Rugged aluminium body to ensure long service life in the harshest environment
- Positive locking mechanism with locked colour indicators
- 7 colour-coded keyway orientations
- Boot termination feature
- PCB option available
- Conductive black zinc plating

Technical characteristics

Mechanical

• Shell	Aluminium alloy
• Shell plating	Conductive black zinc (standard)
• Insulator	Thermoplastic
• Grommet & seal	Liquid silicone rubber
• Contact	Copper alloy
• Contact plating	Gold
• Endurance	500 matings/unmatings
• Shock	300 g for 3 ms and EIA-364-27
• Vibration	147 m/s2, 10 to 2000 Hz
• Contact retention	35 N (size 26) 45 N (size 22D)

Electrical

• Test voltage	400 Vrms (size 26) 1000 Vrms (size 22D)
• Contact resistance	< 16 mΩ (size 26) < 14.6 mΩ (size 22D)
• Insulation resistance	> 5000 mΩ (at 400 Vdc / size 26) > 5000 mΩ (at 500 Vdc / size 22D)
• Contact rating	3 A (size 26) 5 A (size 22D)

Climatic

• Temperature range	-55°C to +175°C
• Sealing mated connectors	IP67 (1 metre for 30 min. minimum)
• Salt spray	48 hours

8STA shell size 02

How to order

Basic series		**8STA**	**0**	**-**	**02**	**05**	**P**	**N**	**-**
Shell style	**0:** Oval flange receptacle **1:** In-line receptacle **2:** Oval flange receptacle with PCB contacts **6:** Plug								
Plating	**- :** Standard version **F:** Nickel version								
Shell size	**02**								
Contact layouts	See page 6-8								
Type of contacts	**P:** Pin contacts **S:** Socket contacts								
Orientations	**N:** Red / **A:** Yellow / **B:** Blue / **C:** Orange / **D:** Green / **E:** Grey / **U:** Universal								
Specification	**- :** Standard version **499:** Integrated nut on the flange - M2 insert (only for shell style 0 & 2) - *for more details, please see page 45-48* **528:** Integrated nut on the flange - M2.5 insert (only for shell style 0 & 2) - *for more details, please see page 45-48*								

Range presentation

Plug

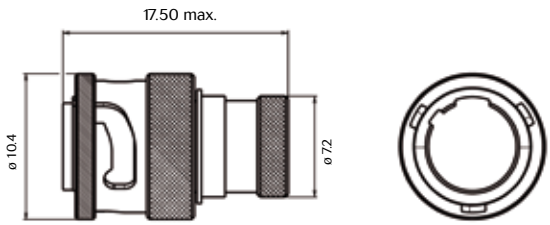

In-line receptacle

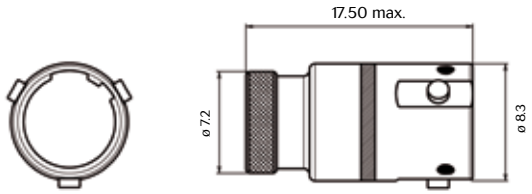

Oval flange receptacle

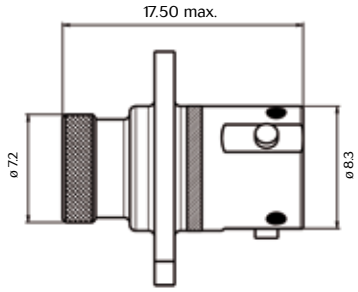

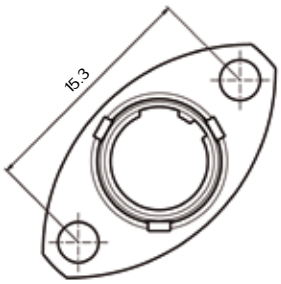

Panel cut out

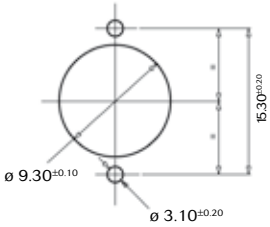

Note : all dimensions are in mm

8STA shell size 02

Oval flange receptacle with PCB contacts

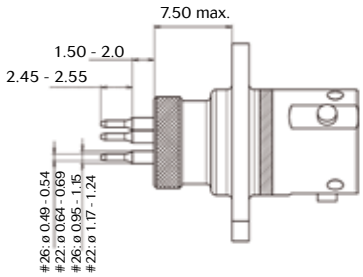

Panel cut out

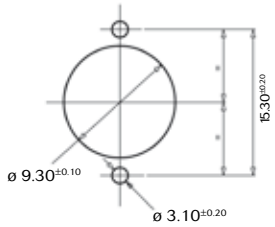

Grounded receptacle

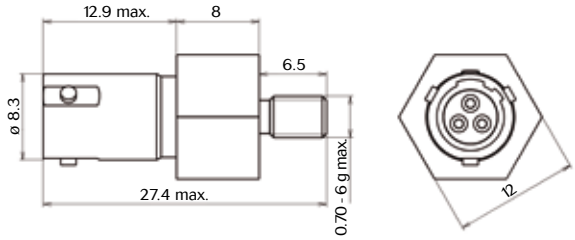

Please consult us for more information

Orientation

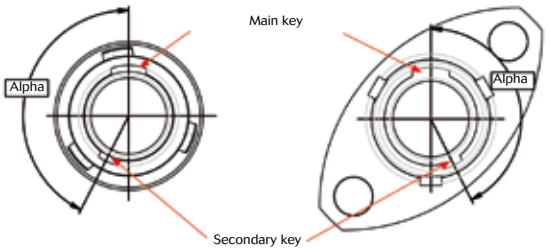

Viewed from face of plug

Viewed from face of receptacle

Key positions	Alpha	Colour band
N	153°	RED
A	51°	YELLOW
B	102°	BLUE
C	204°	ORANGE
D	255°	GREEN
E	306°	GREY

Main key remains fixed. 8STA 02-05 & 8STA 02-35 have the same orientations. Keyways width dimensions are different to avoid wrong mating in blind conditions.

Note : all dimensions are in mm

8STA shell size 02

Contacts

Crimped & PCB contacts

Contact size	Contact type	Contact Ø	Part numbers	Admissible wire section				External dia. over insulation (mm)	
				AWG		mm²			
Crimp contact				Min.	Max.	Min.	Max.	Min.	Max.
22D	Male	0.76	8599-0702 JJ	28	22	0.095	0.38	0.71	1.37
	Female		8599-0710 900						
26	Male	0.50	8599 1001-JL	30	24	0.095	0.24	0.60	0.83
	Female		8599 1002-900						

PCB contact			Part numbers
22D	Male	0.76	8599 1031-JJ
	Female		8599 1032-900
26	Male	0.50	8599 1004-JL
	Female		8599 1005-900

Crimping tools

Contact size	Wire sizes	Type	Locator part number	Tool part number
22D	22 to 28	Male	8476 09	M22520/2-01
		Female	8476 06	
26	24 to 30	Male	640 088	
		Female	640 089	

Accessories

Insertion & extraction tools

M81969/14-01

8599-1006

Contact size	Part numbers	Colour	
		Insertion	Extraction
22D	M81969/14-01 (plastic)	Green	White
26	8599-1006 (metallic)	Extraction only	

Shrinkable termination detail

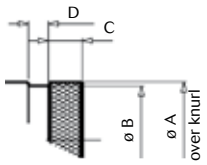

ø A	B±0.05	C±0.05	D±0.05
7.2	6.55	2.2	2.30

Metal protective cap

Plug cap: 8STA802

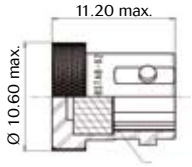

Receptacle cap: 8STA902

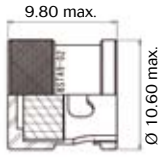

Note : all dimensions are in mm

8STA shell size 04

Features & Benefits

- Rugged aluminium body to ensure long service life in the harshest environment
- Optimum space & weight saving whilst achieving maximum strength
- Option of either #22 or #26 gold plated crimp contact or PCB contact available
- Environmental sealing from interfacial seal and rear grommet
- Positive locking mechanism with locked colour indicators
- 6 colour- coded keyway orientations
- Boot termination feature
- Conductive black zinc plating

Technical characteristics

Mechanical

• Shell	Aluminium alloy
• Shell plating	Conductive black zinc (standard)
• Insulator	Thermoplastic
• Grommet & seal	Liquid silicone rubber
• Contact	Copper alloy
• Contact plating	Gold
• Endurance	500 matings/unmatings
• Shock	300 g for 3 ms and EIA-364-27
• Vibration	147 m/s2, 10 to 2000 Hz
• Contact retention	35 N (size 26) 45 N (size 22D)

Electrical

• Test voltage	400 Vrms (size 26) 1000 Vrms (size 22D)
• Contact resistance	< 16 mΩ (size 26) < 14.6 mΩ (size 22D)
• Insulation resistance	> 5000 mΩ (at 400 Vdc / size 26) > 5000 mΩ (at 500 Vdc / size 22D)
• Contact rating	3 A (size 26) 5 A (size 22D)

Climatic

• Temperature range	-55°C to +175°C
• Sealing mated connectors	IP67 (1 metre for 30 min. minimum)
• Salt spray	48 hours

8STA shell size 04

How to order

Basic series	8STA	0	-	04	05	P	N	-
Shell style	**0:** Oval flange receptacle **1:** In-line receptacle **2:** Oval flange receptacle with PCB contacts **6:** Plug **7:** Jam nut receptacle							
Plating	**- :** Standard version **F:** Nickel version							
Shell size	**04**							
Contact layouts	see page 6-8							
Type of contacts	**P:** Pin contacts **S:** Socket contacts							
Orientations	**N:** Red / **A:** Yellow / **B:** Blue / **C:** Orange / **D:** Green / **U:** Universal							
Specification	**- :** Standard version **499:** Integrated nut on the flange - M2 insert (only for shell style 0 & 2) - *for more details, please see page 45-48* **528:** Integrated nut on the flange - M2.5 insert (only for shell style 0 & 2) - *for more details, please see page 45-48* **022:** Fuel immersible version - *for more details, please see page 53-56*							

Range presentation

Plug

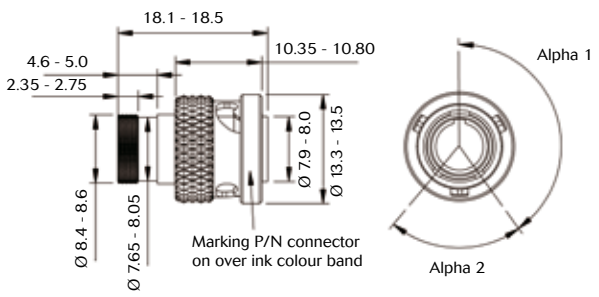

In-line receptacle

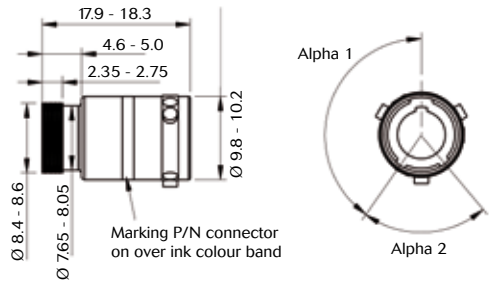

Oval flange receptacle

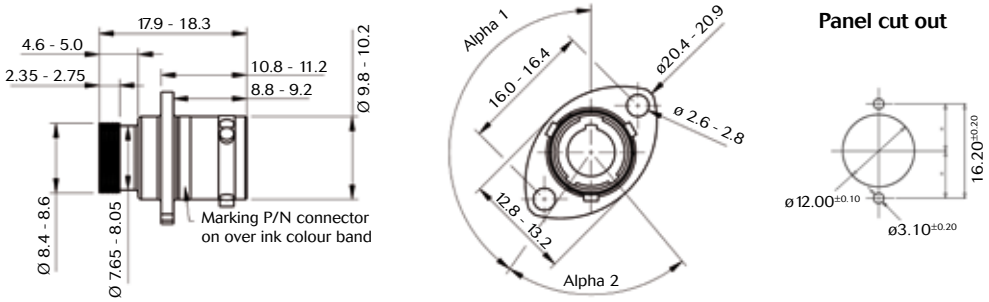

Note : all dimensions are in mm

8STA shell size 04

Oval flange receptacle with PCB contacts

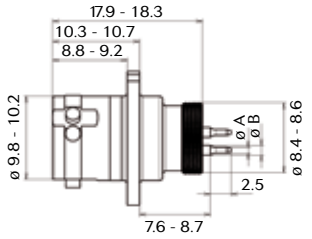

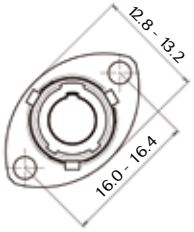

Panel cut out

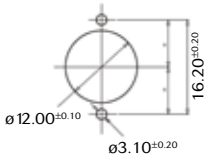

Layouts	Contacts	ø A	ø B
04-35	3 contacts #22D	0.64 / 0.69	1.19 / 1.24
04-05	5 contacts #26	0.49 / 0.54	1.1 / 1.15
04-06	6 contacts #26	0.49 / 0.54	1.1 / 1.15

For contact P/N, please consult us

Jam nut receptacle

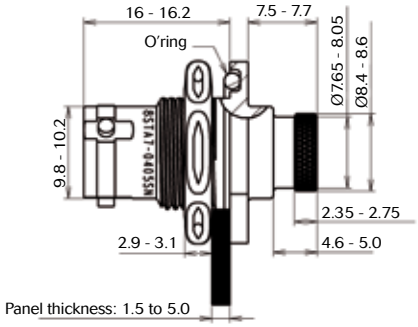

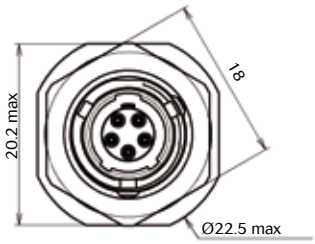

Panel cut out

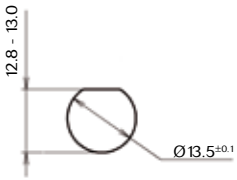

Orientation

Key positions	Alpha 1	Alpha 2	Colour band
N	145°	75°	RED
A	130°	120°	YELLOW
B	110°	120°	BLUE
C	155°	115°	ORANGE
D	90°	115°	GREEN
U	NONE	NONE	NONE

Note : all dimensions are in mm

8STA shell size 04

Contacts

Crimped contacts

Contact size	Contact type	Contact Ø	Part numbers	Admissible wire section				External dia. over insulation (mm)	
				AWG		mm²			
Crimp contact				Min.	Max.	Min.	Max.	Min.	Max.
22D	Male	0.76	8599-0702 JJ	28	22	0.095	0.38	0.71	1.37
	Female		8599-0710 900						
26 - layout 04-05	Male	0.50	8599-0777 LY	30	24	0.095	0.24	0.60	0.83
	Female		8599-0778 900						
26 - layout 04-06	Male		8599-1001 JL						
	Female		8599-1002 900						

Crimping tools

Contact size	Wire sizes	Type	Locator part number		Tool part number	
			Spec.	SOURIAU	Spec.	SOURIAU
22D	22 to 28	Male	M22520/2-09	8476-09	M22520/2-01	8476--01
		Female	M22520/2-06	8476-06		
26 - layout 04-05	24 to 30	Male	-	8599-0050		
		Female	-	8599-0051		
26 - layout 04-06		Male	-	640 088		
		Female	-	640 089		

Accessories

Insertion & extraction tools

M81969/14-01

8599-1006

Contact size	Part numbers	Colour	
		Insertion	Extraction
22D	M81969/14-01 (plastic)	Green	White
26 - layout 04-05			
26 - layout 04-06	8599-1006 (metallic)	-	

Shrinkable termination detail

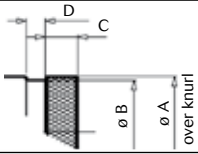

ø A	B±0.05	C±0.05	D±0.05
8.65	8.00	2.70	2.30

Filler plug

Direction of insertion

Contact size	Part numbers		Colour
	Spec.	SOURIAU	
22D	MS27488-22	8660-212	Black

not available for contact #26

Metal protective cap

Plug cap: 8STA804

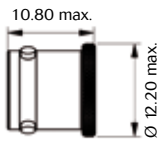

Receptacle cap: 8STA904

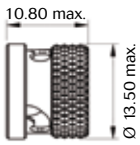

Note : all dimensions are in mm

8STA shell size 06-05

Features & Benefits

- Rugged aluminium body to ensure long service life in the harshest environment
- Small compact connector with boot termination feature
- Environmental sealing from interfacial seal and rear grommet
- Positive locking mechanism with locked colour indicators
- 6 colour-coded keyway orientations
- Conductive black zinc plating
- Available with 5 contacts #26 (crimp or PCB)

Technical characteristics

Mechanical

• Shell	Aluminium alloy
• Shell plating	Conductive black zinc
• Insulator	Thermoplastic
• Grommet & seal	Liquid silicone rubber
• Contact	Copper alloy
• Contact plating	Gold
• Endurance	500 matings/unmatings
• Shock	300 g for 3 ms and EIA-364-27
• Vibration	147 m/s2, 10 to 2000 Hz
• Contact retention	45 N

Electrical

• Test voltage	1300 Vrms
• Contact resistance	< 16 mΩ
• Insulation resistance	> 5000 mΩ (at 500 Vdc)
• Contact rating	3 A

Climatic

• Temperature range	-55°C to +175°C
• Sealing mated connectors	IP67 (1 metre for 30 min. minimum)
• Salt spray	48 hours

8STA shell size 06-05

How to order

Basic series	8STA	0	06	05	P	N	-
Shell style	**0:** Oval flange receptacle (for front or rear mounting) **1:** In-line receptacle **2:** Oval flange receptacle with PCB contacts **6:** Plug						
Shell size	06						
Contact layouts	05 (5 contacts #26)						
Type of contacts	**P:** Pin contacts **S:** Socket contacts						
Orientations	**N:** Red / **A:** Yellow / **B:** Blue / **C:** Orange / **D:** Green / **U:** Universal						
Specification	**- :** Standard version **528:** Integrated nut on the flange - M2.5 insert (only for shell style 0 & 2) - *for more details, please see page 45-48*						

Range presentation

Plug

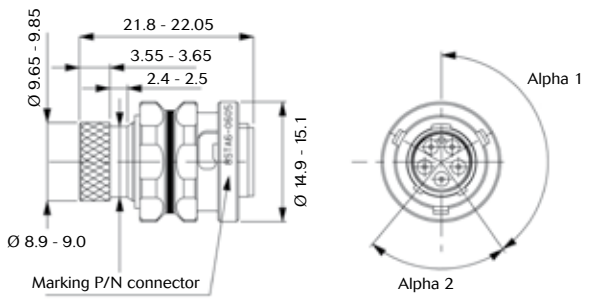

In-line receptacle

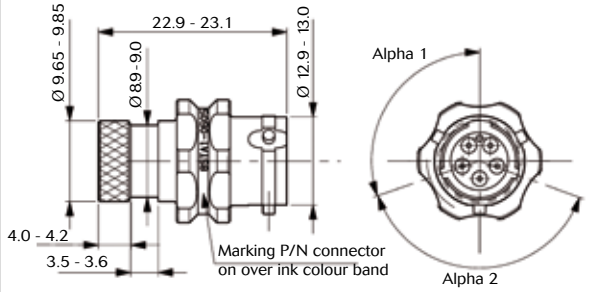

Oval flange receptacle

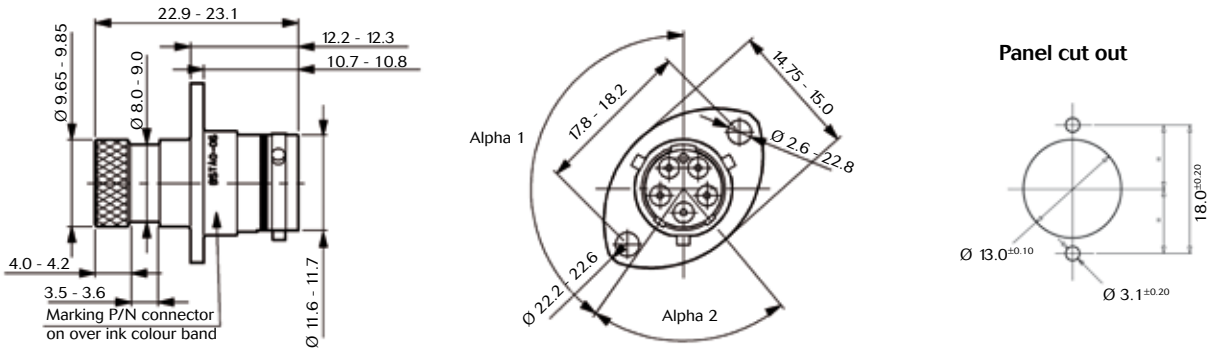

Note : all dimensions are in mm

8STA shell size 06-05

Oval flange receptacle with PCB contacts

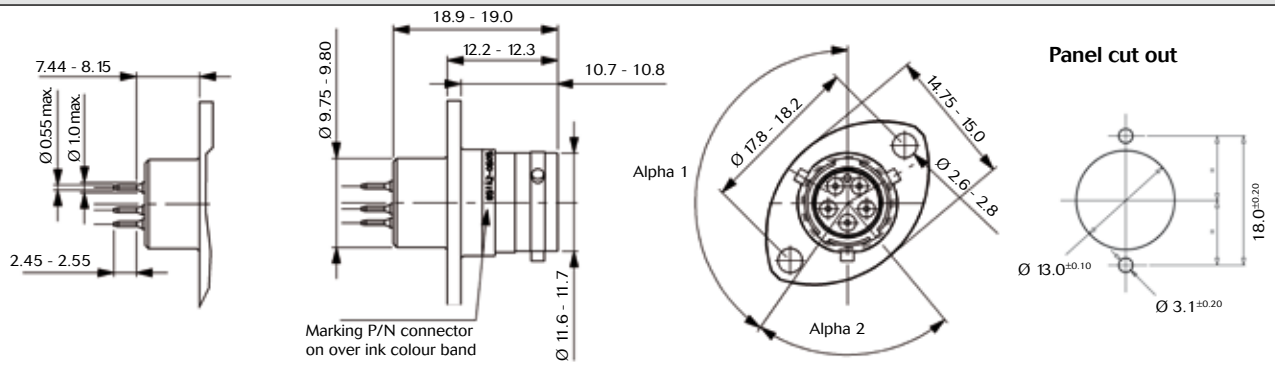

Orientation

Key positions	Alpha 1	Alpha 2	Colour band
N	145°	75°	RED
A	130°	120°	YELLOW
B	110°	120°	BLUE
C	155°	115°	ORANGE
D	90°	115°	GREEN
U	NONE	NONE	NONE

Note : all dimensions are in mm

8STA shell size 06-05

Contacts

Crimped & PCB contacts

Contact size	Contact type	Contact Ø	Part numbers	Admissible wire section				External dia. over insulation (mm)	
				AWG		mm²			
Crimp contact				Min.	Max.	Min.	Max.	Min.	Max.
26	Male	0.50	8599-7922 LY	30	24	0.095	0.24	0.60	0.83
	Female		8599-7923 900						

PCB contact			Part numbers
26	Male	0.50	F1P1P3C-0001ALY
	Female		F1P1ES3-2601A00

Crimping tools

Contact size	Wire sizes	Type	Locator part number	Plier part number	
			SOURIAU	Spec.	SOURIAU
26	24 to 30	Male	8599-0048	M22520/2-01	8476-01
		Female	8599-0049		

Accessories

Insertion & extraction tool

Contact size	Part numbers		Colour	
	Spec.	SOURIAU	Insertion	Extraction
26	M81969/14-01	-	Green	White

Shrinkable termination detail

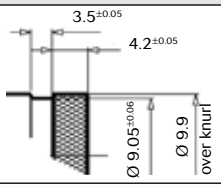

Metal protective cap

Plug cap
8STA806

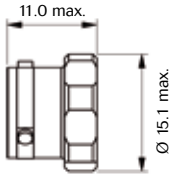

Receptacle cap
8STA906

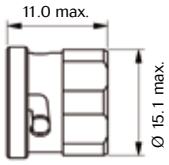

Note : all dimensions are in mm

8STA shell size 06-35

Features & Benefits

- Rugged aluminium body to ensure long service life in the harshest environment
- 5 rugged gold plated MIL spec contact #22D
- PCB contacts option available
- The composite version will provide you the lightest and most reliable solution for applications with high salt spray level. The aluminium type is excellent for harshest environment or where additional mechanical strength is required.
- Environmental sealing from interfacial seal and rear grommet
- Positive locking mechanism with locked colour indicators
- 6 colour-coded keyway orientations
- Boot termination feature

Technical characteristics

Mechanical	Composite version	Aluminium version
• Shell	Glass fibre loaded plastic	Aluminium alloy
• Shell plating	No plating	Nickel or Conductive black zinc
• Insulator	Thermoplastic	Thermoplastic
• Grommet & seal	Liquid silicone rubber	Liquid silicone rubber
• Contact	Copper alloy	Copper alloy
• Contact plating	Gold	Gold
• Endurance	500 matings/unmatings	500 matings/unmatings
• Shock	300 g for 3 ms and EIA-364-27	300 g for 3 ms and EIA-364-27
• Vibration	147 m/s2, 10 to 2000 Hz	147 m/s2, 10 to 2000 Hz
• Contact retention	45 N	45 N
Electrical		
• Test voltage	1300 Vrms	1300 Vrms
• Contact resistance	< 14.6 mΩ	< 14.6 mΩ
• Insulation resistance at 500 Vdc	≥ 5000 mΩ	≥ 5000 mΩ
• Contact rating	5 A	5 A
Climatic		
• Temperature range	-55°C to +175°C	-55°C to +175°C
• Sealing mated connectors	IP67 (1 metre for 30 min. minimum)	IP67 (1 metre for 30 min. minimum)
• Salt spray	500 hours	48 hours

8STA shell size 06-35

How to order

Basic series		**8STA**	**0**	**X**	**06**	**35**	**P**	**N**	**-**
Shell style	**0:** Oval flange receptacle (for front or rear mounting) **1:** In-line receptacle **2:** Oval flange receptacle with PCB contacts **6:** Plug								
Plating	**- :** Standard version **X:** Composite version **F:** Nickel version								
Shell size	06								
Contact layouts	35 (5 contacts #22D)								
Type of contacts	**P:** Pin contacts **S:** Socket contacts								
Orientations	**N:** Red / **A:** Yellow / **B:** Blue / **C:** Orange / **D:** Green / **U:** Universal (only in aluminium alloy)								
Specification	**- :** Standard version **528:** Integrated nut on the flange - M2.5 insert f (only for shell style 0 & 2) - *for more details, please see page 45-48*								

Range presentation

Plug

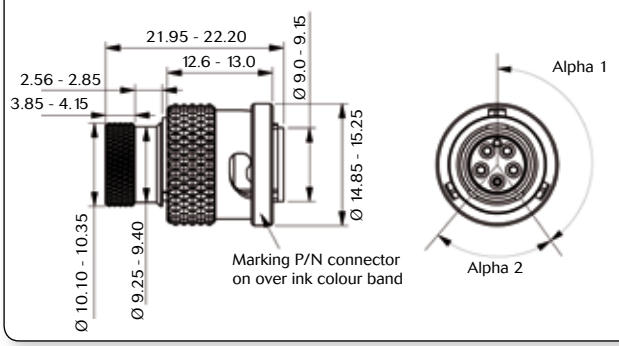

In-line receptacle

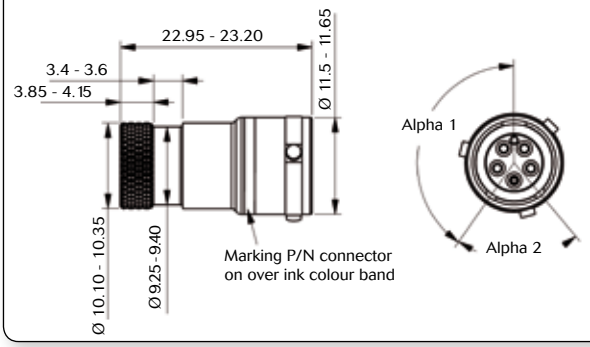

Oval flange receptacle

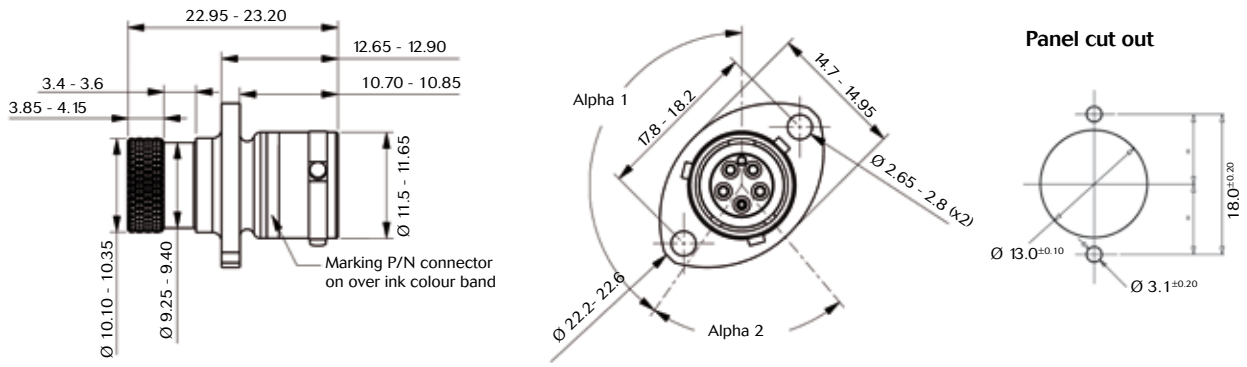

Note : all dimensions are in mm

8STA shell size 06-35

Oval flange receptacle with PCB contacts

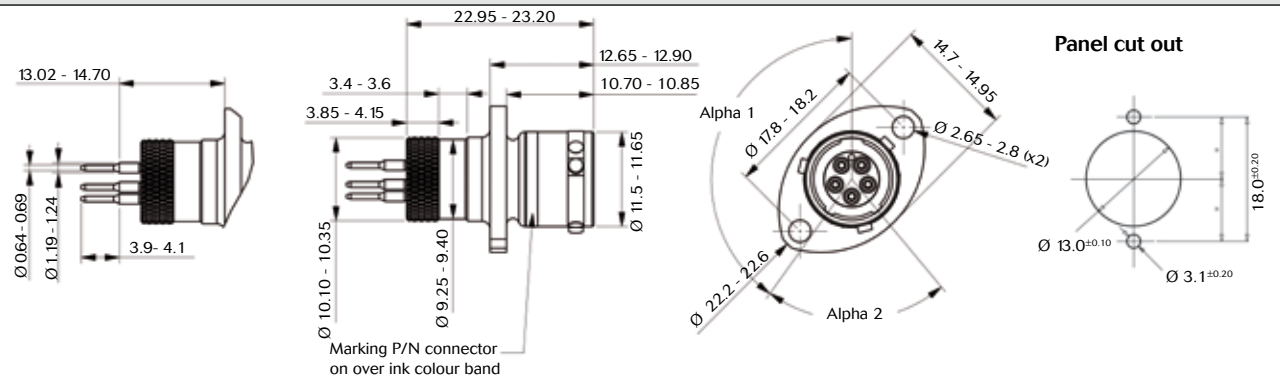

Orientation

Key positions	Alpha 1	Alpha 2	Colour band
N	145°	75°	RED
A	130°	120°	YELLOW
B	110°	120°	BLUE
C	155°	115°	ORANGE
D	90°	115°	GREEN
U	NONE	NONE	NONE

Note : all dimensions are in mm

8STA shell size 06-35

Contacts

Crimped & PCB contacts

Contact size	Contact type	Contact Ø	Part numbers	Admissible wire section				External dia. over insulation (mm)	
				AWG		mm²			
Crimp contact				Min.	Max.	Min.	Max.	Min.	Max.
22D	Male	0.76	8599-0702 JJ	28	22	0.095	0.38	0.71	1.37
	Female		8599-0710 900						

PCB contact			Part numbers
22D	Male	0.76	F1P1P3E-0002AJJ
	Female		F1P1ES3-2202A00

Crimping tools

Contact size	Wire sizes	Type	Locator part number		Plier part number	
			Spec.	SOURIAU	Spec.	SOURIAU
22D	22 to 28	Male	M22520/2-09	8476-09	M22520/2-01	8476-01
		Female	M22520/2-06	8476-06		

Accessories

Insertion & extraction tool

Contact size	Part numbers		Colour	
	Spec.	SOURIAU	Insertion	Extraction
22D	M81969/14-01	-	Green	White

Shrinkable termination detail

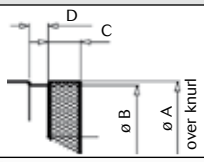

ø A	B±0.05	C±0.05	D±0.05
9.90	9.25 - 9.40	4.20	3.50

Filler plug

Contact size	Part numbers		Colour
	Spec.	SOURIAU	
22D	MS27488-22	8660-212	Black

Metal protective cap

Plug cap
8STA8F06

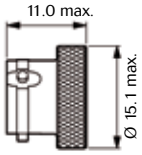

Receptacle cap
8STA9F06

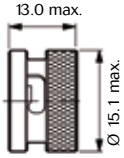

Note : all dimensions are in mm

8STA shell sizes 08 to24

Features & Benefits

- Derived from MIL-DTL-38999 (Eurofighter JN 1003 connector), 8STA connector utilises the extensive SOURIAU range of 38999 medium, high density, power, coaxial and triaxial contact layouts
- Rugged aluminium body to ensure long service life in the harshest environment
- The 8STA range covers connectors from shell sizes 08 to 24 in 5 shell styles:
  . 100% scoop-proof
  . EMI-RFI shielding and shell to shell continuity is provided by conductive plating and integral grounding ring fitting to the plug
  . Environment sealing from interfacial seal and rear grommet (sealing IP67)
  . Positive locking mechanism with locked colour indicator
  . 6 colour-coded keyway orientations
  . Boot termination feature

Technical characteristics

Mechanical

• Shell	Aluminium alloy
• Shell plating	Conductive black zinc
• Insulator	Thermoplastic
• Grommet & seal	Liquid silicone rubber
• Contact	Copper alloy
• Contact plating	Gold
• Endurance	500 matings/unmatings
• Shock	300 g for 3 ms and EIA-364-27
• Vibration	147 m/s2, 10 to 2000 Hz
• Contact retention	Size 22D 45 N
	Size 20 60 N
	Size 16 100 N
	Size 12 100 N
	Size 8 110 N
	Size 4 200 N

Climatic

• Temperature range	-55°C to +175°C
• Sealing mated connectors	IP67 (1 metre for 30 min. minimum)
• Salt spray	48 hours

Electrical

• Test voltage

Service	M	N	I	II
Sea level	1300	1000	1800	2300

• Contact resistance	Size 22D 14.6 mΩ
	Size 20 7.3 mΩ
	Size 16 3.8 mΩ
	Size 12 3.5 mΩ
	Size 8 3 mΩ
	Size 4 2 mΩ
• Insulation resistance	≥ 5000 mΩ (at 500 Vdc)
• Contact rating	Size 22D 5 A
	Size 20 7.5 A
	Size 16 13 A
	Size 12 23 A
	Size 8 45 A
	Size 4 80 A
• Shell continuity	≤10 mΩ

8STA shell sizes 08 to 24

How to order

Connector

Basic series	8STA	0	10	35	P	N	-
Shell style	**0:** Oval flange receptacle **1:** In-line receptacle **2:** Oval flange receptacle with PCB contacts **6:** Plug **7:** Jam nut receptacle						
Shell size	08 - 10 - 12 - 14 - 16 - 18 - 20 - 22 - 24						
Contact layouts	See page 6-8						
Type of contacts	**P:** Pin contacts **S:** Socket contacts						
Orientations	**N:** Red / **A:** Yellow / **B:** Blue / **C:** Orange / **D:** Green / **U:** Universal						
Specification	**- :** Standard version **499:** Integrated nut on the flange - M3 insert (only for shell style 0 & 2) - *for more details, please see page 45-48* **523:** Lighweight In-line receptacle (shell style 1) **022:** Fuel immersible version - *for more details, please see page 53-56*						

Protective cap

Basic series	8STA	8	10
Shell style	**8:** Plug protective cap **9:** Receptacle protective cap		
Shell size	08 - 10 - 12 - 14 - 16 - 18 - 20 - 22 - 24		

Range presentation

Plug

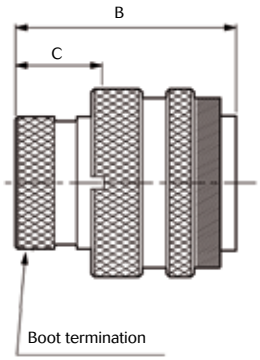

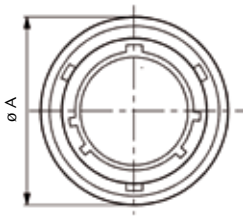

Shell size	ø A max.	B max.	C max.
08	18.70	33.50	15
10	21.50		
12	25.10		
14	29.00		
16	32.20		
18	35.40		
20	38.20		
22	41.30		
24	44.50		

Note : all dimensions are in mm

8STA shell sizes 08 to24

In-line receptacle

Standard version

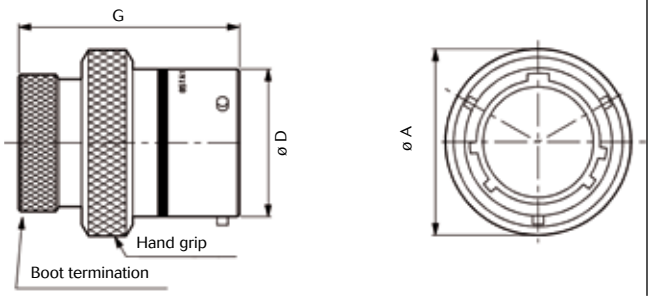

Lightweight version (specification 523)

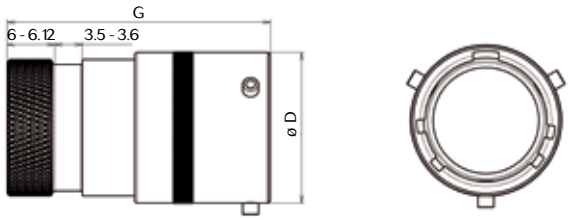

Shell size	ø A max.	ø D $^{+0.20}_{-0.13}$	G max.
08	17.60	12.00	33.50
10	20.70	15.00	
12	25.10	19.05	
14	28.30	22.22	
16	31.40	25.40	
18	34.70	28.57	
20	38.10	31.75	
22	41.20	34.92	
24	44.70	38.10	

Oval flange receptacle

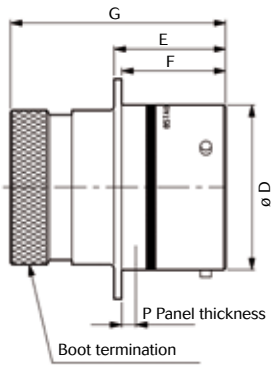

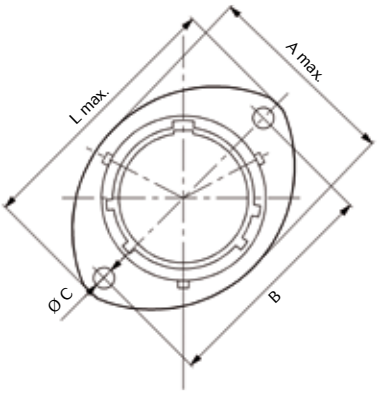

PANEL CUT OUT

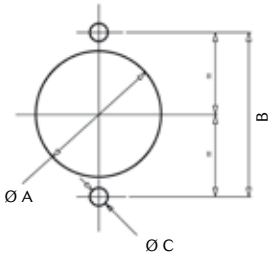

Shell size	A max.	B $^{\pm 0.20}$	ø C $^{0}_{+0.1}$	ø D $^{+0.2}_{-0.13}$	E $^{0}_{+0.15}$	F $^{0}_{-0.13}$	G max.	L max.	P max.	PANEL CUT OUT		
										ø A $^{\pm 0.10}$	B $^{\pm 0.20}$	ø C $^{\pm 0.20}$
08	16.50	21.40	3.20	12.00	17.21	16.05	33.50	27.20	3.00	14.50	21.40	3.60
10	19.50	25.90		15.00				32.00		17.40	25.90	
12	24.00	29.10		19.05				35.20		21.90	29.10	
14	27.00	32.50		22.22				38.40		25.00	32.50	
16	30.30	34.80		25.40				41.00		28.20	34.80	
18	33.70	38.20		28.57				44.70		31.40	38.20	
20	37.00	41.60		31.75		15.29		47.90		34.60	41.60	
22	40.40	45.00		34.90				51.00		37.60	45.00	
24	43.40	49.50	3.77	38.10	18.20			55.80		41.00	49.50	4.10

Note : all dimensions are in mm

8STA shell sizes 08 to 24

Oval flange receptacle with PCB contacts

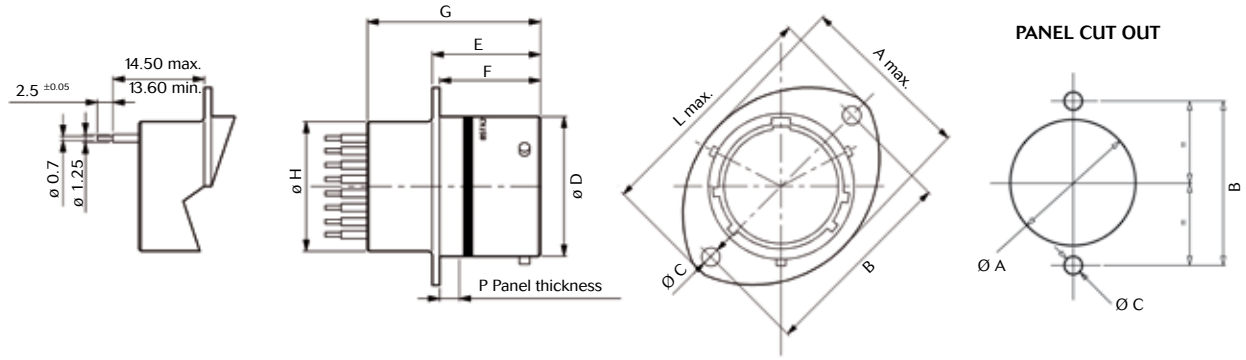

Shell size	A max.	B ±0.20	ø C 0 -0.1	ø D +0.2 -0.13	E 0 -0.15	F 0 -0.13	G max.	ø H max.	L max.	P max.	PANEL CUT OUT		
											ø A ±0.10	B ±0.20	ø C ±0.20
08	16.50	21.40		12.00				11.10	27.20		14.50	21.40	
10	19.50	25.90		14.97				13.90	32.00		17.40	25.90	
12	24.00	29.10		19.05		16.05		17.35	35.20		21.90	29.10	
14	26.90	32.50	3.20	22.22	17.21			20.50	38.40		25.00	32.50	3.60
16	30.30	34.80		25.40			27.65	23.70	41.00	3.00	28.20	34.80	
18	33.70	38.20		28.57				26.91	44.70		31.40	38.20	
20	37.00	41.60		31.77				30.11	47.80		34.60	41.60	
22	40.40	45.00		34.90		15.29		33.20	51.00		37.60	45.00	
24	43.40	49.50	3.77	38.10	18.20			36.40	55.80		41.00	49.50	4.10

Jam nut receptacle

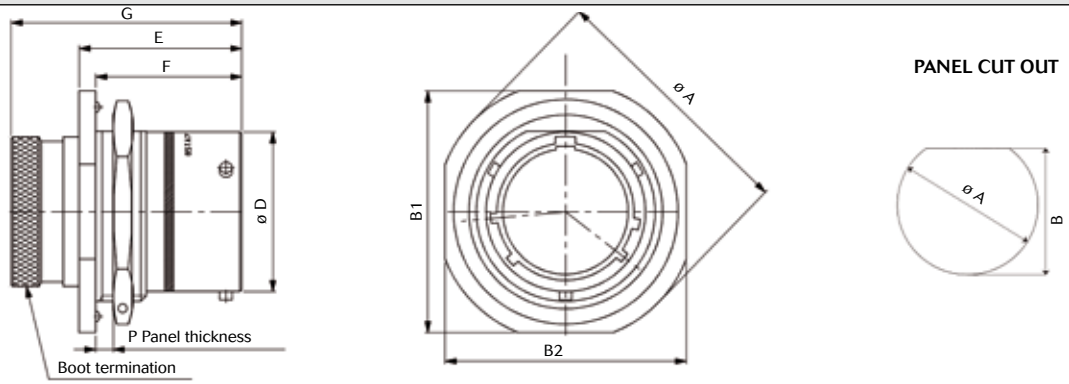

Shell size	ø A ±0.03	B1-B2 ±0.24	ø D 0 -0.12	E ±0.10	F ±0.24	G ±0.3	P max.	PANEL CUT OUT	
								ø A ±0.10	B ±0.20
08	26.90	24.10	11.97					14.50	13.60
10	30.15	27.30	14.94					17.70	16.80
12	34.89	32.10	19.01	25.91		36.71		22.70	20.90
14	38.06	34.92	22.18					25.70	24.10
16	41.25	38.40	25.36		23.24		3.00	28.80	27.20
18	44.41	41.60	28.53					32.00	30.40
20	49.19	46.30	31.71	26.71		37.51		35.10	33.60
22	52.33	49.50	34.88					38.00	36.80
24	55.50	52.45	38.06					42.00	39.90

Note : all dimensions are in mm

8STA shell sizes 08 to24

New versions

Lighweight In-line receptacle (specif. 523)

Version with integrated nut (specif 499)

See pages 45-48

Orientation

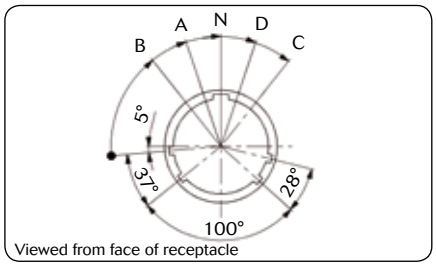

Viewed from face of receptacle

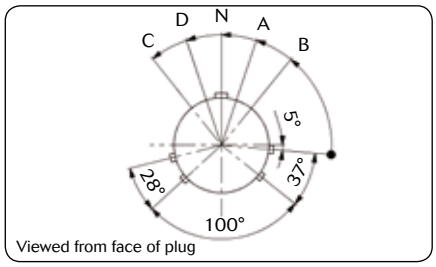

Viewed from face of plug

Shell size	Orientations				
	N Red	A Yellow	B Blue	C Orange	D Green
08	95°	77°	-	-	113°
10	95°	81°	67°	123°	109°
12	95°	75°	63°	127°	116°
14	95°	74°	61°	129°	116°
16	95°	77°	65°	125°	113°
18	95°	77°	65°	125°	113°
20	95°	77°	65°	125°	113°
22	95°	80°	69°	121°	110°
24	95°	80°	69°	121°	110°

For each shell size, U orientation can be mateable with any other orientations.

8STA shell sizes 08 to24

Contacts

Crimped & PCB contacts

Contact size	Contact type	Contact Ø max.	Part numbers	Admissible wire section				External dia. over insulation (mm)	
				AWG		mm²			
Crimp contact				Min.	Max.	Min.	Max.	Min.	Max.
22D signal contact	Male	0.76	8599-0702 JJ	28	22	0.09	0.38	0.76	1.37
	Female		8599-0706 900						
20 signal contact	Male	1.00	8599-0703 SA	24	20	0.21	0.60	1.02	2.11
	Female		8599-0707 900						
16 signal contact	Male	1.60	8599-0704 MJ	20	16	0.60	1.34	1.65	2.77
	Female		8599-0708 900						
16 coaxial contact	Male		M39029/76 424	RG 174 RG 179 RG 316				1.65	2.60
	Female		M39029/77 428						
12 signal contact	Male	2.40	8599-0705 MJ	14	12	1.91	3.18	2.46	3.61
	Female		8599-0709 900						
12 coaxial contact	Male		M39029/28 211	RG 174 RG 179 RG 316				2.40	2.60
	Female		M39029/75 416						
08 power contact	Male	3.64	8599-7544	-	8	-	8.98	4.50	6.50
	Female		8599-7541						
	Boot		8599-4542						
	Reductor**		8599-7645						
08 coaxial contact	Male		M39029/59 366	RG 188A/U				-	2.80
	Female		M39029/60 367						
	Boot		8590-4571						
08 triaxial contact	Male		M39029/90-529	MIL-C 17/176 00002 FILECA F2703/14 RAYCHEM CHEMINAX 10612 FILOTEX M 17/176 00002				3.15	3.40
	Female		M39029/91-530						
	Boot		8590-4571						
04 power contact	Male	5.75	8599-7520A 900	7	10	According to wire used			
	Female		8599-7521A 900						
	Boot		8599-4590						
	Reductor*		8400-2351A						
	Male		8599-7520A 900	4	16				
	Female		8599-7521A 900						
	Boot		8599-4591						

PCB contact***			Part numbers
22D signal contact	Male	0.76	F1P1P3E-0001ALY
	Female		F1P1ES3-2201A00
20 signal contact	Male	1.03	F1P1P3E0020ALY
	Female		F1P1ES32001A00

* Reductor must be used for wire 8 & 10 mm²
** Reductor must be used for wire 8 mm²
*** For shell type 2

Note : all dimensions are in mm

8STA shell sizes 08 to24

Crimping tools

Contact size	Type	Pliers						
		M22520/1-01		M22520/2-01		M300BT	M22520/23-01*	
		Turret Part number		Locator Part number		Locator Part number	Die Part number	Locator Part number
		Spec.	SOURIAU	Spec.	SOURIAU	Spec.	Spec.	Spec.
22D	Male	-	-	M22520/2-09	8476-09	-	-	-
	Female			M22520/2-07	8476-07			
20	Male	M22520/1-04	8365-04	M22520/2-10	8476-10			
	Female							
16	Male			-	-			
	Female							
12	Male							
	Female							
8	Male	-	-			SP 593	M22520/23-02	8599-9601
	Female							
4	Male					-	M22520/23-04	M22520/23-11
	Female							

* Pneumatic pliers

M22520/1-01+ M22520/1-04

M22520/2-01 + M22520/2-09 & M22520/2-07

M22520/23-01

Wire stripping

	Contact size						
	26	22D	20	16	12	8	4
L (mm)	4		6			12	

Note : all dimensions are in mm

8STA shell sizes 08 to24

Accessories

Shrinkable termination detail

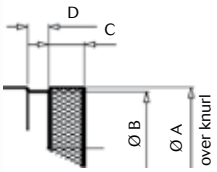

Shell size	øA	ø B±0.05	C±0.05	D
08	10.62	9.70	6	3.5
10	13.72	12.65		
12	17.26	16.02		
14	20.41	19.00		
16	23.60	22.23		
18	26.76	25.22		
20	29.93	28.37		
22	33.11	31.86		
24	36.30	34.67		

Metal protective caps

Plug cap
Type 8

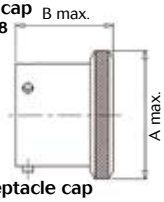

Receptacle cap
Type 9

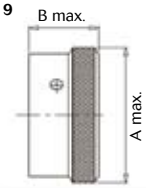

Shell size	Plug cap		Receptacle cap	
	ø A	B	øA	ø B
08	17.50	21.00	19.00	14.20
10	20.50		21.80	
12	24.50		26.10	
14	27.70		29.30	
16	30.90		32.50	15.00
18	34.00		35.30	
20	37.20		38.80	
22	40.40		42.00	
24	43.50		45.10	15.85

Insertion & extraction tools

Contact size	Material	Part numbers		Colour	
		Spec.	SOURIAU	Insertion	Extraction
22D	Plastic	M81969/14-01	-	Green	White
20	Plastic	M81969/14-10	-	Red	Orange
16	Plastic	M81969/14-03	-	Blue	White
12	Plastic	M81969/14-04	-	Yellow	
8	Plastic	M81969/14-06	-	-	Red
	Metallic	-	8660-197		-
4	Plastic	M81969/14-07	-	-	Blue
	Metallic	-	8533-8175		-

Filler plug

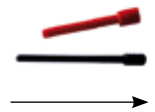

Direction of insertion

Contact size	Part numbers		Colour
	Spec.	SOURIAU	
22D	MS27488-22	8660-212	Black
20	MS27488-20	8522-389A	Red
16	MS27488-16	8522-390A	Blue
12	MS27488-12	8522-391A	Yellow

Note : all dimensions are in mm

8STA High Density

Features & Benefits

- **A reliable & robust solution**
  - Same well proven shell design as standard 8STA
  - Contact retention with metallic clip
- **Significant space saving**
  - Twice the number of contacts compared to size 12-35 with 22 contacts
  - Two shell sizes smaller than a partially populated size 16-35 with 55 cavities

Technical characteristics

Mechanical

• Shell	Aluminium alloy
• Shell plating	Conductive black zinc
• Insulator	Thermoplastic
• Grommet & seal	Liquid silicone rubber
• Contact	Copper alloy
• Contact plating	Gold
• Endurance	500 matings/unmatings
• Vibration	-15 to -20g, 100 to 3000 Hz
• Contact retention	35 N

Electrical

• Test voltage	500 Vrms
• Contact resistance	16mΩ
• Insulation resistance	≥ 5000 mΩ (at 500 Vdc)
• Contact rating	3 A
• Shell continuity	≤10 mΩ

Climatic

• Temperature range	-55°C to +175°C
• Sealing mated connectors	IP67 (1 metre for 30 min. minimum)
• Salt spray	48 hours

8STA High Density

How to order

Connector

Basic series		**8STA**	**0**	**12**	**43**	**P**	**N**	**-**
Shell style	**0:** Oval flange receptacle **1:** In-line receptacle **2:** Oval flange receptacle with PCB contacts **6:** Plug **7:** Jam nut receptacle							
Shell size	12							
Contact layouts	43 (43 contacts #26)							
Type of contacts	**P:** Pin contacts **S:** Socket contacts							
Orientations	**N:** Red / **A:** Yellow / **B:** Blue / **C:** Orange / **D:** Green / **U:** Universal							
Specification	**- :** Standard version **499:** Integrated nut on the flange - M3 insert (only for shell style 0 & 2)- *for more details, please see page 45-48* **523:** Lighweight In-line receptacle (shell style 1)							

Protective cap

Basic series		**8STA**	**8**	**12**
Shell style	**8:** Plug protective cap **9:** Receptacle protective cap			
Shell size	12			

Range presentation

Plug

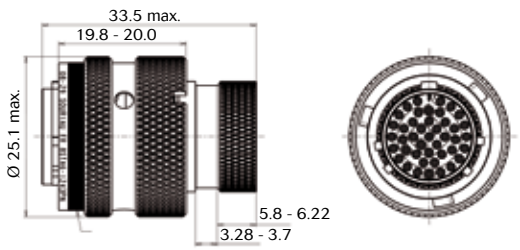

In-line receptacle

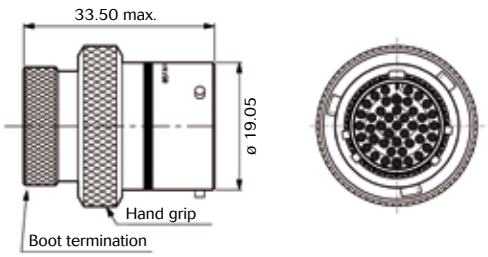

Note : all dimensions are in mm

8STA High Density

Oval flange receptacle

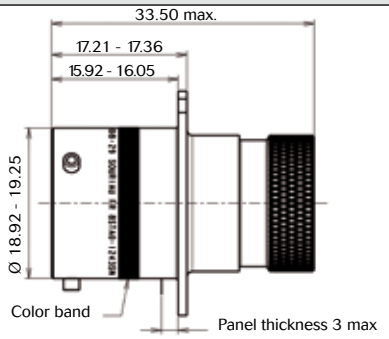

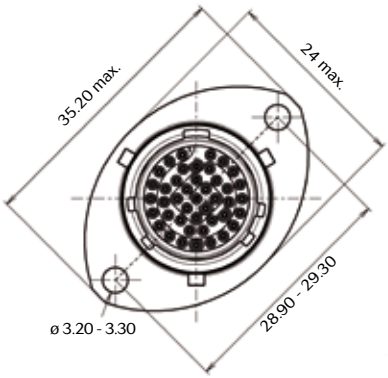

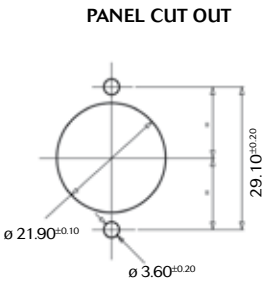

Oval flange receptacle with PCB contacts

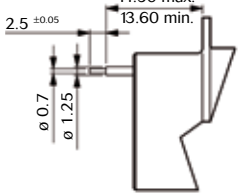

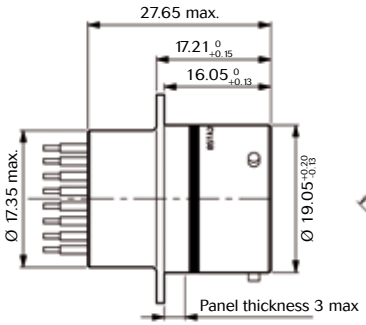

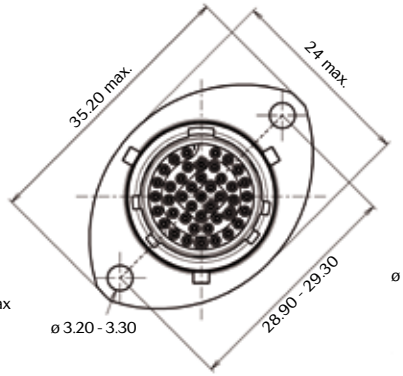

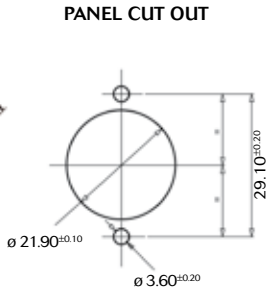

Jam nut receptacle

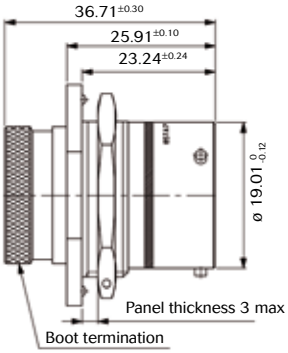

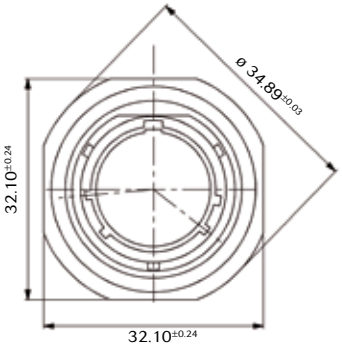

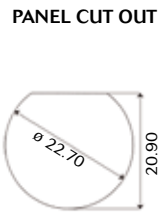

Notes

www.motorsport-connectors.com

8STA Power

Features & Benefits

- **A wide power & mixed power/signal offer**
  - 6 power layouts with contacts gauge 4 and gauge 8
  - 6 mixed power/signal layouts
- **Space & cost saving with mixed connectors**
  - Only one connector instead of 2 to transmit signal & power

Technical characteristics

Mechanical

• Shell	Aluminium alloy
• Shell plating	Conductive black zinc
• Insulator	Thermoplastic
• Grommet & seal	Liquid silicone rubber
• Contact	Copper alloy
• Contact plating	Gold
• Endurance	500 matings/unmatings
• Shock	300 g for 3 ms and EIA-364-27
• Vibration	147 m/s2, 10 to 2000 Hz
• Contact retention	Size 22D 45 N
	Size 20 60 N
	Size 16 100 N
	Size 12 100 N
	Size 8 110 N
	Size 4 200 N

Climatic

• Temperature range	-55°C to +175°C
• Sealing mated connectors	IP67 (1 metre for 30 min. minimum)
• Salt spray	48 hours

Electrical

• Test voltage

Service	M	N	I	II
Sea level	1300	1000	1800	2300

• Contact resistance	Size 22D 14.6 mΩ
	Size 20 7.3 mΩ
	Size 16 3.8 mΩ
	Size 12 3.5 mΩ
	Size 8 3 mΩ
	Size 4 2 mΩ
• Insulation resistance	≥ 5000 mΩ (at 500 Vdc)
• Contact rating	Size 22D 5 A
	Size 20 7.5 A
	Size 16 13 A
	Size 12 23 A
	Size 8 45 A
	Size 4 80 A
• Shell continuity	≤10 mΩ

8STA Power

How to order

Connector

Basic series	8STA	0	10	35	P	N	-
Shell style	**0:** Oval flange receptacle (for front or rear mounting) **1:** In-line receptacle **6:** Plug **7:** Jam nut receptacle						
Shell size	10 - 12 - 16 - 18 - 20 - 24						
Contact layouts	See page 6-8						
Type of contacts	**P:** Pin contacts **S:** Socket contacts						
Orientations	**N:** Red / **A:** Yellow / **B:** Blue / **C:** Orange / **D:** Green / **U:** Universal						
Specification	**- :** for contact layouts 20-48 & 24-44 **251:** for contact layouts 10-80, 16-02, 16-75, 18-18, 20-75, 20-78, 24-07, 24-41 & 24-46 **261:** only for 12-01						

Protective cap

Basic series	8STA	8	10
Shell style	**8:** Plug protective cap **9:** Receptacle protective cap		
Shell size	10 - 12 - 16 - 18 - 20 - 24		

Range presentation

Power connectors

8STA 10-80 specif. 251 - *1 contact #8 power*

8STA 12-01 specif.261 - *1 contact #4 power*

8STA 16-75 specif. 251 - *2 contacts #8 power*

8STA 20-48 - *4 contacts #8 power*

8STA Power

Mixed signal & power connectors

8STA 16-02 specif.251 - *1 contact #8 power & 38 #22D*

8STA 24-07 specif. 251 - *2 contacts #8 power & 97 #22D*

8STA 24-44 - *4 contacts # 4 power & 4 #16*

8STA 24-46 specif.251 - *2 contacts #8 power, 4 #16 & 40 #20*

8STA Power

Plug

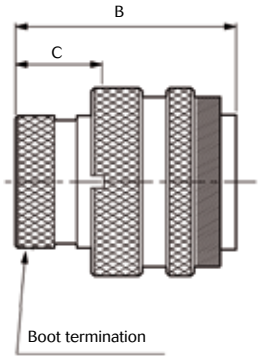

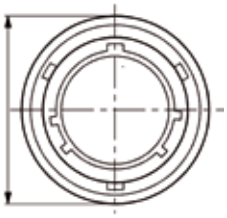

Shell size	ø A max.	B max.	C max.
10	21.50	33.50	15
12	25.10		
16	32.20		
18	35.40		
20	38.20		
24	44.50		

In-line receptacle

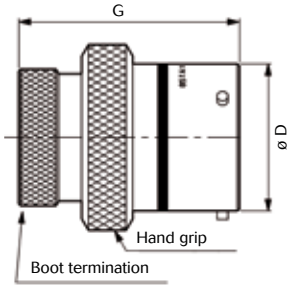

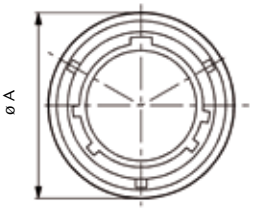

Shell size	ø A max.	ø D $^{+0.20}_{-0.13}$	G max.
10	20.70	15.00	33.50
12	25.10	19.05	
16	31.40	25.40	
18	34.70	28.57	
20	38.10	31.75	
24	44.70	38.10	

Oval flange receptacle

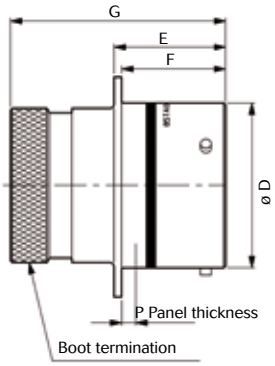

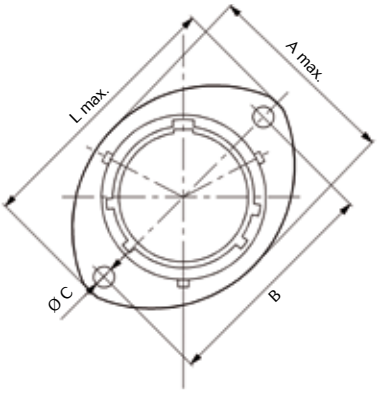

PANEL CUT OUT

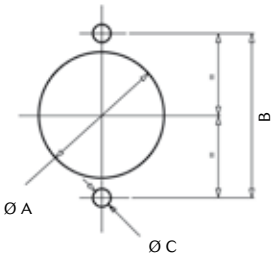

Shell size	A max.	B $^{\pm 0.20}$	ø C $^{0}_{+0.1}$	ø D $^{+0.2}_{-0.13}$	E $^{0}_{+0.15}$	F $^{0}_{-0.13}$	G max.	L max.	P max.	PANEL CUT OUT		
										ø A $^{\pm 0.10}$	B $^{\pm 0.20}$	ø C $^{\pm 0.20}$
10	19.50	25.90	3.20	15.00	17.21	16.05	33.50	32.00	3.00	17.40	25.90	3.60
12	24.00	29.10		19.05				35.20		21.90	29.10	
16	30.30	34.80		25.40				41.00		28.20	34.80	
18	33.70	38.20		28.57				44.70		31.40	38.20	
20	37.00	41.60		31.75		15.29		47.90		34.60	41.60	
24	43.40	49.50	3.77	38.10	18.20			55.80		41.00	49.50	4.10

Note : all dimensions are in mm

8STA Power

Jam nut receptacle

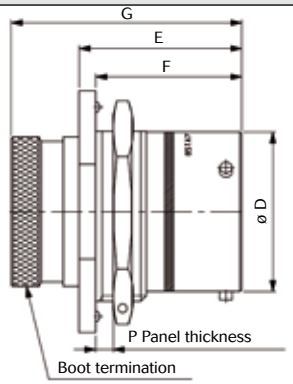

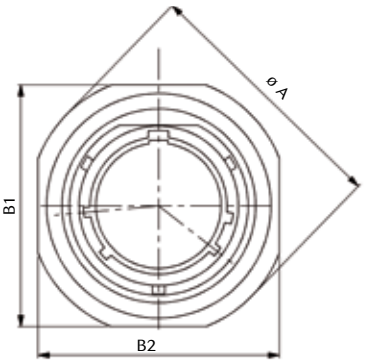

PANEL CUT OUT

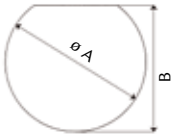

Shell size	ø A $^{\pm 0.03}$	B1-B2 $^{\pm 0.24}$	ø D $^{0}_{-0.12}$	E $^{\pm 0.10}$	F $^{\pm 0.24}$	G $^{\pm 0.3}$	P max.	PANEL CUT OUT	
								ø A $^{\pm 0.10}$	B $^{\pm 0.20}$
10	30.15	27.30	14.94	25.91	23.24	36.71	3.00	17.70	16.80
12	34.89	32.10	19.01					22.70	20.90
16	41.25	38.40	25.36					28.80	27.20
18	44.41	41.60	28.53	26.71		37.51		32.00	30.40
20	49.19	46.30	31.71					35.10	33.60
24	55.50	52.45	38.06					42.00	39.90

Orientation

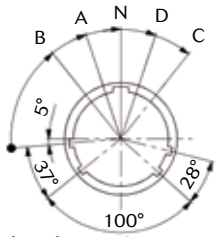

Viewed from face of receptacle

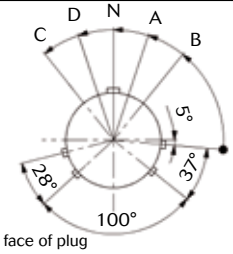

Viewed from face of plug

Shell size	Orientations				
	N Red	A Yellow	B Blue	C Orange	D Green
10	95°	81°	67°	123°	109°
12	95°	75°	63°	127°	116°
16	95°	77°	65°	125°	113°
20	95°	77°	65°	125°	113°
24	95°	80°	69°	121°	110°

For each shell size, U orientation can be mateable with any other orientations.

Note : all dimensions are in mm

8STA Power

Contacts

Crimped contacts

Contact size	Contact type	Contact Ø max.	Part numbers	Admissible wire section				External dia. over insulation (mm)	
				AWG		mm²			
Crimp contact				Min.	Max.	Min.	Max.	Min.	Max.
22D signal contact	Male	0.76	8599-0702 JJ	28	22	0.09	0.38	0.76	1.37
	Female		8599-0706 900						
20 signal contact	Male	1.00	8599-0703 SA	24	20	0.21	0.60	1.02	2.11
	Female		8599-0707 900						
16 signal contact	Male	1.60	8599-0704 MJ	20	16	0.60	1.34	1.65	2.77
	Female		8599-0708 900						
08 power contact	Male	3.64	8599-7544	-	8	-	8.98	4.50	6.50
	Female		8599-7541						
	Boot		8599-4542						
	Reductor**		8599-7645						
04 power contact	Male	5.75	8599-7520A 900	7	10	According to wire used			
	Female		8599-7521A 900						
	Boot		8599-4590						
	Reductor*		8400-2351A						
	Male		8599-7520A 900	4	16				
	Female		8599-7521A 900						
	Boot		8599-4591						

* Reductor must be used for wire 8 & 10 mm² / ** Reductor must be used for wire 8 mm²

Crimping tools

Contact size	Type	Pliers						
		M22520/1-01		M22520/2-01		M300BT	M22520/23-01*	
		Turret Part number		Locator Part number		Locator Part number	Die Part number	Locator Part number
		Spec.	SOURIAU	Spec.	SOURIAU			
22D	Male	-	-	M22520/2-09	8476-09	-	-	-
	Female			M22520/2-07	8476-07			
20	Male	M22520/1-04	8365-04	M22520/2-10	8476-10			
	Female							
16	Male			-	-			
	Female							
8	Male	-	-			SP 593	M22520/23-02	8599-9601
	Female							
4	Male					-	M22520/23-04	M22520/23-11
	Female							

* Pneumatic pliers

Note : all dimensions are in mm

8STA Power

Wire stripping

	Contact size				
	22D	20	16	8	4
L (mm)	4	6		12	

Accessories

Shrinkable termination detail

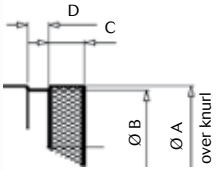

Shell size	øA	ø B±0.05	C±0.05	D
10	13.72	12.65	6	3.5
12	17.26	16.02		
16	23.60	22.23		
18	26.76	25.22		
20	29.93	28.37		
24	36.30	34.67		

Insertion & extraction tools

Contact size	Material	Part numbers		Colour	
		Spec.	SOURIAU	Insertion	Extraction
22D	Plastic	M81969/14-01	-	Green	White
20	Plastic	M81969/14-10	-	Red	Orange
16	Plastic	M81969/14-03	-	Blue	White
8	Plastic	M81969/14-06	-	-	Red
	Metallic	-	8660-197		-
4	Plastic	M81969/14-07	-	-	Blue
	Metallic	-	8533-8175		-

Note : all dimensions are in mm

Notes

www.motorsport-connectors.com

8STA Integrated Clinchnut

Features & Benefits

A reliable solution
- Same nut design & material as standard nut plates

A convenient & time saving feature
Weight saving opportunities
- Elimination of nut plates

SOURIAU's Offer
- 12 shell sizes available, from 02 to 24
- Available for standard crimp receptacles (shell style 0) & PCB receptacles (shell style 2)

Respect for environment
- RoHS compliant

Current solution:

Connector + Nut plate

NEW solution:

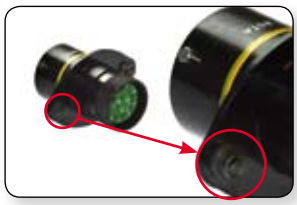

Integrated clinchnut on the flange

Technical characteristics

Mechanical

• Shell	Aluminium alloy
• Shell plating	Conductive black zinc
• Insulator	Thermoplastic
• Grommet & seal	Liquid silicone rubber
• Contact	Copper alloy
• Contact plating	Gold over nickel
• Endurance	500 matings/unmatings
• Shock resistance	300 g for 3 ms and EIA-364-27
• Vibration resistance	147 m/s2, 10 to 2000 Hz
• Contact retention	Size 26 35 N
	Size 22D 45 N
	Size 20 60 N
	Size 16 100 N
	Size 12 100 N
	Size 8 110 N
	Size 4 200 N

Electrical

Please see details in each section concerned

Climatic

• Temperature range	-55°C to +175°C
• Sealing mated connectors	IP67 (1 metre for 30 min. minimum)
• Salt spray	48 hours

8STA Integrated Clinchnut

How to order

Basic series	8STA	0	10	35	P	N	-
Shell style	**0:** Oval flange receptacle **2:** Oval flange receptacle with PCB contacts						
Shell size	02 - 04 - 06 - 08 - 10 - 12 - 14 - 16 - 18 - 20 - 22 - 24						
Contact layouts	all contact layouts - see page 6-8						
Type of contacts	**P:** Pin contacts **S:** Socket contacts						
Orientations	**N:** Red / **A:** Yellow / **B:** Blue / **C:** Orange / **D:** Green / **U:** Universal						
Specification*	**499:** Integrated nut on the flange - M2 insert for sizes 02 & 04 / M3 insert for sizes 08 to 24 **528:** Integrated nut on the flange - M2.5 insert for sizes 02 to 06						

** Mandatory*

Range presentation

Oval flange receptacle

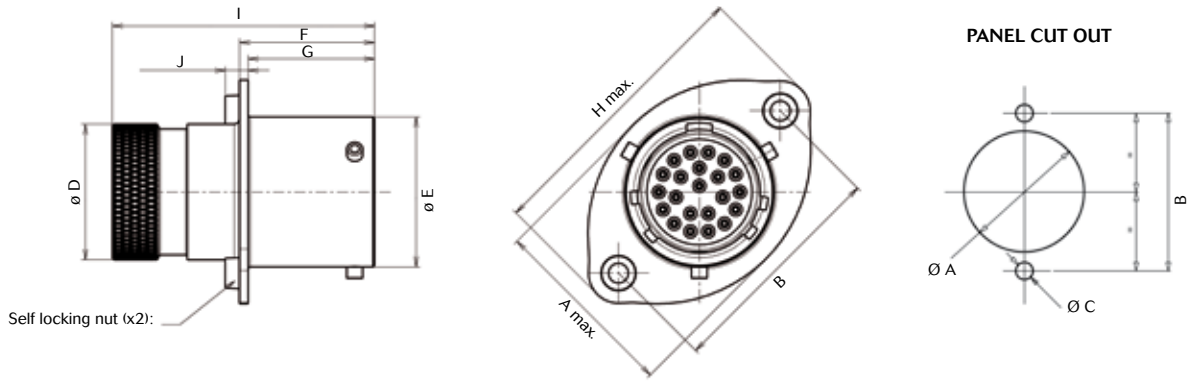

Shell size	A max.	B ±0.20	ø D	ø E	F	G	H	I	J	PANEL CUT OUT ø A ±0.10	PANEL CUT OUT B ±0.20	PANEL CUT OUT ø C ±0.20
02	10.50	15.4	7.20	8.30	10.15	8.80	21.4	16.30	3.22	9.30	15.30	3.10
04	13.2	16.4	8.6	10.2	10.7	9.2	22.3	18.30	3.37	12.00	16.20	
06	15.0	18.2	10.35	12.0	12.95	10.95	24.0	23.25	3.83	13.00	18.00	
08	16.50	21.40	10.62	12.00	17.21	16.05	29.25	33.4	3.32	14.50	21.40	3.60
10	19.50	25.90	13.72	15.00			33.75			17.40	25.90	
12	24.00	29.10	17.26	19.05			36.95			21.90	29.10	
14	27.00	32.50	20.41	22.22			40.35			25.00	32.50	
16	30.30	34.80	23.60	25.40			42.65			28.20	34.80	
18	33.70	38.20	26.76	28.57			46.05			31.40	38.20	
20	37.00	41.60	29.93	31.75		15.29	49.45			34.60	41.60	
22	40.40	45.00	33.11	34.90			52.85			37.60	45.00	
24	43.40	49.50	36.30	38.10	18.20		57.35			41.00	49.50	4.10

Note : all dimensions are in mm

8STA Integrated Clinchnut

Oval flange receptacle with PCB contacts

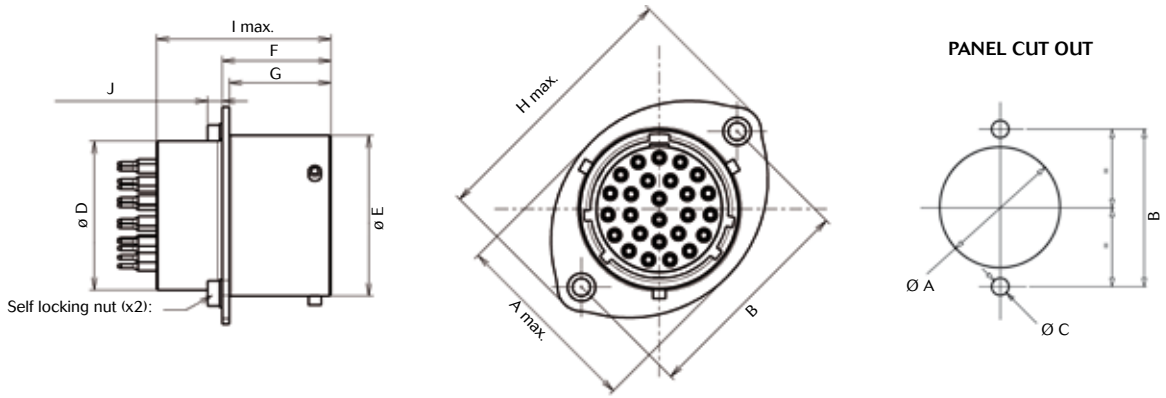

Shell size	A max.	B ±0.20	ø D max.	E	F	G	H max.	I max.	J	PANEL CUT OUT		
										ø A ±0.10	B ±0.20	ø C ±0.20
02	10.5	15.3	7.2	8.3	10.15	8.8	21.3	17.5	2.05	9.30	15.30	3.10
04	13.2	16.4	8.6	10.2	10.7	9.2	22.2	18.3		12.00	16.20	
06	15.0	18.2	10.35	12.0	12.95	10.95	24.0	23.25		13.00	18.00	
08	16.50	21.40	11.10	12.00	17.21	16.05	42.40	27.65	2.72	14.50	21.40	3.60
10	19.50	25.90	13.90	14.87						17.40	25.90	
12	24.00	29.10	17.35	19.05						21.90	29.10	
14	27.00	32.50	20.50	22.22						25.00	32.50	
16	30.30	34.80	23.70	25.40						28.20	34.80	
18	33.70	38.20	26.91	28.57						31.40	38.20	
20	37.00	41.60	30.11	31.77		15.29				34.60	41.60	
22	40.40	45.00	33.20	34.90						37.60	45.00	
24	43.40	49.50	36.40	38.10	18.20					41.00	49.50	4.10

For gaskets, please see page 63 in Accessories section.

Note : all dimensions are in mm

Notes

www.motorsport-connectors.com

8STA Hermetic shell size 02

Features & Benefits

- **The smallest hermetic circular 5 way PC tail connector on the market**
- **Lightweight 8STA connector**
  - Miniaturisation
  - Weight: 3 grammes
- **Suitable for welding directly to sensor bodies**
  - Designed for weld fixing
- **Excellent corrosion resistance**
  - Stainless steel body
- **Excellent hermeticity**
  - Hermetic glass bead (1.10^{-7} cm^3/s)
- **Intermateable with standard 8STA plug size 02-05**
  - Standard plug 02-05
- **Easy identification with colour coded bands**
  - 7 **visual** keyway orientations
- **Rapid & secure locking system with audible click**
  - Bayonet connector

Technical characteristics

Mechanical

• Shell	Stainless steel
• Shell plating	Passivated
• Insulator	Glass bead
• Contact	Iron-Nickel (NiFe2)
• Contact plating	Nickel
• Endurance	500 matings/unmatings
• Shock resistance	300 g for 3 ms and EIA-364-27
• Vibration resistance	10 to 2000 Hz 30g

Electrical

• Test voltage	400 V (sea level)
• Contact resistance	2 mΩ
• Insulation resistance	≥ 5000 MΩ (at 500 Vdc)
• Contact rating	1.5 A

Climatic

• Temperature range	-55°C to +175°C
• Sealing mated connectors	IP67 (1 metre for 30 min. minimum)
• Salt spray	48 hours
• Hermeticity	$1.10^{-7}CM^3/S$

8STA Hermetic shell size 02

How to order

Basic series	8STA	1	y	02	05	P	N	170
Shell style	**1:** In-line connector							
Class	**y:** Hermetic version							
Shell size	**02**							
Layout	**05** (5 straight spill contacts #26)							
Contact gender	**P:** Pin contacts							
Orientation	**N:** Red / **A:** Yellow / **B:** Blue / **C:** Orange / **D:** Green / **E:** Grey / **U:** Universal							
Specification*	**170**							

** Mandatory*

Range presentation

In-line receptacle

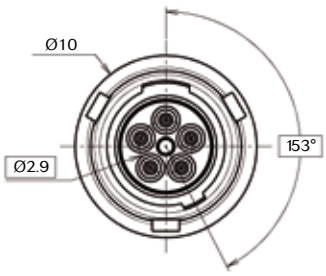

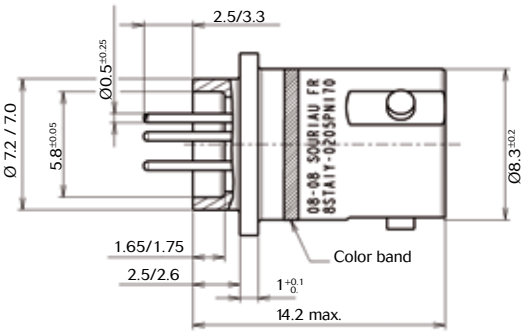

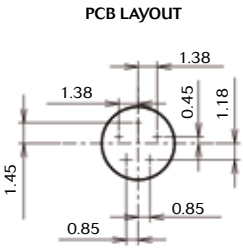

Note : all dimensions are in mm

8STA Hermetic Fuel Tank

Features & Benefits

- **Hermetically sealed connector - 1.10^{-7} cm^3/s @ 15PSI**
- **Withstands pressure differential without loss of electrical performances**
  - Glass to metal insert
- **Excellent resistance to racing fuels & fluids**
  - Viton® interfacial seal
- **Excellent corrosion resistance**
  - Stainless steel material
- **Low profile design for heat shrink boot & cost effective connector**
  - Integrated backshell

Technical characteristics

Mechanical

• Shell	Stainless steel
• Shell plating	Passivated
• Insulator	Glass bead
• Contact	Nickel Iron
• Contact plating	Gold
• Endurance	500 matings/unmatings
• Shock resistance	300 g for 3 ms and EIA-364-27
• Vibration resistance	10 to 2000 Hz 30g

Electrical

• Test voltage	1800 V / Service I (sea level)
• Contact resistance	2 mΩ
• Insulation resistance	≥ 5000 MΩ (at 500 Vdc)
• Contact rating	Size 16: 10 A Size 20: 5 A

Climatic

• Temperature range	-55°C to +175°C
• Sealing mated connectors	IP67 (1 metre for 30 min. minimum)
• Salt spray	48 hours
• Hermeticity	$1.10^{-7} cm^3/S$

8STA Hermetic Fuel Tank

How to order

Basic series		8STA	7	y	10	98	P	N	022
Shell style	**7:** Jam nut receptacle								
Class	**y:** Hermetic version								
Shell size	10 - 12 - 14								
Layouts	See layouts available below								
Contact gender	**P:** Pin contacts								
Orientation	**N:** Red / **A:** Yellow / **D:** Green								
Specification*	**022:** Fuel immersible version								

** Mandatory*

Contact layouts

Size 10

98

6 #20
Service I

Size 12

04

4 #16
Service I

98

10 #20
Service I

Size 14

97

4 #16
8 #20
Service I

Range presentation

Jam nut receptacle

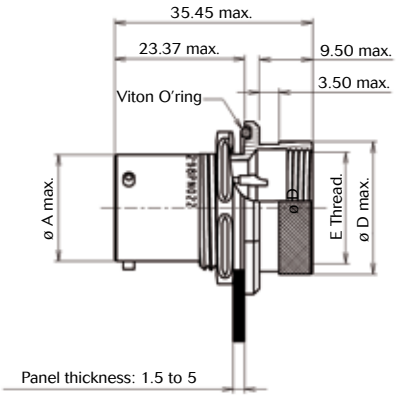

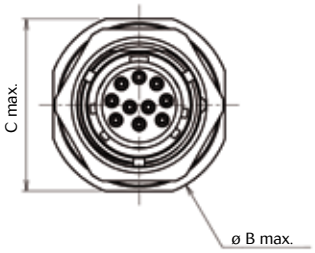

PANEL CUT OUT

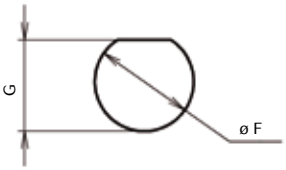

Shell size	ø A max.	ø B max.	C max.	ø D max.	E Thread	PANEL CUT OUT	
						ø F ±0.10	G ±0.20
10	15.04	28.40	25.95	**20.50**	**M18 x 1**	17.70	16.80
12	19.09	33.00	30.75	**23.67**	**M21 x 1**	22.70	20.90
14	22.26	36.30	33.85	**26.84**	**M24 x 1**	25.70	24.10

Note : all dimensions are in mm

8STA/8TA Fuel Immersible

Features & Benefits

- **Continuous immersion without loss of performance**
  - Special fuel resistant insert
- **Excellent connector sealing on panels by using the jam nut version**

Technical characteristics

Mechanical	8STA	8TA
• Shell	Aluminium alloy	
• Shell plating	Conductive black zinc	
• Insulator	Thermoplastic	
• Grommet & seal	Fluoroelastomer	
• Contact	Copper alloy	
• Contact plating	Gold	
• Endurance	500 matings/unmatings	
• Shock	300 g for 3 ms and EIA-364-27	
• Vibration	147 m/s2, 10 to 2000 Hz	random 100 to 1000 Hz - 1G²/Hz
• Contact retention	Size 22D: 45 N / Size 20: 60 N Size 16: 100 N / Size 12: 100 N	Size 22D: 45 N
Electrical		
• Test voltage	1300 Vrms	
• Contact resistance	Size 22D: 14.6 mΩ / Size 20: 7.3 mΩ Size 16: 3.8 mΩ / Size 12: 3.5 mΩ	Size 22D: 14.6 mΩ
• Insulation resistance at 500 Vdc	≥ 5000 mΩ	
• Contact rating	Size 22D: 5 A / Size 20: 7.5 A Size 16: 13 A / Size 12: 23 A	Size 22D: 5 A
• Shell continuity	≤10 mΩ	
Climatic		
• Temperature range	-55°C to +175°C	
• Sealing mated connectors	IP67 (1 metre for 30 min. minimum)	
• Salt spray	48 hours	
Resistance to fluids	withstands most of Motorsport fluids	

8STA/8TA Fuel Immersible

How to order

Basci series		**8STA** **8TA**	**0** **0**	**08** **08**	**35** **35**	**P** **P**	**N** **N**	**022** **022**
Shell style	**0:** Oval flange receptacle **1:** In-line receptacle **6:** Plug **7:** Jam nut receptacle							
Shell size	04 - 08 - 10 - 12 - 14 - 16							
Layouts	See layouts available below							
Contact gender	**P:** Pin contacts **S:** Socket contacts							
Orientation	**N:** Red / **A:** Yellow / **D:** Green							
Specification*	**022**							

** Mandatory*

Contact layouts

Size 04

05

5 #26
Service R

35

3 #22D
Service S

Size 08

35

6 #22D
Service M

98

3 #20
Service I

Size 10

05

5 #20
Service I

35

13 #22D
Service M

98

6 #20
Service I

Size 12

98

10 #20
Service I

Size 14

35

37 #22D
Service M

Size 16

08

8 #16
Service II

For both 8STA & 8TA, all others being for 8STA only.

8STA/8TA Fuel Immersible

Range presentation

Plug

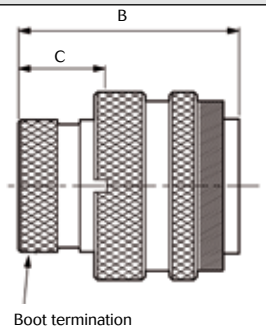

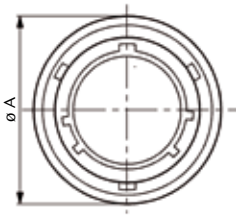

Shell size	ø A max.	B max.	C max.
04	13.55	18.50	7.9
08	18.70	33.50	15
10	21.50		
12	25.10		
14	29.00		
16	32.20		

In-line receptacle

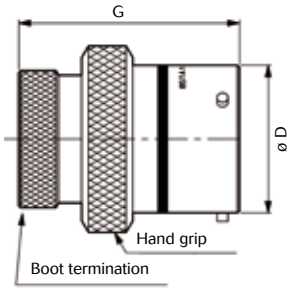

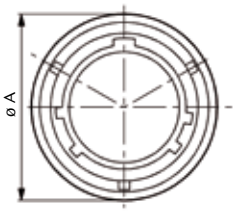

Shell size	ø A max.	ø D $^{+0.20}$	G max.
04	-	10.20	18.15
08	17.60	12.00	33.50
10	20.70	15.00	
12	25.10	19.05	
14	28.30	22.22	
16	31.40	25.40	

Oval flange receptacle

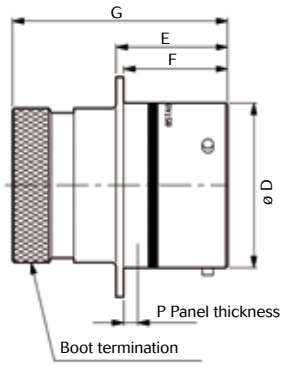

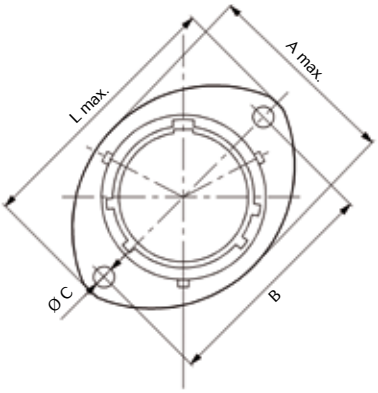

PANEL CUT OUT

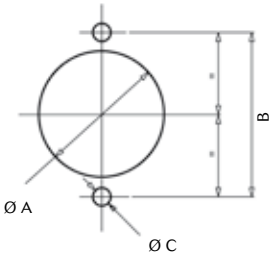

Shell size	A max.	B $^{\pm 0.20}$	ø C $^{+0.1}_{0}$	ø D $^{+0.2}_{-0.13}$	E $^{0}_{+0.15}$	F $^{0}_{-0.13}$	G max.	L max.	P max.	PANEL CUT OUT		
										ø A $^{\pm 0.10}$	B $^{\pm 0.20}$	ø C $^{\pm 0.20}$
04	13.20	16.40	2.65	10.20	10.70	9.20	18.30	20.85	2.00	12.00	16.20	3.10
08	16.50	21.40	3.20	12.00	17.21	16.05	33.50	27.20	3.00	14.50	21.40	3.60
10	19.50	25.90		15.00				32.00		17.40	25.90	
12	24.00	29.10		19.05				35.20		21.90	29.10	
14	27.00	32.50		22.22				38.40		25.00	32.50	
16	30.30	34.80		25.40				41.00		28.20	34.80	

Note : all dimensions are in mm

8STA/8TA Fuel Immersible

Jam nut receptacle

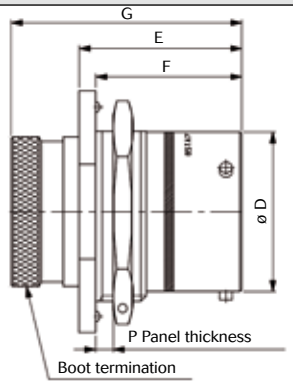

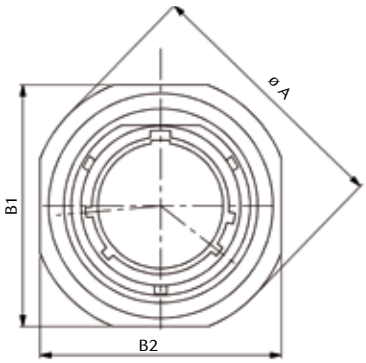

PANEL CUT OUT

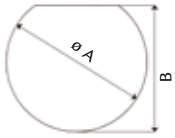

Shell size	ø A$^{\pm 0.03}$	B1-B2$^{\pm 0.24}$	ø D$^{0}_{-0.12}$	E$^{\pm 0.10}$	F$^{\pm 0.24}$	G$^{\pm 0.3}$	P max.	PANEL CUT OUT	
								ø A $^{\pm 0.10}$	B $^{\pm 0.20}$
04	18.00	20.20	10.20	18.15	16.20	25.75	1.5 to 5.0	13.50	12.80 - 13.00
08	26.90	24.10	11.97	25.91	23.24	36.71	3.00	14.50	13.60
10	30.15	27.30	14.94					17.70	16.80
12	34.89	32.10	19.01					22.70	20.90
14	38.06	34.92	22.18					25.70	24.10
16	41.25	38.40	25.36					28.80	27.20

For other shell sizes, please consult us.

Note : all dimensions are in mm

8STA Through Bulkhead

Features & Benefits

- **Easy mating/unmating on both sides of the bulkhead**

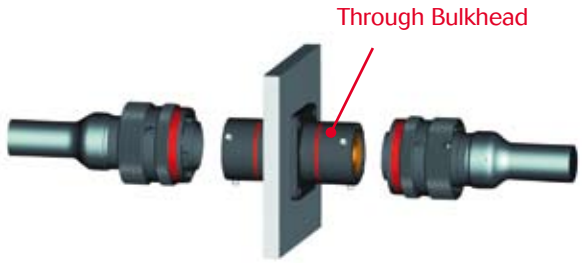

- **Significant time saving advantage over conventional plugs & receptacles**
  - «Double receptacle» mounted on panel
- **The smallest single way power through bulkhead connector on the market**
  - Male / female single way power contact #4 in a shell size 12
- **Easy identification with colour coded bands**
  - 5 visual keyway orientations
- **Simplified connection through a bulkhead, eliminating hard wiring to the panel on one side**
- **Simplifies maintenance procedures having a detachable connector on each side of the bulkhead**

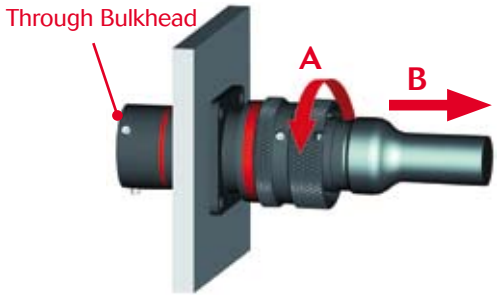

- **Ideal for external use (dust, water etc.)**
  - IP67 (Interfacial & mating seals)
- **RoHS compliant**
  - Respect for environment

Technical characteristics

Mechanical

• Shell	Aluminium alloy
• Shell plating	Conductive black zinc
• Insulator	Thermoplastic
• Grommet & seal	Liquid silicone rubber
• Contact	Copper alloy
• Contact plating	Gold over nickel
• Endurance	500 matings/unmatings
• Shock resistance	300 g for 3 ms and EIA-364-27
• Vibration resistance	147 m/s2, 10 to 2000 Hz
• Contact retention	200 N

Electrical

• Test voltage	1300 Vrms (sea level)
• Contact resistance	2 mΩ
• Insulation resistance	≥ 5000 MΩ (at 500 Vdc)
• Contact rating	125 A (continuous)

Climatic

• Temperature range	-55°C to +175°C
• Sealing mated connectors	IP67 (1 metre for 30 min. minimum)
• Salt spray	48 hours

8STA Through Bulkhead

How to order

Basic series		**8STA**	**0**	**12**	**01**	**PS**	**N**	**500**
Shell style	**0:** Receptacle							
Shell size	12							
Layout	01 (1 power contact #4)							
Type of contact	**P S**: Pin + Socket contacts							
Orientation	**N:** Red / **A:** Yellow / **B:** Blue / **C:** Orange / **D:** Green / **U:** Universal							
Specification*	**500**: Through Bulkhead connector							

** Mandatory / Please consult us for other sizes & layouts*

Range presentation

Through Bulkhead receptacle

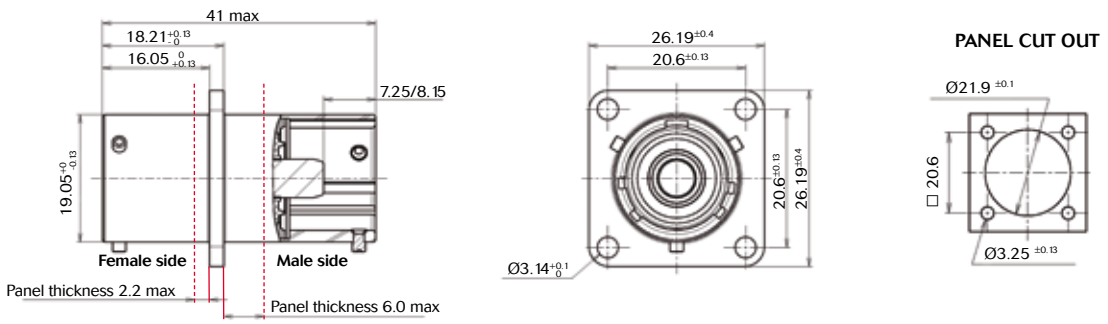

Accessories

Metal protective cap

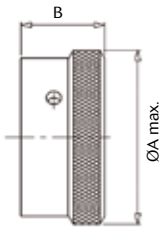

Shell size	Part number	Ø A max.	B max.
12	8STA912	26.10	14.20

Gasket

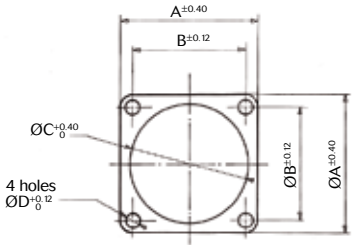

Shell size	Part number	A	B	Ø C	Ø D
12	8525-1433	26.18	20.62	19.05	3.30

Note : all dimensions are in mm

8TA Connector

Features & Benefits

- Rugged aluminium body to ensure long service life in the harshest environment
- Compact low profile derived from MIL-DTL-38999 Series 2
- 6 gold plated #22D contacts
- Environment sealing from interfacial seal and rear grommet
- Positive locking mechanism with locked colour indicators 3 keyway orientations
- Boot termination feature
- Conductive black zinc plating

Technical characteristics

Mechanical

• Shell	Aluminium alloy
• Shell plating	Conductive black zinc
• Insulator	Thermoplastic
• Seal	Liquid silicone rubber
• Contact	Copper alloy
• Contact plating	Gold
• Endurance	500 matings/unmatings
• Shock resistance	300 g for 3 ms and EIA-367-27
• Vibration resistance	random 100 to 1000 Hz - 1 g^2/Hz
• Contact retention	45 N

Electrical

• Test voltage	1300 Vrms (sea level)
• Contact resistance	<14.6 mΩ
• Insulation resistance	≥ 5000 MΩ (at 500 Vdc)
• Contact rating	5 A
• Shell continuity	<60 mΩ

Climatic

• Temperature range	-55°C to +175°C
• Sealing mated connectors	IP67 (1 metre for 30 min. minimum)
• Salt spray	48 hours

8TA Connector

How to order

Basic series		8TA	0	08	35	P	N
Shell style	**0:** Oval flange receptacle (for front or rear mounting) **1:** In-line receptacle **6:** Plug **7:** Jam nut receptacle						
Shell size	08						
Layout	35 (6 contacts size 22D)						
Type of contact	**P:** Pin contacts **S:** Socket contacts						
Orientation	**N:** Red / **A:** Yellow / **D:** Green						

Protective cap

Basic series		8TA	8	08
Shell style	**8:** Plug protective cap **9:** Receptacle protective cap			
Shell size	08			

Range presentation

Plug

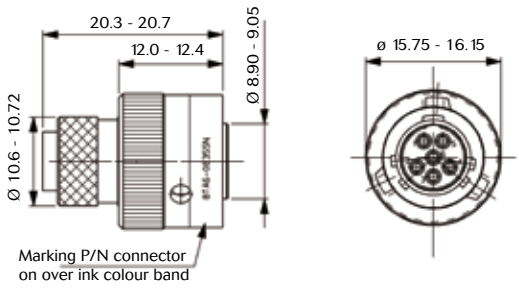

In-line receptacle

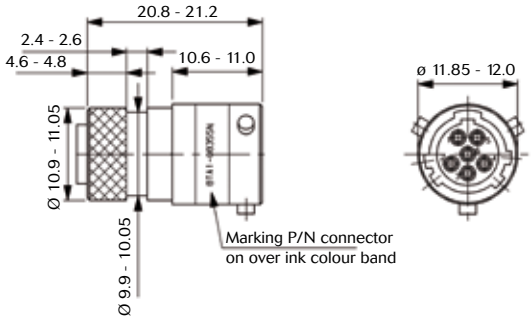

Oval flange receptacle

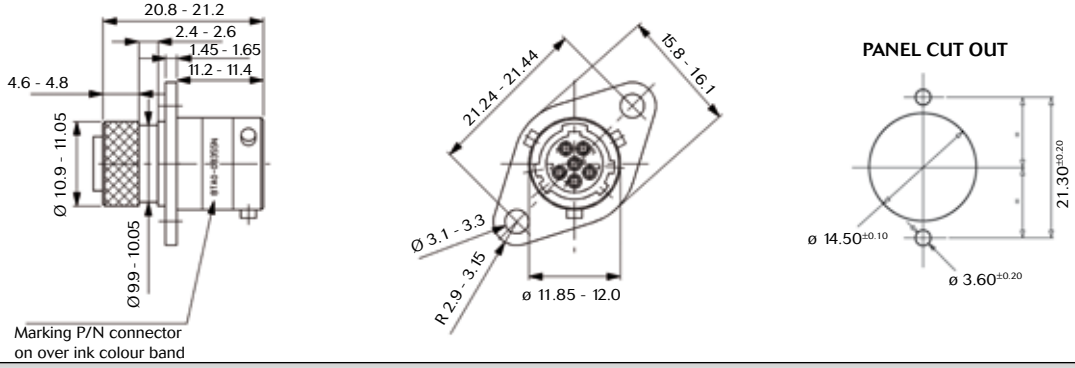

Note : all dimensions are in mm

8TA Connector

Jam nut receptacle

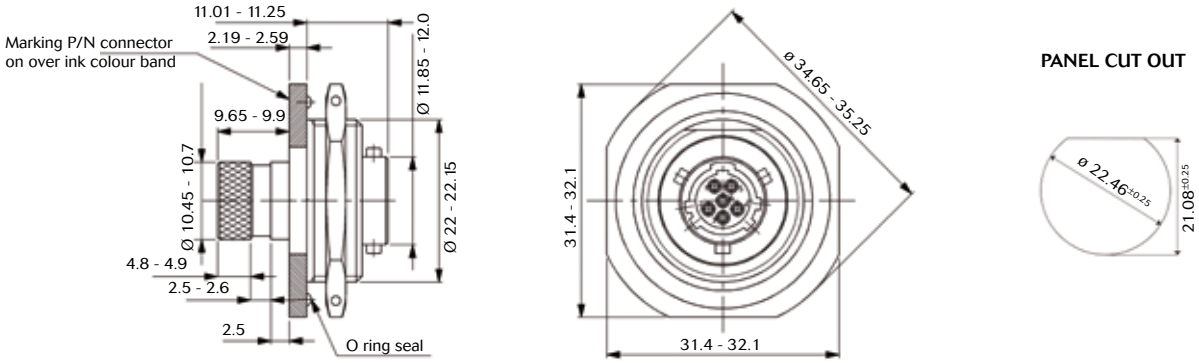

Grounded receptacle

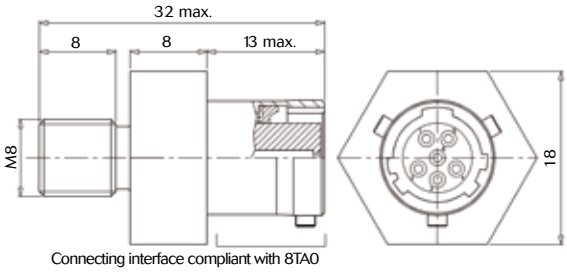

Please consult us for more information

Orientation

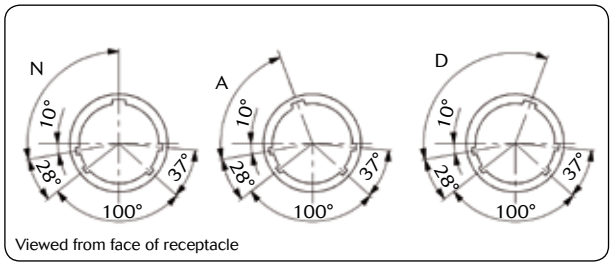

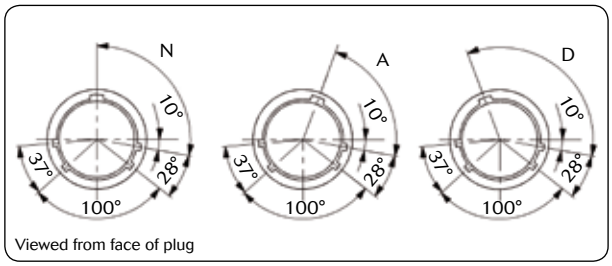

Key positions	Alpha 1	Colour band
N	100°	Red
A	82°	Yellow
D	118°	Green

Note : all dimensions are in mm

8TA Connector

Contacts

Crimped contacts

Contact size	Contact type	Contact Ø max.	Part numbers	Admissible wire section				External dia. over insulation (mm)	
				AWG		mm²			
Crimp contact				Min.	Max.	Min.	Max.	Min.	Max.
22D signal contact	Male	0.76	8599-0702 JJ	28	22	0.095	0.38	0.71	1.37
	Female		8599-0710 900						

Crimping tools

Contact size	Type	Wire sizes	Locator part number		Tool part number	
			Spec.	SOURIAU	Spec.	SOURIAU
22D	Male	22 to 28	M22520/2-09	8476-09	M22520/2-01	8476-01
	Female		M22520/2-06	8476-06		

Accessories

Insertion & extraction tool

Contact size	Part numbers		Colour	
	Spec.	SOURIAU	Insertion	Extraction
22D	M81969/14-01	-	Green	White

Shrinkable termination detail

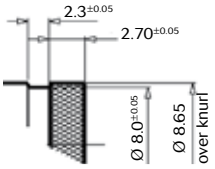

Filler plug

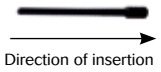

Contact size	Part numbers		Colour
	Spec.	SOURIAU	
22D	MS27488-22	8660-212	Black

Note : all dimensions are in mm

Accessories

Nut plates

Features & Benefits

- Nut plates are available for all 8STA (sizes 02 to 24) two hole flanges mounted connector receptacles.
  Their design was specially made for the Motorsport market.

P/N	Shell size	T (Thread)
8STA-02 M2.5	02	M2.5
8STA-02 M2.0	02	M2
8STA-04	04	M2
8STA-04 M2.5	04	M2.5
8STA-06	06	M2.5
8STA-08	08	M3
8STA-10	10	
8STA-12	12	
8STA-14	14	
8STA-16	16	
8STA-18	18	
8STA-20	20	
8STA-22	22	
8STA-24	24	

Gaskets

Features & Benefits

- Gaskets are available for all 8STA sizes (02 to 24)
- They are available in two versions:
  - Standard version: silicone
  - Fuel tank version: Fluorel
- Gaskets resist to all extreme conditions found in racing environment (temperature, vibration, fluids etc.)

Shell size	P/N Standard	P/N Fuel tank
02	8STA-G02	8STA-G02 022
04	8STA-G04	8STA-G04 022
06	8STA-G06	8STA-G06 022
08	8STA-G08	8STA-G08 022
10	8STA-G10	8STA-G10 022
12	8STA-G12	8STA-G12 022
14	8STA-G14	8STA-G14 022
16	8STA-G16	8STA-G16 022
18	8STA-G18	8STA-G18 022
20	8STA-G20	8STA-G20 022
22	8STA-G22	8STA-G22 022
24	8STA-G24	8STA-G24 022

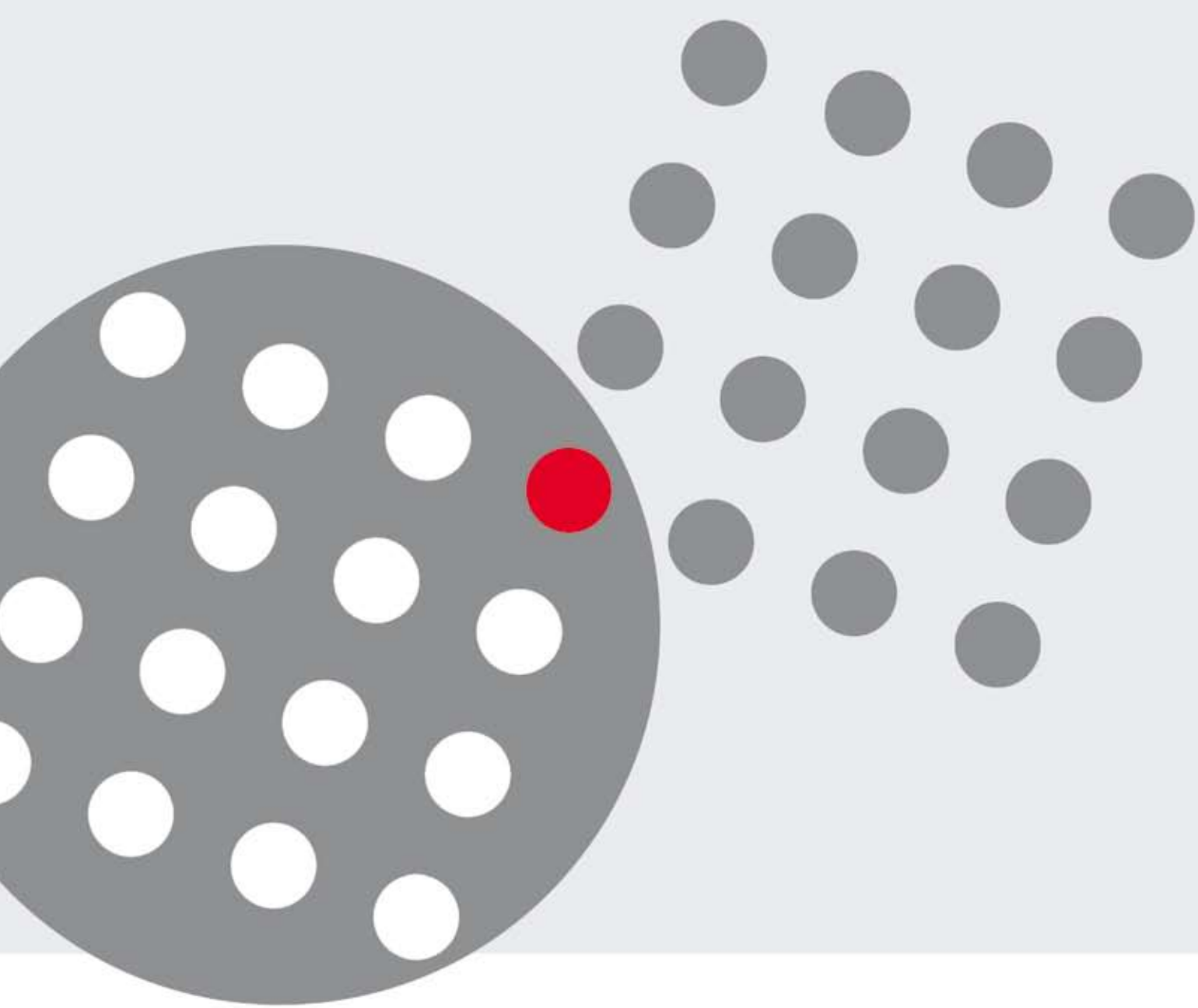

www.souriau.com
www.motorsport-connectors.com
contactindustry@souriau.com

SOURIAU
Connection Technology

IND8STACA02EN © Copyright SOURIAU - All information in this publication presents only general particulars and shall not form part of any contract. All rights reserved to SOURIAU for changes without prior notification or public announcement.