Wire and Cable, Harnessing and Protection Products

TE connectivity

Markets Served

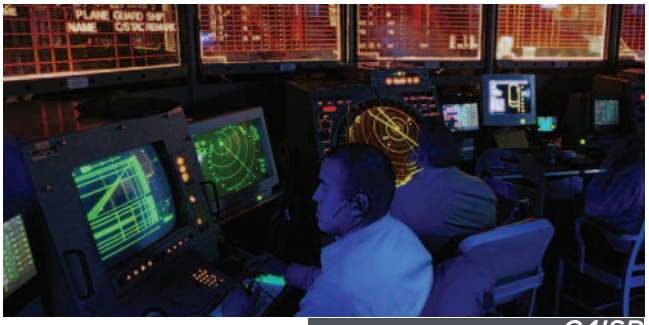

C4ISR

Commercial Aerospace

Ground Defense

Military Aerospace

Military Marine

Missile Defense

Offshore / Civil Marine

Space

www.te.com/ADM

Table of Contents

TE Connectivity Embraces the Most Valued Brand Names Worldwide ii
About TE's Wire and Cable, Harnessing and Heat-Shrinkable Products iii
How to Use this Catalog iv

Application Overview
Seal It 1-1
Connect It 1-2
Insulate It 1-3
Protect It 1-4
Wire It 1-5
Hold It 1-6
Join It 1-7
Beautify It 1-8
Reduce It 1-9
Repair It 1-10
Flex It 1-11
All of It 1-12

Electrical Interconnection System Design
HarnWare™ V6 ..... 2-2 to 2-7
Integrated Military Harness Systems ..... 2-8 to 2-18

Product Sections
Heat-Shrinkable Tubing 3
Molded Parts 4
Adhesives 5
Adapters 6
Assemblies 7
Electrical Interconnect Products 8
Wire and Cable 9
Application Equipment 10

Supporting Information
Equivalents and Conversions 11-2, 11-3
Temperature Conversion 11-3, 11-4
Glossary ..... 11-5 to 11-13
Part Index ..... 11-14 to 11-26

Catalog 1654025
Revised 3-13

www.te.com

Dimensions are shown for reference purposes only. Specifications subject to change.

Dimensions are in millimeters unless otherwise specified.

USA: +1 800 522 6752
Asia Pacific: +86 0 400 820 6015
UK: +44 800 267 666

For additional support numbers please visit www.te.com

TE Embraces the Most Valued Brand Names Worldwide

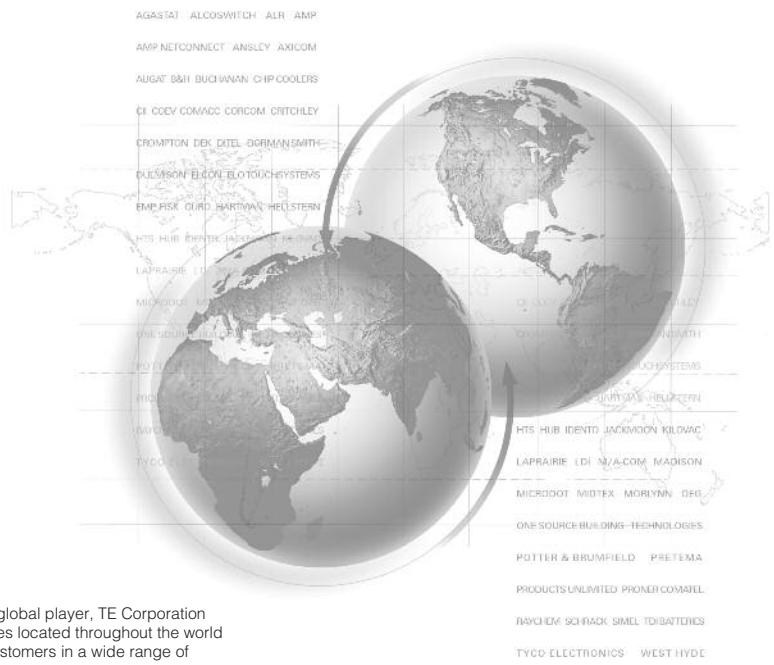

As a truly global player, TE Corporation has facilities located throughout the world serving customers in a wide range of applications.

Tyco Electronics Corporation was established in September 1999 and since then, the company has rapidly grown and strengthened its competencies as an electrical and electronic component supplier, with product offerings in 25 passive and active product segments.

The company has facilities located around the globe serving customers in the aerospace and defense, automotive, commercial electronics/ communications, industrial/energy, marine, medical, military, and rail industries. TE's product portfolio continues to grow, encompassing connector systems and application tooling, active and passive fiber optic devices, complete power systems, wireless components (including IC's, radar sensors, and complete communications systems), GPS and integrated antenna systems, heat-shrink products, circuit protection devices, magnetic components, wire and cable systems, touchscreens, PC boards and backplanes, smart cards, relays, sensors, electronic modules, wire harnessing and labeling products, battery packs, terminal blocks and switches.

A significant result of this continued growth, and a real benefit to customers, is that our technology leadership becomes even stronger. The synergies of expertise in materials science, product design, and process engineering, coupled with knowledgeable application engineers, sales representatives, and customer service personnel enables you to make your next generation of products successful.

Dimensions are shown for reference purposes only. Specifications subject to change.

Dimensions are in millimeters unless otherwise specified.

USA: +1 800 522 6752
Asia Pacific: +86 0 400 820 6015
UK: +44 800 267 666

For additional support numbers please visit www.te.com

About TE Wire and Cable, Harnessing, and Heat-Shrinkable Products

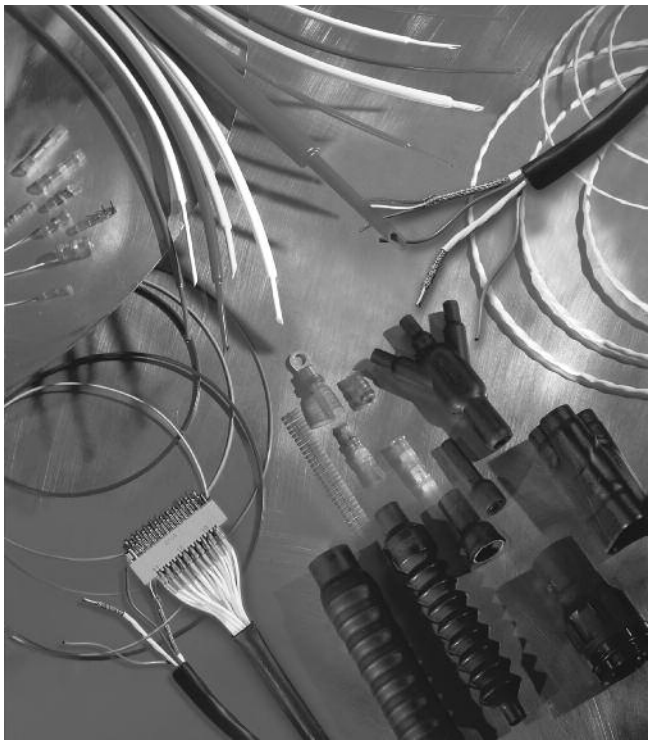

TE's Raychem brand of products, pioneered the application of radiation crosslinking and the development of heat-shrinkable polymer tubing.

TE's Raychem brand of heat-shrinkable polymer products is recognized worldwide. It is backed by a history of proven performance, reliability, innovation and superior quality. TE manufactures the world's largest range of heat-shrinkable tubing – tubing that provides cable protection offering exceptional insulation, mechanical protection, and strain relief. We are the recognized world leader in heat-shrinkable polymer technology.

A broad-based product line of wire and cable is engineered to meet or exceed the most rigorous technical specifications. Performing from -100°C to +260°C [-148°F to +500°F], the product line encompasses fire-resistant cable, small-size controlled electrical cables, multi-conductor cable, high-performance radiation crosslinked ETFE airframe wire, low fire hazard wire, high-performance automotive and commercial wire, and NASA-spec and other space-application types. Additionally, a variety of low-cost, easy-to-install components for wire harnesses and cable assemblies are available including splices, adapters, low-profile rectangular connectors, and contacts. These components are approved to widely recognized standards and specifications that include UL, SAE, MIL, Defense, DNV, Lloyds, and ABS.

TE also provides customized harnessing design supported by a pioneering software package, Harn*Ware*, which enables fast, optimum system design with materials and assembly labor estimates.

For over fifty years, customers have recognized the global capabilities of Raychem products. Combining these advanced products with superior technical support and a global sales/service organization, customers with worldwide operations count on TE to supply the knowledge and products they need to solve specific problems and help them take advantage of opportunity, anywhere it arises. This philosophy has earned TE a reputation for leadership in materials science technologies. Developed from these technologies, Raychem brand products are sold into many industries including aerospace, automotive, electronics, construction, electrical power, utilities, manufacturing, pipeline, process, rail and mass transit, and telecommunications.

Catalog 1654025
Revised 3-13

www.te.com

Dimensions are shown for reference purposes only. Specifications subject to change.

Dimensions are in millimeters unless otherwise specified.

USA: +1 800 522 6752
Asia Pacific: +86 0 400 820 6015
UK: +44 800 267 666

For additional support numbers please visit www.te.com

How To Use This Catalog

This catalog has four main sections:

- Application Overview
- Electrical Interconnection System Design
- Products
- Supporting Information

Application Overview (Section 1) presents general design ideas based on typical uses for Raychem-brand wire and cable, heat-shrinkable tubing and protection products. Application photos depict examples of how customers use our products to enhance the performance and improve the reliability of their specific products in one or more of these generic applications; Seal It, Connect It , Wire It, Insulate It, Protect It, Hold It, Join It, Beautify It, Reduce It, Repair It, Flex It, All of It.

Electrical Interconnection System Design (Section 2) describes wire harness components and harness protection issues and provides a step-by-step guide to selecting the right components for a particular wire harnessing system.

Products (Sections 3-10) showcases our product groups. Each section provides:

- An **overview** of the product group.
- A **table of contents** that lets you see at a glance the product families in that product group.
- A **selection guide** to help you determine which product family will satisfy the requirements of your application.
- An explanation of the **part numbering system** for that product group.
- **Information pages** on each product family.

The product information pages provide some or all of the following information (depending on the product family):

- Typical applications for the product family.
- Product features/benefits.
- Abbreviated installation guidelines.
- Specifications and agency approvals.
- Part number selection information.
- Product data (dimensions, properties, and materials).
- Ordering information.
- Location availability.

Supporting Information (Section 11) provides:

- Equivalents and conversion tables.
- Temperature conversion table.
- Glossary.

Seal It

Advanced materials and product design have resulted in a complete line of products offering the most effective sealing available today: adhesive-lined tubing, molded parts, and a variety of solder and crimp connection devices. These easy-to-use products provide superior waterproofing, resistance to hydrocarbons and other chemicals, protection against corrosion and oxidation, and a barrier against dust and dirt.

- Heat-shrinkable, adhesive-lined products—tubings with high shrink ratios, and molded parts—environmentally protect connector-to-cable transitions.
- Waterblocked and anticapillary wire prevent water and most fluids from wicking between the conductor strands. Bundle sealing products block multiconductor cables.
- Adhesive-lined, heat-shrinkable tubing and end caps seal and protect electronic components and in-line wire splices from fluids, moisture, and corrosion while also providing strain relief.
- Heat-shrinkable caps lined with an adhesive or encapsulant form a moisture-resistance barrier around stub splices and wire ends.
- Heat-shrinkable, moisture blocking systems are designed to provide reliable sealing of wire bundles preventing fluid ingress.

Catalog 1654025
Revised 3-13

www.te.com

Dimensions are shown for reference purposes only. Specifications subject to change.

Dimensions are in millimeters unless otherwise specified.

USA: +1 800 522 6752
Asia Pacific: +86 0 400 820 6015
UK: +44 800 267 666

For additional support numbers please visit www.te.com

Connect It

TE's electrical interconnect products offer reliable, more cost-effective alternatives to traditional connection methods—such as hand soldering, or crimping and then insulating by taping or overmolding.

With our electrical interconnect products, you start with a precisely engineered, fluxed solder preform inside a transparent, heat-shrinkable sleeve. When the product is heated, the solder preform melts, and the sleeve shrinks to create a connection that is fully insulated and strain-relieved.

This ease of use expands your options even as it enhances the quality of your end product, as in these applications:

- Easy and reliable termination of EMI shields to ground, ensuring effective EMI attenuation. Shield termination products are available for computer, data, and instrumentation cable, communications and video cable, and heavy industrial cable.
- Splicing of one component to another, such as a diode connected to one end of a LED.
- Coaxial terminations to PCBs and terminals.

Insulate It

Solving an insulation problem can be easier than you think, especially when you consider the family of Raychem brand products from TE that can provide superior alternatives to standard methods of insulation such as hand-taping or molding-in-place.

- When heated during installation, our radiation-crosslinked tubings shrink to conform to a variety of shapes, providing dependable insulation.
- Heat-shrinkable end caps insulate wire or cable terminations, providing protection from dust and dirt. End caps with adhesive or encapsulant linings also provide protection from moisture because the lining, when heated, melts and flows to fill surface irregularities of the substrate.
- General-purpose polyolefin tubing is widely used to insulate and strain-relieve wire terminations and connections.
- Delicate electrosurgical instruments can be insulated and protected from abrasion by using one of TE's medical-grade, heat-shrinkable tubings specially formulated to meet the requirements of USP Class VI for medical use.
- Components on a PCB, such as capacitors and fuses, can be insulated with a UL VW-1-approved heat-shrinkable tubing to achieve a specific product rating.

Catalog 1654025
Revised 3-13

www.te.com

Dimensions are shown for reference purposes only. Specifications subject to change.

Dimensions are in millimeters unless otherwise specified.

USA: +1 800 522 6752
Asia Pacific: +86 0 400 820 6015
UK: +44 800 267 666

For additional support numbers please visit www.te.com

Protect It

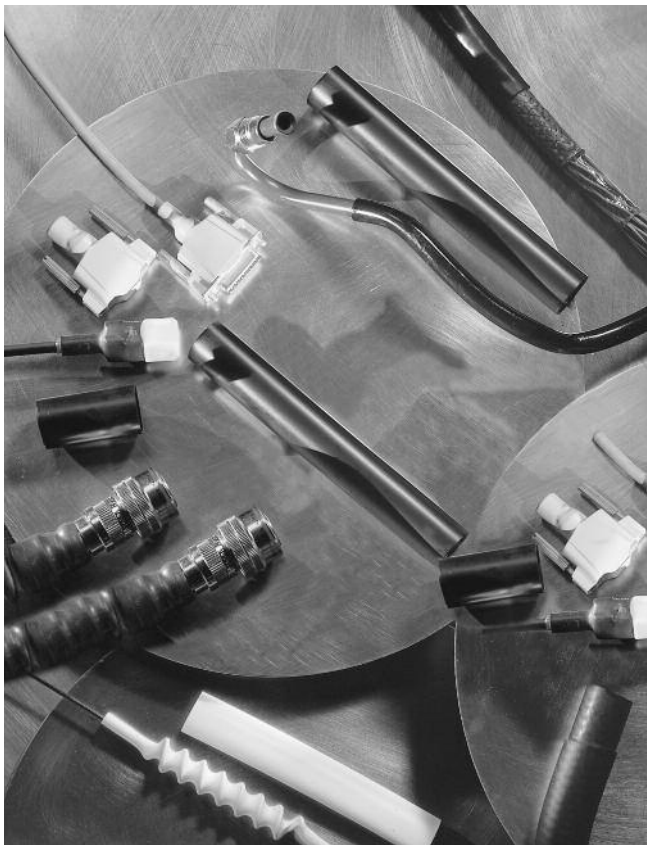

Designing a brilliant solution is good. Protecting a brilliantly designed solution is even better. A whole family of protection products, made from a wide variety of materials, can provide comprehensive protection: mechanical protection, strain relief, resistance to abrasion and crushing, EMI and noise reduction, fluid resistance, and thermal insulation.

- Tinel-Lock ring braid terminations can be used for applications where shielding is critical. These shape-memory-metal products attach metal braid shields to back-shells and provide 360° protection against EMI and EMP.
- Heat-shrinkable tubings provide mechanical protection for hoses and pipes, and also reduce problems caused by wire chafing or cable abrasion.
- Easy-to-install heat-shrinkable tubing and molded parts provide excellent strain relief and electrical insulation for connector-to-cable transitions.
- A heat-shrinkable molded part can relieve the strain on a multiconductor cable to a D-subminiature connector.
- Heat-shrinkable feedthroughs relieve the strain on cables entering junction boxes.
- Highly-flexible, heat-shrinkable fabric tubing provides outstanding abrasion protection for components such as rubber hoses, plastic pipes, and harness wiring bundles, recovering easily even over awkward substrates such as bent hoses.
- Heat-shrinkable MicroFit tubing is used to provide insulation and strain relief for fine-gauge wire (24 to 42 AWG) and fiber optic cables in such end products as medical devices, computers, communications equipment, and commercial electronic products.

Dimensions are shown for reference purposes only. Specifications subject to change.

Dimensions are in millimeters unless otherwise specified.

USA: +1 800 522 6752
Asia Pacific: +86 0 400 820 6015
UK: +44 800 267 666

For additional support numbers please visit www.te.com

Wire It

TE is a leader in the development of high-performance wire and cable products for demanding applications, including aerospace, industrial equipment, instrumentation, marine, and automotive applications. Precision extrusion capability, materials expertise, and design knowledge provide wire products that are lightweight; smaller than comparable-performance constructions; highly flexible, yet mechanically tough; flame-retardant and resistant to a variety of industrial fluids.

All TE products offer outstanding shop-handling characteristics for efficient stripping, wire termination, and bundling. Cable design software is available to create custom multicore cables with unique components, tough but lightweight jacket materials, and optimized shielding. TE can also design complete wiring harnesses for industrial or military applications.

- The FlexLite family of hookup wire provides economical alternatives to fluoropolymers, silicones, and crosslinked polyethylene insulations for applications such as motors, appliances, and lighting, and for applications where thinner walls are needed because of space constraints.
- Raychem brand of high-temperature, dual-wall or single-wall aerospace wire saves space and weight on both military and commercial aircraft and space vehicles.
- Low-fire-hazard primary wires and cable are made from halogen-free, low-smoke materials with a low toxicity index. They offer increased safety, with reduced size and weight, over traditional materials in mass transit and similar applications.

Catalog 1654025
Revised 3-13

www.te.com

Dimensions are shown for reference purposes only. Specifications subject to change.

Dimensions are in millimeters unless otherwise specified.

USA: +1 800 522 6752
Asia Pacific: +86 0 400 820 6015
UK: +44 800 267 666

For additional support numbers please visit www.te.com

Hold It

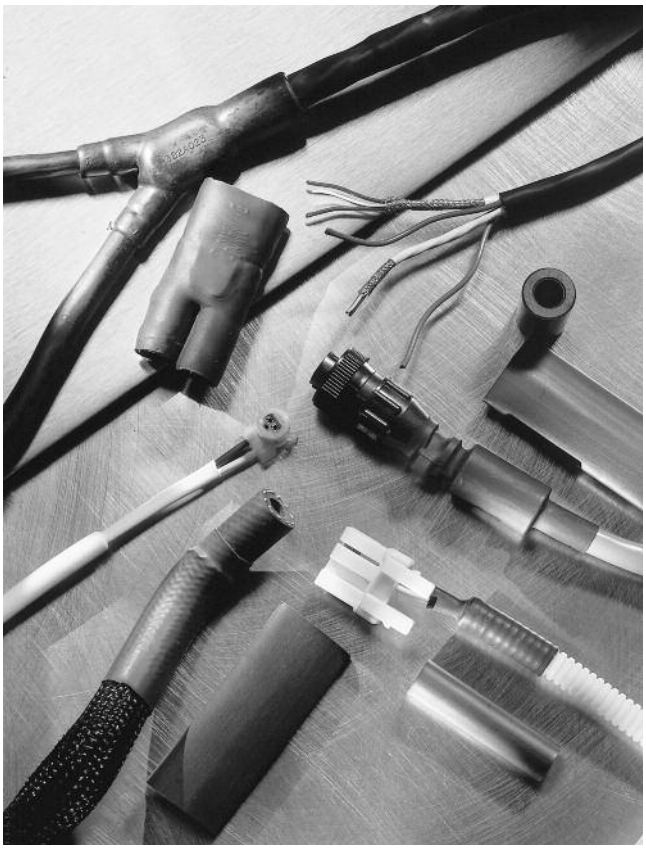

To help you arrive at the best way to securely hold and position a component, take a look at the TE family of products and consider the many ways that you can use them: to keep components in place, bundle and route wires, create a formed shape for potting, or package components securely before final assembly.

- Thin-wall tubings allow bundling of wires to create very flexible, lightweight harnesses that can withstand harsh environments.
- Fiber and/or copper wire components can be bundled for a custom multicore cable.
- Cable legs can be held together with a Y-transition molded part.
- Multicore and film-bonded cables hold wires together and can also provide EMI protection.
- Tubing can hold a covering (braid or convoluted tubing) onto a substrate.
- Two components (such as a resistor and fuse) can be held together as a package by enclosing them with heat-shrinkable tubing.
- Heat-shrinkable fabric tubing will grip substrates, such as harnesses, tightly to provide secure wire bundles without additional fixing.

Dimensions are shown for reference purposes only. Specifications subject to change.

Dimensions are in millimeters unless otherwise specified.

USA: +1 800 522 6752
Asia Pacific: +86 0 400 820 6015
UK: +44 800 267 666

For additional support numbers please visit www.te.com

Join It

When you have a mechanical connection to make, consider the uniform circumferential recovery force of heat-shrinkable tubing and metals in your designs.

- Join two dissimilar materials, such as a rubber flapper to the end of a nylon tube, or the handle of a medical instrument to the instrument's moving parts.
- Assemble a bellows by covering a spring with heat-shrinkable tubing.
- Use Tinel ring adapters to provide the even circumferential force necessary to attach a metal braid shield to a backshell.
- Clear, adhesive-lined tubing connects water tubes in appliances to provide a rugged and aesthetically appealing joint which is also inspectable.
- Heat-shrinkable tubing is used to join polyester cords to heddles in Jacquard weaving loom harnesses.

Catalog 1654025
Revised 3-13

www.te.com

Dimensions are shown for reference purposes only. Specifications subject to change.

Dimensions are in millimeters unless otherwise specified.

USA: +1 800 522 6752
Asia Pacific: +86 0 400 820 6015
UK: +44 800 267 666

For additional support numbers please visit www.te.com

Beautify It

Enhancing the appearance of your brilliantly designed solutions couldn't be easier, when you use TE products.

- Heat-shrinkable tubing—instead of tape—can create a smooth covering with no loose ends.
- Hot-stamp foils (gold or silver) can attractively showcase a company logo.
- Heat-shrinkable tubing can cover the mechanical attachment of one part to another.
- Tubing can attractively cover a metal railing, such as the type used for crowd control.
- Tubing can be color-matched to the original color of fiber, wire insulation, or other components to enhance the appearance of the final product.
- Handles of a variety of tools can be covered with colorful, heat-shrinkable tubing to enhance the appearance of the final product.

Dimensions are shown for reference purposes only. Specifications subject to change.

Dimensions are in millimeters unless otherwise specified.

USA: +1 800 522 6752
Asia Pacific: +86 0 400 820 6015
UK: +44 800 267 666

For additional support numbers please visit www.te.com

Reduce It

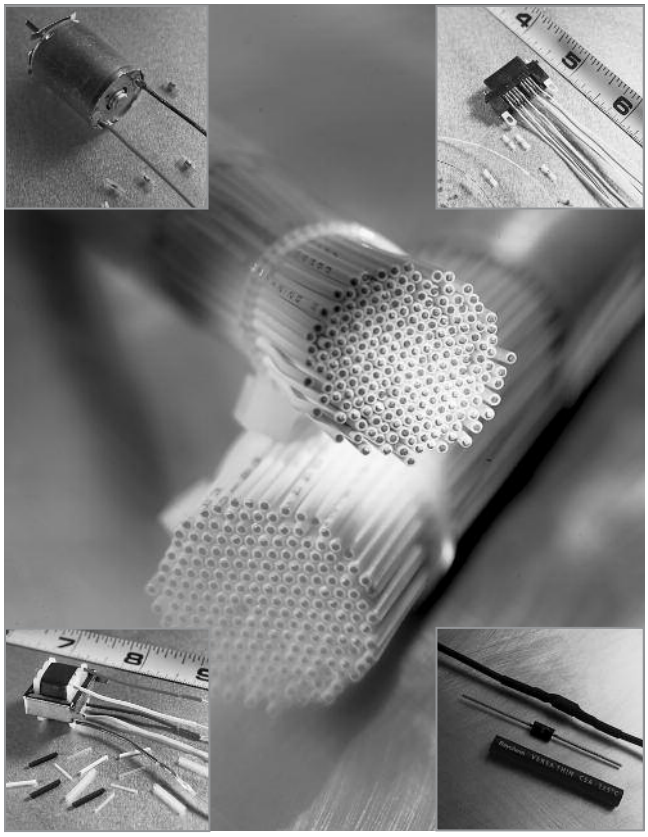

With the trend toward miniaturization and higher-density interconnections, products developed for commercial electronics applications must downsize as well.

- SolderSleeve devices feature a one-step controlled solder process for splicing and terminating wires down to 36 AWG—a method that is more reliable and less craft-sensitive than hand-soldering.
- TE can reliably produce primary wire insulations as thin as 4 mils. Our design software optimizes component placement and shielding to produce small, lightweight custom multicore cables. These cables can offer size and weight reductions that can range from 10 to 40 percent vs. comparable-performance constructions of primary wire or cable.

Catalog 1654025
Revised 3-13

www.te.com

Dimensions are shown for reference purposes only. Specifications subject to change.

Dimensions are in millimeters unless otherwise specified.

USA: +1 800 522 6752
Asia Pacific: +86 0 400 820 6015
UK: +44 800 267 666

For additional support numbers please visit www.te.com

Repair It

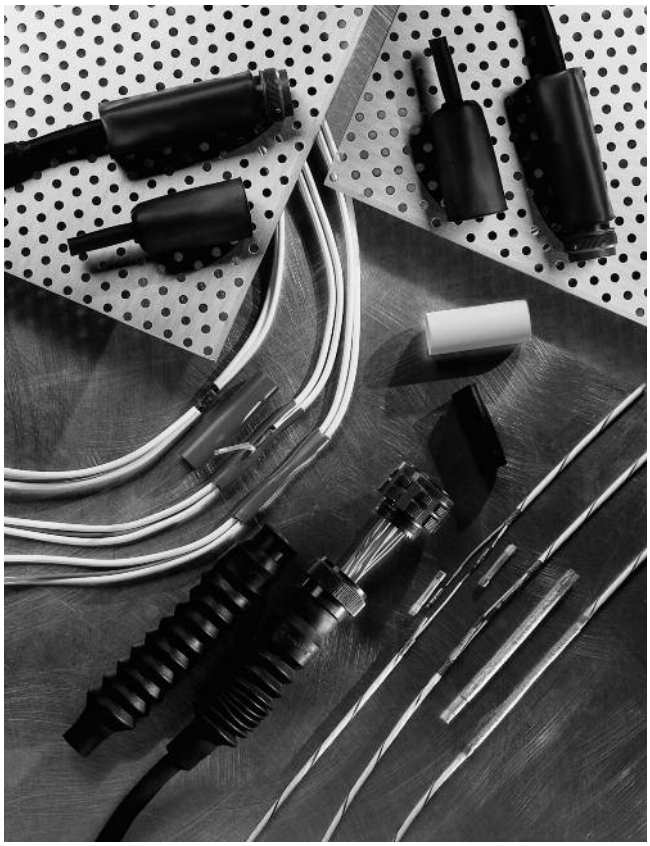

Whether for repair or retrofitting, TE offers a whole family of Raychem brand products that can provide flexible, cost-effective solutions. For example, most failures in electrical wiring harnesses occur within the first six inches of the connector. Raychem brand products make repairs in this area more reliable, long-lived, and cost-effective.

- High-shrink-ratio tubing can be slipped over the connector without depinning to reinsulate or strain relieve the connector-to-cable transition.
- SolderShield repair splice kits provide the components necessary to splice shielded single-wire or multicore cables.
- Adapters and Uniboot molded parts can be combined to allow reentry to the back of the connector area for pin repair.
- Splash-resistant SCL semirigid heat-shrinkable tubing, with its meltable inner wall, can be stripped off the substrate without leaving a sticky residue, thus providing access to connections requiring reentry.
- Flexible, adhesive-lined tubing can be used to repair damaged wire insulation, providing a moisture seal that is resistant to bending of the wire substrate.

Dimensions are shown for reference purposes only. Specifications subject to change.

Dimensions are in millimeters unless otherwise specified.

USA: +1 800 522 6752
Asia Pacific: +86 0 400 820 6015
UK: +44 800 267 666

For additional support numbers please visit www.te.com

Flex It

In applications where flexibility or flex life are important, TE products meet the need — many performing even at low temperatures.

- NT tubing, which is widely used for insulation, strain relief, and abrasion protection on cable harnesses and wire bundles, remains flexible at low temperatures (as low as -70°C [-94°F]) without cracking.
- Hi-Flex heat-shrinkable tubing was developed specifically for sealed cable-jacketing applications where cable flexibility is an important concern. It is also ideal for situations where the cable is subject to motion, such as in industrial machinery, transportation equipment, robotics, and welding.
- For applications where a flexible 90° bend right after the connector is desired, Uniboot molded parts can provide the perfect fit.
- DynaLink wire and cable is designed specifically for applications where flex life is critical: in the robotics industry; in lifts, typing machines, and sewer inspection equipment; and on ships where wire must be capable of unwinding from a large cable reel and then retracting smoothly without strain.

Catalog 1654025
Revised 3-13

www.te.com

Dimensions are shown for reference purposes only. Specifications subject to change.

Dimensions are in millimeters unless otherwise specified.

USA: +1 800 522 6752
Asia Pacific: +86 0 400 820 6015
UK: +44 800 267 666

For additional support numbers please visit www.te.com

All of It

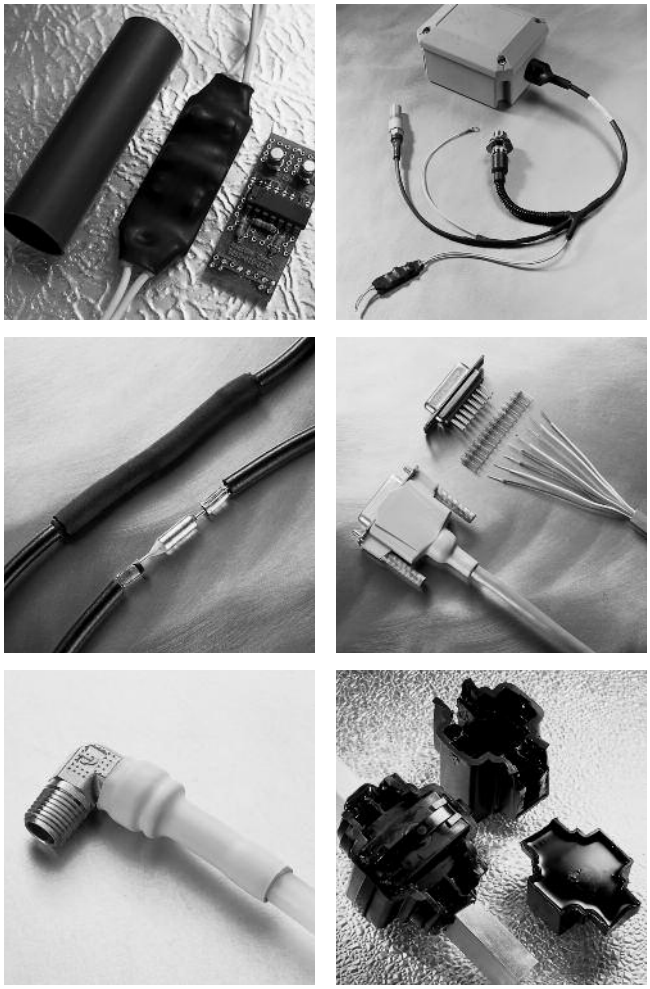

At TE, we like the word "multitasking." So it should come as no surprise that our products are designed to help you integrate several tasks—seal, connect, insulate, protect, wire, hold, join, beautify, reduce, repair, and flex.

In the pages of this catalog, you will find literally hundreds of products designed to provide thousands of solutions—across a wide variety of industries.

Although you will find the catalog features an extensive array of products, keep in mind that, at TE Connectivity, we're always coming up with new ideas and new products—so that we can help you put together the precise solution you need. Also, when you choose any Raychem brand product, you're automatically backed by a nationwide network of sales engineers who can provide application and engineering assistance as well as on-site training.

Dimensions are shown for reference purposes only. Specifications subject to change.

Dimensions are in millimeters unless otherwise specified.

USA: +1 800 522 6752
Asia Pacific: +86 0 400 820 6015
UK: +44 800 267 666

For additional support numbers please visit www.te.com

Table of Contents

HarnWare™ V6 . . . . . .2-2 to 2-7
Integrated Military Harness Systems . . . . . .2-8 to 2-18

This section attempts to provide assistance with most of the considerations applicable to the design of cable and harness assemblies. Caution must be used to ensure that the design is appropriate for a particular application.

TE Connectivity provides this information as a design aid and assumes no responsibility for and makes no representation regarding the suitability of a design for a specific application.

Note: Users should independently evaluate the suitability of the product for their application. Before ordering, check with TE for most current data.

Catalog 1654025
Revised 3-13

www.te.com

Dimensions are shown for reference purposes only. Specifications subject to change.

Dimensions are in millimeters unless otherwise specified.

USA: +1 800 522 6752
Asia Pacific: +86 0 400 820 6015
UK: +44 800 267 666

For additional support numbers please visit www.te.com

HarnWare™ V6

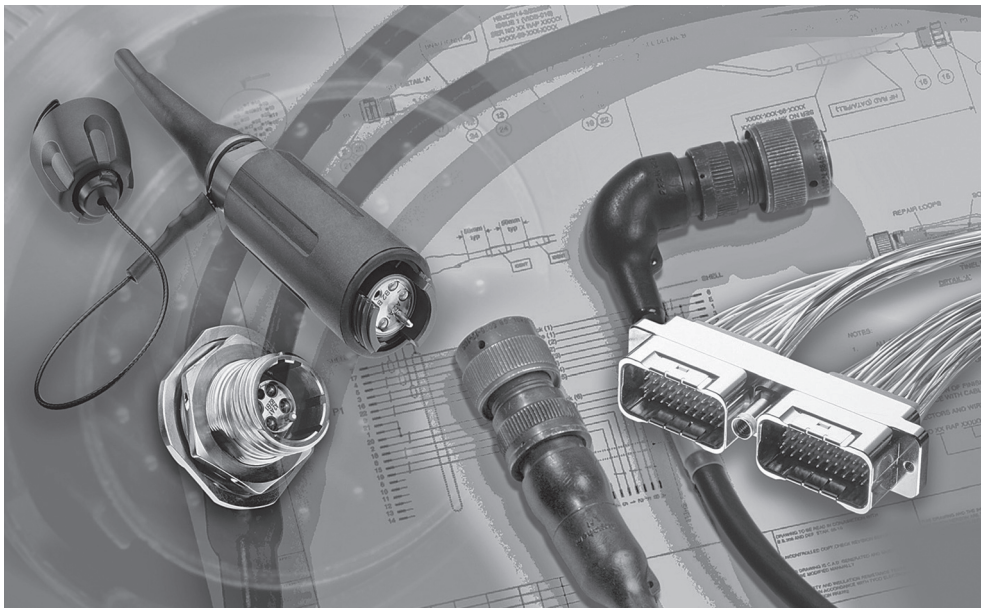

Computer Aided Electrical Wiring Harness Design Software

Introduction

A new version of TE Connectivity's (TE's) popular harness design software has been re-engineered using the latest Microsoft programming tools to offer improvements in performance and enhance the user interface. Additional improvements include new product ranges added to the database, which now includes over 100,000 TE products and several thousand military standard connectors. The HarnWare™ design wizard also has a more modern appearance and includes hyperlinks to relevant product information.

The HarnWare™ computer-aided design package enables users to produce high-quality wiring harness assembly drawings, parts lists/bill of materials, labor estimates, RoHS compliance codes for each component, cable cross-section designs, connector planform drawings, wiring schematics and schedules. Data can also be exported in a variety of formats to allow transfer of information into other computer systems.

TE's extensive product ranges and systems approach to harness design provide complete harness solutions to meet the requirements of most markets, especially demanding applications in the defence, rail, aerospace, naval and motor sport industries.

The HarnWare™ software utilises a drag and drop drawing interface that enables the designer to rapidly draw and designate the overall parameters of the harness. This drawing combines with the HarnWare™ software to guide the designer through a series of design operations. The harness system can be specified and a range of fully compatible components can be selected.

Features

- Compare Design.
- Updated COP Listing.
- Materials and Equipment Listing.
- Extended User Parts Library editable by users.
- Improved export of Parts Listing.
- Create Shape Function.
- Fiber Optic Module including PRO BEAM Connectors.
- Database File Path Selection for Drawing Translator, User Parts Library and Weights.
- Users can supplement the databases of preferred parts by adding other component data into the HarnWare™ User Parts Library.

Benefits

- More detailed and accurate design with the use of preferred parts, helping provide best delivery and price.
- Designs and quotations produced up to 20 times faster.
- Promotes a systems approach for choosing components, materials, adhesives, etc to help confirm parts are compatible with the intended service conditions and with mating parts.
- More cost effective designs, minimised transcription errors and a more disciplined approach to harness design.

Catalog 1654025
Revised 3-13

www.te.com

Dimensions are shown for reference purposes only. Specifications subject to change.

Dimensions are in millimeters unless otherwise specified.

USA: +1 800 522 6752
Asia Pacific: +86 0 400 820 6015
UK: +44 800 267 666

For additional support numbers please visit www.te.com

HarnWare™ V6 (Continued)

Computer Aided Electrical Wiring Harness Design Software

New Products Included in Version 6

- Micro Heat Shrink Moulded Parts.
- Spin-Lock Adaptors.
- STXR Adaptors.
- ADK Rectangular Backshells.
- Soldertact Contact Devices.
- RF Connectors including TNC, BNC and N Type
- GPR Rectangular Connectors.
- AMPLIMITE Rectangular Connectors.
- VG95218 Pt 28 Multicore Cables.
- RG Coaxial Cables.
- D-SCE Range of Identification Sleeves.
- RT-780 Heat Shrink Tubing.

HarnWare™ V6

Since the introduction of the HarnWare™ software V1 in December 1995 many key changes and new features have been introduced. Version 6 of the software contains design modules for heat shrink sealed systems, conduit systems, 1553 data bus and fiber optical assemblies. The new V6 version gives a smarter, faster, better solution for harness design and component selection.

System Specifications

Microsoft Visio: For HarnWare™ software V6 Visio 2007 or 2010 software can be used. Only the 32 bit versions of Visio are supported for use with HarnWare™.

Microsoft Windows: HarnWare™ software is compatible with the 32 bit versions of Windows XP Service Pack 3, Windows Vista Service Pack 1 and Windows 7. It is also compatible with the 64 bit version of Windows 7.

Catalog 1654025
Revised 3-13

www.te.com

Dimensions are shown for reference purposes only. Specifications subject to change.

Dimensions are in millimeters unless otherwise specified.

USA: +1 800 522 6752
Asia Pacific: +86 0 400 820 6015
UK: +44 800 267 666

For additional support numbers please visit www.te.com

HarnWare™ V6 (Continued)

Computer Aided Electrical Wiring Harness Design Software

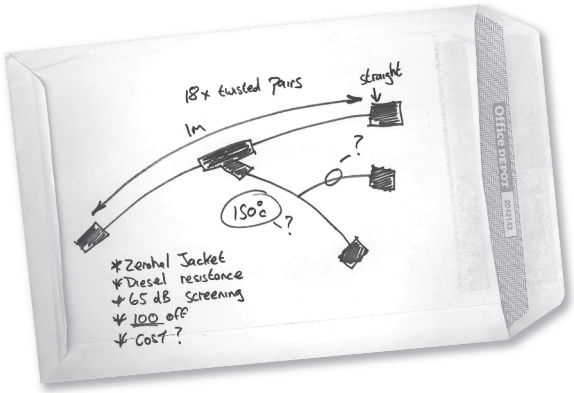

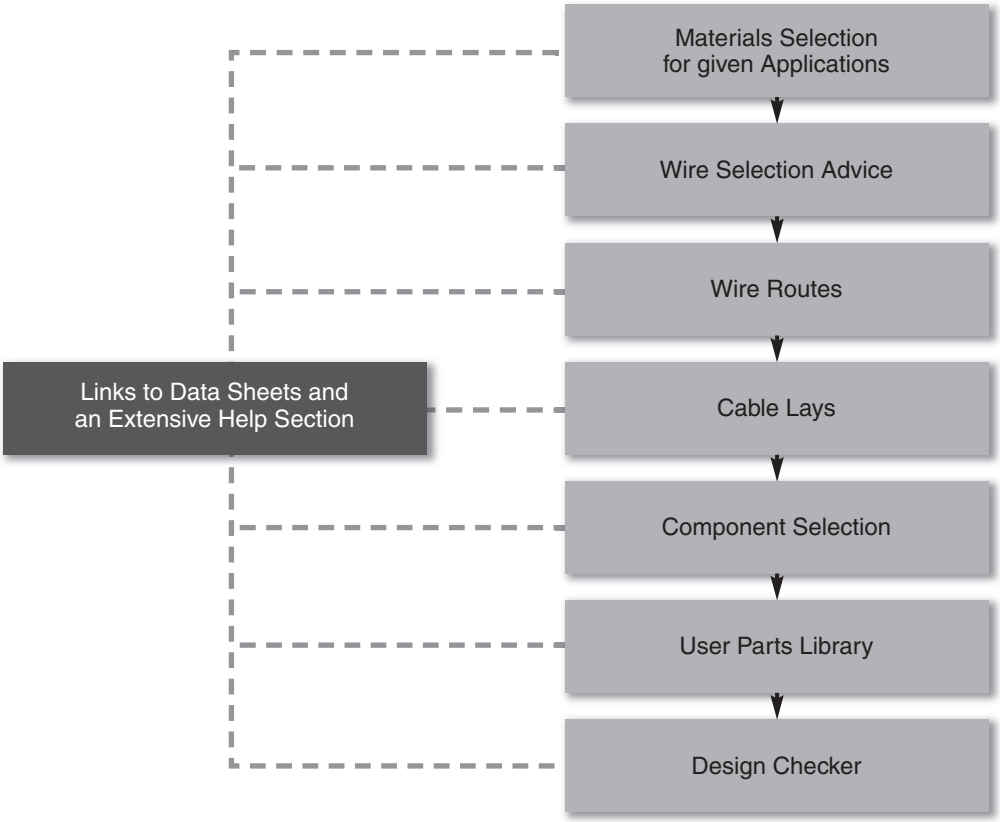

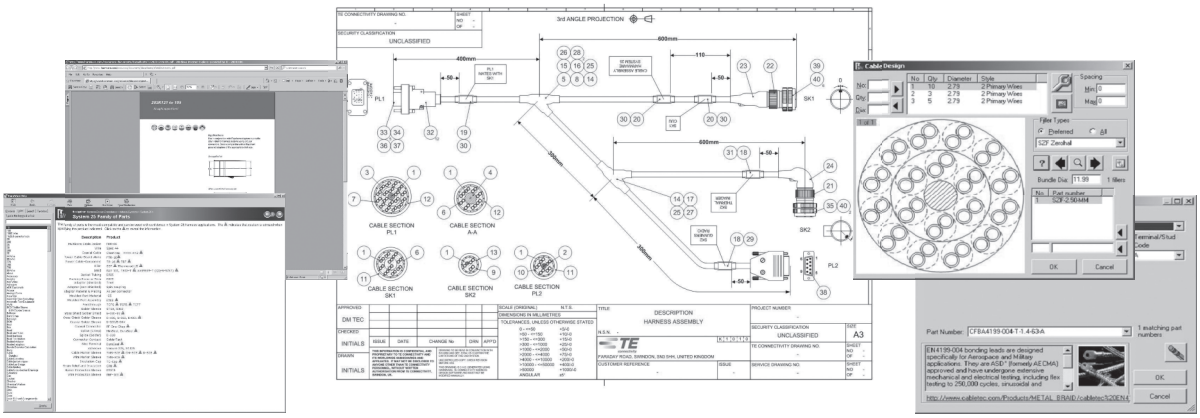

Dimensions are shown for reference purposes only. Specifications subject to change.

Dimensions are in millimeters unless otherwise specified.

USA: +1 800 522 6752
Asia Pacific: +86 0 400 820 6015
UK: +44 800 267 666

For additional support numbers please visit www.te.com

HarnWare™ V6 (Continued)

Computer Aided Electrical Wiring Harness Design Software

Export Parts List
Export Parts List menu options allow parts lists contained in the current Visio document or a selected set of documents to be exported to the Windows clipboard or a text file. This data can then be used in a spread sheet, database.

Codes of Practice
HarnWare™ can list the Codes of Practice (COPs) TE uses to support its harnessing products including information on laying wires, shrinking tubing/moulded parts and terminating connectors.

Export Wiring Data to ATE
HarnWare™ forms allow data such as connectivity, connector references and contact references to be exported to a text file or to the Windows Clipboard. This data can then be used in other systems, for example, automatic test equipment or other electrical design software.

Export Marker Data to TE Wintotal Software System
A Marker Sleeve page can be generated in Microsoft Visio software and or cable marker text and formatting details can be generated in an '.xmt' or COMMS file that is suitable for import into the TE WinTotal labelling software.

Labor Estimates
HarnWare™ will total up the assembly times for all of the products in a harness, selected by using the database, and output a grand total. The labor estimate sheet, that forms part of the HarnWare™ document package, works like a spread sheet, and the times and labor rates within it can be adjusted to suit local conditions.

Tooling and Equipment
The HarnWare™ Materials and Equipment option analyses the drawing and wire list. Materials and equipment that are relevant to the parts contained in the harness design are listed based on TE Codes of Practice.

RoHS Listing
The HarnWare™ Restriction on Hazardous Substances (RoHS) Codes option analyses the parts referenced in the drawing and wire list. A list of RoHS compliance codes for each part can be added to a page in the Visio document

Weight Estimates
The HarnWare™ Weight option provides a means of estimating the weight of a harness. Where component weight data is not available, users can add the relevant data to the database.

Composite Weights and Parts Lists
This option generates a composite parts or weights list for a number of drawings.

Design Comparison
This option is initiated from the HarnWare™ Tools menu and is used to analyse the changes between two Visio design documents, typically two different revisions of a harness design or two similar designs.

Catalog 1654025
Revised 3-13

www.te.com

Dimensions are shown for reference purposes only. Specifications subject to change.

Dimensions are in millimeters unless otherwise specified.

USA: +1 800 522 6752
Asia Pacific: +86 0 400 820 6015
UK: +44 800 267 666

For additional support numbers please visit www.te.com

HarnWare™ V6 (Continued)

Computer Aided Electrical Wiring Harness Design Software

The HarnVis™ 3D harness design visualisation system offers automatic generation of to-scale 3D models of wiring harnesses and components. These 3D models provide “virtual prototypes” of harnesses allowing the user to see the harness with lengths, diameters and parts shown to-scale. By simply clicking on a part, the user can access such data as part numbers, materials, finishes, adhesives, etc.

These “virtual prototypes” reduce the potential for errors, harness lay-up boards (also known as nail, form and peg boards) can be modelled and pegs can be automatically positioned along the harness legs. When a long harness leg makes it necessary, legs can be bent to fit a lay-up board.

3D models of harnesses and of many TE parts can be exported from the HarnVis™ system in the form of IGES files for use in other CAD systems.

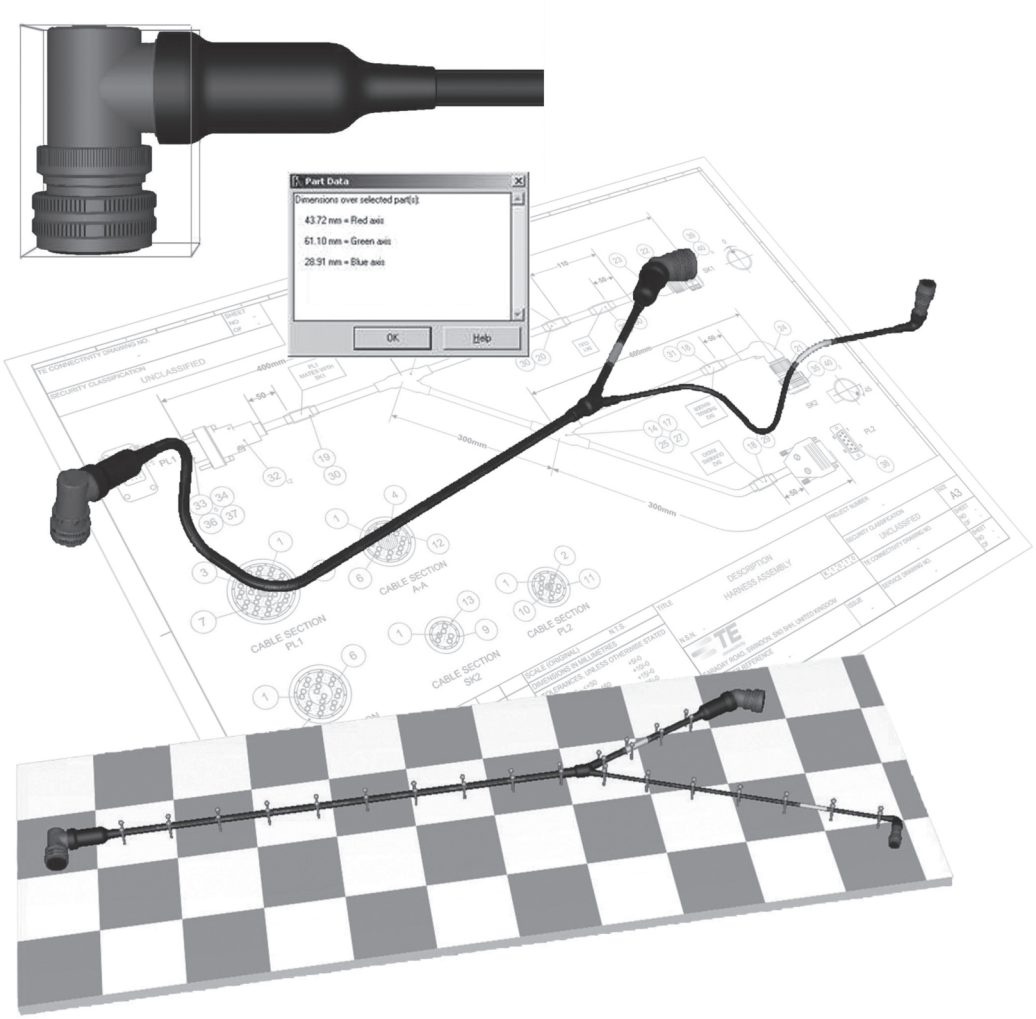

Catalog 1654025
Revised 3-13

www.te.com

Dimensions are shown for reference purposes only. Specifications subject to change.

Dimensions are in millimeters unless otherwise specified.

USA: +1 800 522 6752
Asia Pacific: +86 0 400 820 6015
UK: +44 800 267 666

For additional support numbers please visit www.te.com

HarnWare™ V6 (Continued)

Computer Aided Electrical Wiring Harness Design Software

HarnWare™ V6 User Friendly Forms

The forms for selecting the wide range of TE components are clear and easy to use with many links to data sheets and design help topics.

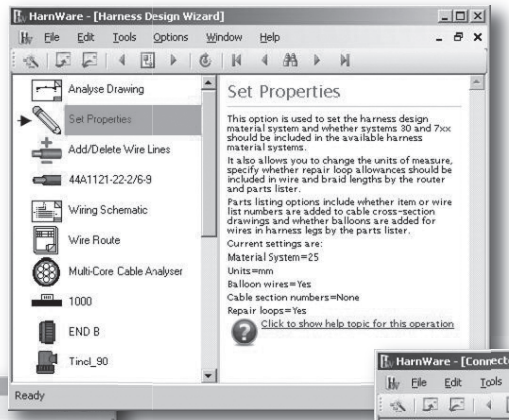

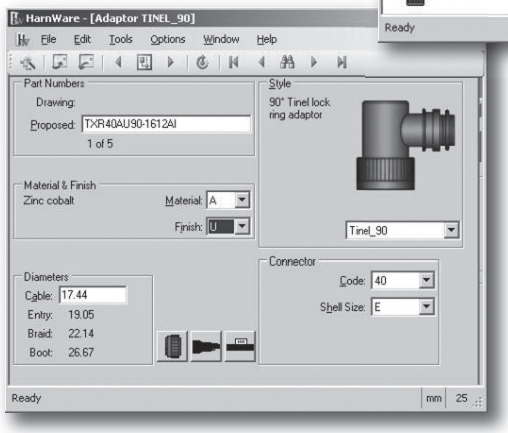

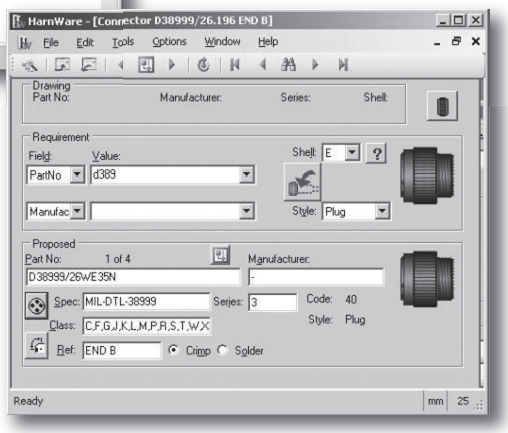

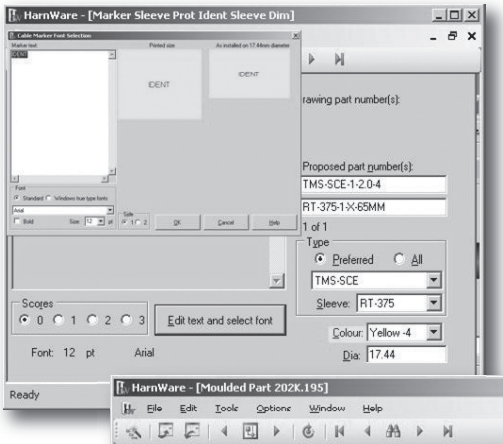

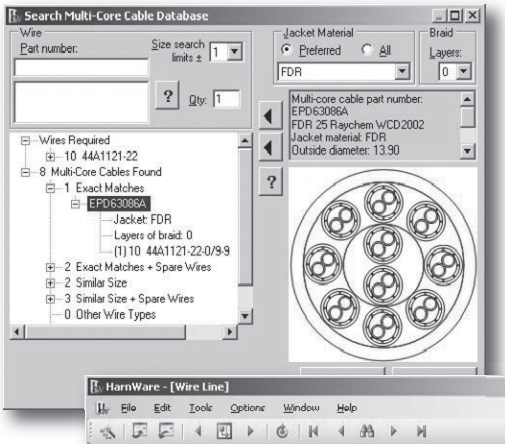

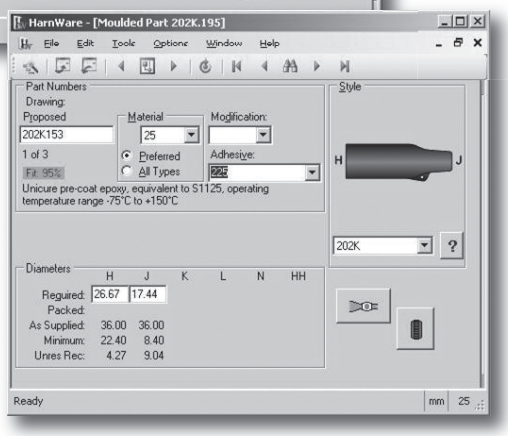

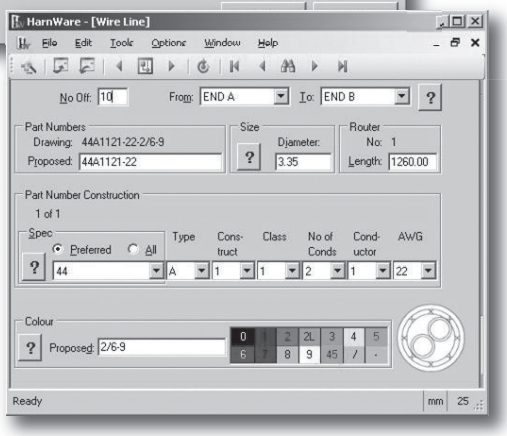

Dimensions are shown for reference purposes only. Specifications subject to change.

Dimensions are in millimeters unless otherwise specified.

USA: +1 800 522 6752
Asia Pacific: +86 0 400 820 6015
UK: +44 800 267 666

For additional support numbers please visit www.te.com

Integrated Military Harness Systems

Assembled military harness.

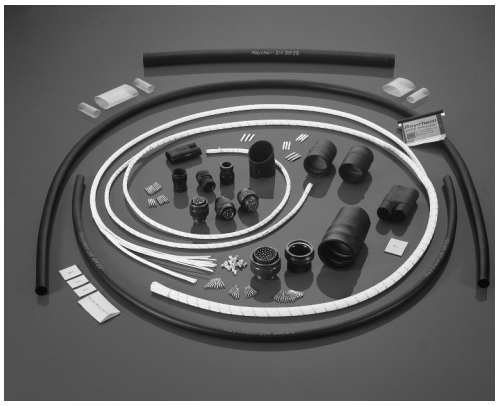

Military harness system components.

TE's integrated harness systems have been developed for a wide range of defense and industrial applications. Each system consists of compatible components, including cable jackets, heat-shrinkable components, and adhesives. Performance of these parts is assured because all components are tested separately and as part of an assembled system (see photo top left).

A typical designed harness consists of seven component parts (pictured at right):

1. Primary wire and cable
2. Heat-shrinkable tubing
3. Backshell adapter
4. Molded part
5. Adhesive
6. Cable jacket
7. Marker sleeve*

Additional components for harnessing systems include the following:

- A wide range of special devices, such as SolderSleeve devices for primary wire interconnection.
- A selection of electrical shielding (screening) options, including braids and termination assemblies.
- Multiconductor (multi-core) cables.
- Specialty adhesives and sealants for complete environmental sealing.**

Table 1 on the next page serves as both a summary of Raychem brand products for specific harnessing systems and a selection table for harnessing system components. An explanation of how to select components for a harness system follows.

*TE Identification products information available at www.te.com

**TE Sealant product information available at www.te.com

Dimensions are shown for reference purposes only. Specifications subject to change.

Dimensions are in millimeters unless otherwise specified.

USA: +1 800 522 6752
Asia Pacific: +86 0 400 820 6015
UK: +44 800 267 666

For additional support numbers please visit www.te.com

Integrated Military Harness Systems (Continued)

Table 1. Harnessing Systems and Their Components

Components	System 10	System 20	System 25	System 30	System 100	System 200	System 300
Wire	44	44	44	55	99, 100A, 100G	55	55
Tubing	Versafit	NT-FR	DR25	VPB	ZHTM	RW-200	RT555
Adapter material and plating finish chosen for compatibility with the connectors.							
Molded part	-3, -4, -71	-51	-25	-50	-100	-12	-55/-125
Preinstalled Rayaten molded part	-35	—	-25S	—	-100S	—	—
Adhesive	S1017, S1030	S1124, S1048	S1048, S1125	S-1125, S-1255-04	S1030, S1125,	S1125, S1255	S1255-04
Precoated adhesive	/42, /180	/164,/86	/86, /225	—	/180	—	—
Conductive adhesive	—	—	S1184	—	S1184	—	—
Cable jacket	Thermorad	NT-FR	FDR-25	Thermorad VPB	Zerohal	RW-200	RT555
Marker sleeve*	TMS-SCE	TMS-SCE	TMS-SCE	TMS-SCE	HX-SCE	HT-SCE	HT-SCE

*TE Identification products information available at www.te.com.

Selection Process

Selecting the components for a harnessing system is a four-step process:

Step 1: Select the material system appropriate for the operating conditions and environment to which the harness will be exposed.

Step 2: Select the adhesive system appropriate for the material system you select in Step 1.

Step 3: Determine the level of EMI shielding required.

Step 4: Select the components.

Each step is described on the pages that follow. A selection table accompanies each step. You can also use Harn*Ware* software to design your harness.

Step 1. Select the Material System.

Detailed in Table 2 on the next page are the major material systems for use in a wide range of operating conditions and environments.

Choose a material system that:

- Has the physical characteristics your harness requires.
- Will accommodate the operating temperature and the fluids and abuse to which the harness will be exposed.

Catalog 1654025
Revised 3-13

www.te.com

Dimensions are shown for reference purposes only. Specifications subject to change.

Dimensions are in millimeters unless otherwise specified.

USA: +1 800 522 6752
Asia Pacific: +86 0 400 820 6015
UK: +44 800 267 666

For additional support numbers please visit www.te.com

Integrated Military Harness Systems (Continued)

Table 2. Material System Selection

	System 10	System 20	System 25
Operating temperature	-20°C to +60°C [-4°F to +140°F]	-55°C to +121°C [-67°F to +250°F]	-75°C to +150°C* [-103°F to +302°F]
Physical characteristics	• Environmentally sealable • Lightweight • Small diameter • Flexible	• Environmentally sealed • Tough • Flexible • Low profile	• Environmentally sealed • Rugged • Abrasion-resistant • Very flexible
Flammability	• Flame-retardant • Self-extinguishing	• Flame-retardant • Self-extinguishing	• Flame-resistant • Self-extinguishing
Fluid resistance	• Resists common industrial and military cleaning solvents and degreasers.	• Resists most commonly used military fuels, oils, and greases	• Resists most common military fuels, oils, and greases. up to 70°C [158°F].
Typical applications	• Used in high-performance industrial applications, and in military communication and test equipment.	• Specially suited to military vehicles and engine compartments, low profile shapes save space and weight.	• Specially suited to military vehicles, aerospace and marine applications, and communication and test equipment.

	System 30	System 100	System 200
Operating temperature	-55°C to +150°C [-67°F to +302°F]	-30°C to +105°C [-22°F to +221°F]	-55°C to +200°C [-67°F to +392°F]
Physical characteristics	• Environmentally sealed • Tough • Flexible • Low profile	• Environmentally sealed • Flexible	• Environmentally sealed • Very flexible
Flammability	• Flame-retardant • Self-extinguishing	• Low toxicity index (as defined by NES-13) • Low smoke emission (as defined by NES-711) • Low corrosive gas evolution	• Highly flame-retardant
Fluid resistance	• Resists most of commonly used military fuels, oils, and greases.	• Resistant to a range of military fuels, oils, and greases.	• Resists long-term immersion in military fuels, oils, and greases at elevated temperatures.
Typical applications	• Specifically suited to military vehicles and engine compartments for higher temperature applications, low profile shapes save space and weight.	• Specially suitable for confined habitat areas in military and civil applications. • Extensively used in surface and submarine vessels and underground railways	• Used where there is prolonged exposure to high temperatures. • Used where a harness may be permanently immersed in difficult fuels, such as in fuel tanks.

	System 300
Operating temperature	-55°C to +200°C [-67°F to +392°F]
Physical characteristics	• Environmentally sealed • Highly abrasion resistant • Low profile
Flammability	• Highly flame-retardant
Fluid resistance	• Performs in aggressive fluids at extremely high temperatures
Typical applications	• Permanent immersion in aggressive fluids

*Per VG 95343.

Integrated Military Harness Systems (Continued)

Harnessing Systems and Their Components — NBC Survivable Systems*

Components	System 770	System 780	System 790
Wire	44	55	55
Tubing	RT-770	RT-780	RT-790
Molded part	-770	-780	-790/-791
Adhesive	S-1264	S-1255-04	S-1255-04
Marker sleeve cover	RT-375	RT-375	RT-375
Marker sleeve**	TMS-SCE	NBC-SCE	NBC-SCE

**TE Identification products information available at www.te.com.

Material System Selection

	System 770	System 780	System 790
Operating temperature	-55°C to +125°C [-67°F to +257°F]	-65°C to +175°C [-85°F to +347°F]	-65°C to 200°C [-85°F to +392°F]
Physical characteristics	• Environmentally sealed • NBC resistant • Flexible	• Environmentally sealed • NBC resistant • Flexible	• Environmentally sealed • NBC resistant • Flexible
Flammability	• Flame-retardant • Self-extinguishing	• Flame-retardant • Self-extinguishing	• Flame-retardant • Self-extinguishing
Fluid resistance	• Resistant to NBC uptake and decontamination	• Resistant to NBC uptake and decontamination	• Resistant to NBC uptake and decontamination
Typical applications	• Base-line system for NBC resistant applications	• High temperature system for NBC resistant applications	• Extreme high temperature system for NBC resistant applications

Adhesive Selection

Material System	Adhesive Type	Component Adhesive	Precoated Adhesive Designation	Service Temperature
System 770	Two-part Epoxy	S-1264	—	150°C
System 780	Thermoset tape	S-1255-04	—	200°C
System 790	Thermoset tape	S-1255-04	—	200°C

Catalog 1654025
Revised 3-13

www.te.com

Dimensions are shown for reference purposes only. Specifications subject to change.

Dimensions are in millimeters unless otherwise specified.

USA: +1 800 522 6752
Asia Pacific: +86 0 400 820 6015
UK: +44 800 267 666

For additional support numbers please visit www.te.com

Integrated Military Harness Systems (Continued)

Step 2. Select the Adhesive System.

Two types of adhesives are used to bond heat-shrinkable boots and transitions to tubing or wire jacketing:

- Thermosets, which include epoxies and other two-part systems.
- Thermoplastics, which include pre-coated meltable adhesives applied to parts during manufacture and those applied as meltable tapes during assembly.

Table 3 below outlines the differences between thermosets and thermoplastics.

Table 4 shows which adhesive type is appropriate for each harness material system.

Table 3. Comparison of Adhesive Types

	Thermoset	Thermoplastic
Method of adhesion	Cures through chemical reaction.	Melts, flows, and solidifies.
Application	Two-part types require mixing and application at assembly.	Precoated types require no preparation at assembly.
Cure time	Varies with cure temperature. Oven cure usually desirable.	Not required. Adhesive functional when cooled to room temperature.
Strength	Retains most strength at elevated temperatures.	Loses strength as melt temperature is approached.
Disassembly	Items can be forcibly peeled apart when heated sufficiently.	Items can be separated when heated to temperature of the adhesive.
Repair/reassembly	Requires new adhesive or hot rollback to reenter behind connector without affecting adhesive bonds.	Can be reheated to form new bond if sufficient adhesive remains.

Table 4. Adhesive Selection

Material System	Adhesive Type	Component Adhesive	Precoated Adhesive Designation	Service Temperature
System 10	Thermoplastic	S-1030	/180	80°C
		S-1017	/42	60°C
System 20	Thermoplastic	S-1124	/164	105°C
		S-1048	/86	120°C
System 25	Thermoplastic	S-1048	/86	120°C
	Two-part thermoset	S-1125	/225	150°C
System 30	Thermoset Tape	S-1255-04	—	200°C
	Two-part thermoset	S-1125	—	150°C
System 100	Thermoplastic	S-1030	/180	80°C
		S-1048	/86	120°C
	Two-part thermoset	S-1125	—	150°C
System 200	Two-part thermoset	S-1125	—	150°C
	Thermoset tape	S-1255-04	—	200°C
System 300	Thermoset tape	S-1255-04	—	200°C
System 770	—	S-1264	—	—
System 780	Thermoset tape	S-1255-04	—	200°C
System 790	Thermoset tape	S-1255-04	—	200°C

Dimensions are shown for reference purposes only. Specifications subject to change.

Dimensions are in millimeters unless otherwise specified.

USA: +1 800 522 6752
Asia Pacific: +86 0 400 820 6015
UK: +44 800 267 666

For additional support numbers please visit www.te.com

Integrated Military Harness Systems (Continued)

Step 3. Determine the Level of EMI Shielding Required.

TE offers several methods and technologies for controlling electromagnetic interference (EMI) and noise in cable harnesses. Developed in response to well-established threats in military and other harsh environments, these technologies can be employed in compatible shielding (screening) systems to achieve the level of shielding required for a harness system. Table 5 on page 2-15 outlines the shielding requirements for various types of threat and levels of interference.

Introduction

This section is intended as a guide for the use of harness designers who are required to achieve a level of EMI control in their design practices. It is not intended that it should be a definitive statement on all aspects of EMI control for harnesses. In case of difficulty contact us for further clarification or consultancy.

For well-designed EMI control of electrical systems it is essential that a detailed knowledge of the system requirements and susceptibility be obtained. The chosen level of shielding will be dependent on the:

- Susceptibility of electrical system.
- Types of components used.
- Physical layout of the system.
- Equipment practices adopted.
- Anticipated EMI threat.

For the most cost effective design of harnesses, which offer a long-term stability in performance, the system should be designed to achieve a balance of component characteristics. Components should only be used if they are qualified to a minimum level of EMI performance and the performance and test method should be applicable to the design technique being used.

For quality assurance purposes minimum EMI characteristics should always be specified and for critical harnesses the complete performance should be measured. The technique to be adopted should always be specified.

Finally the inter-relationship between harnesses and the protection, termination and grounding of equipment boxes is vital for good system performance against EMI. All components form part of the external shield on the system and therefore should be considered in the overall EMI design process.

Subjects covered in this topic are:

- Harness Types - point to point and branched
- Shielding Levels - calculations

Harness Types

Harnesses are divided into two types, point-to-point and branched. The advantages and disadvantages of each from an EMI control standpoint are described below. No attempt has been made to analyze their relative merits in mechanical or installation terms.

Point To Point:

The three major components of this type of harness are: connectors, cable, and connector accessories.

Connectors

There are many different types of circular military connectors. However, for a well-shielded harness only those connectors having a guaranteed performance level should be used e.g. MIL-C-26482 Series II and MIL-C-38999 series 1 and 2, and series 3 and 4.

Cable

Cable used in this type of harness is generally machine made. Hand laid cables may also be used but generally the shields incorporated in these harnesses vary in consistency of performance. In the case of machine made cables all shields should be designed for optimum shielding effectiveness at radio frequency.

Catalog 1654025
Revised 3-13

www.te.com

Dimensions are shown for reference purposes only. Specifications subject to change.

Dimensions are in millimeters unless otherwise specified.

USA: +1 800 522 6752
Asia Pacific: +86 0 400 820 6015
UK: +44 800 267 666

For additional support numbers please visit www.te.com

Integrated Military Harness Systems (Continued)

Connector Accessories

Connector accessories, such as Raychem brand adapters, are available in many styles and therefore their performance varies with construction. For a level of consistency in performance it is essential that, as with connectors, a guarantee in performance level be achieved.

Fittings not specified in this way may significantly degrade the overall system performance.

Branched

In addition to those components described above, branched harnesses include transitions. This type of harness is usually made by hand and it is therefore difficult to incorporate accurately made machine fabricated shields. The implications of this are:

Shields

Cable shields may be put on by hand or by feeding through a braiding machine. However, as braid optimization depends on all the constructional parameters of the braid being accurately specified, unless braid is well constructed the shielding performance can suffer dramatically. Reductions in shield performance of 20-40 dB have been measured on badly made branched harnesses. The alternative method is to use pull on braids. If the cable bundle diameter is known the braid may be designed for optimized performance.

Transitions

Transitions, as with accessories, are very susceptible to performance variability with construction type.

For high performance harnesses these components should also have a guaranteed performance.

In general the use of techniques such as hand soldering or the use of butted tape wraps are not recommended except where only a low performance of less that 40dB is required.

Shielding Levels and Component Performance

System Performance

To specify the overall requirements of a complete electronic system in terms of its EMI characteristics it is necessary to consider the performance of the individual components parts. The harnesses form one of the major entry points for interference and this as such can degrade a complete system performance by a significant amount. In general terms, assuming that a shielded harness system is used, with the available components on the market the overall harness system performance and typical applications may be as below.

- 40 to 50 dB Standard shielded systems for insensitive systems.
- 50 to 60 dB Military standard shielded systems for general applications.
- 60 to 80 dB As above but where full threat EMP & TEMPEST protection is required.
- 80 to 100 dB Severe TEMPEST and very sensitive systems.
- Over 100 dB Exceptional shielding requirements only.

Shield performance is specified in two ways, either as a power relationship in decibels (dB) or as an absolute measurement of the shield performance in terms of the surface transfer impedance. Except for very specific low frequency problems it is general to specify the performance at frequencies in the range 0.1MHz to 100MHz.

Integrated Military Harness Systems (Continued)

Safety Margins

As with all designs EMI system design should not be performed to the "limit of performance safety margin should always be incorporated when determining the minimum shielding level appropriate for consistent operation of the system.

The inter-relationship of shielding effectiveness measured in decibels and the surface transfer impedance in ohms presents the designer with a conversion difficulty. External harness circuits vary, as do the coupling characteristics and it is therefore only possible to give an approximate conversion. The normal conversion from decibels to ohms and vice versa is to a reasonable approximation:

Screening Effectiveness (dB) = $36 - 20 \log_{10} (Z_T \text{ (Ohms)})$

The constant term is developed from the expressions for the characteristic impedance of the line formed by the harness shield and the ground plane and the internal characteristic impedance of the inside of the harness. The translation from shielding effectiveness to surface transfer impedance is shown below in Table 5 for S.E. from 20 to 105dB.

Connectors

A study of those connector specifications having an EMI test shows that they are generally specified in the frequency band 100MHz to 1GHz. For an assessment at lower frequencies the low frequency performance as dictated by the d.c. resistance of the connector is required. These two parameters enable the EMI characteristic to be made of the complete connector performance. Typical values for standard connectors are 65dB (MIL-C-26482 Series II) and 90dB (MIL-C-38999 Series III) connectors.

Table 5 - Screening Effectiveness (SE)/Surface Transfer Impedance (Zt) Relationships

S.E. (dB)	Z_T (ohms)	S.E. (dB)	Z_T (ohms)
20	6.309	65	0.0355
25	3.548	70	0.0200
30	1.995	75	0.0112
35	1.122	80	0.0063
40	0.631	85	0.0036
45	0.355	90	0.0020
50	0.200	95	0.0011
55	0.112	100	0.0006
60	0.063	105	0.0004

Catalog 1654025
Revised 3-13

www.te.com

Dimensions are shown for reference purposes only. Specifications subject to change.

Dimensions are in millimeters unless otherwise specified.

USA: +1 800 522 6752
Asia Pacific: +86 0 400 820 6015
UK: +44 800 267 666

For additional support numbers please visit www.te.com

Integrated Military Harness Systems (Continued)

Cable

In accordance with most common cable specification the shielding performance of a cable is specified at 30MHz. It is also well into the band where inductive leakage is the primary penetration characteristic. For frequencies above or below 30Mhz, approximations, as for connectors, must be made. It should be noted that the performance specified at 30MHz in Table 6 for different cable types is the maximum that is allowed using TE's standard Q.C. values. Actual performance may be up to 20dB better.

Connector Accessories and Transitions

In constructional terms the performance of the connector accessory includes both the resistive terminations to the cable shield and the connector. However, it is most unusual to specify the performance of an accessory and this is a distinct weakness in the design of harnesses. The reason is that the performance is extremely variable as accessories have to fit a variety of different cable sizes and shapes. Where specified at all the relationship between the test method and the coupling mechanism for the EMI must be considered.

Table 6 - Cable Performances

Type of Screen	Diameter under screen (mm)	Surface transfer Impedance Zt @ 30 Mhz (maximum)
Single optimized braid	Up to 7.5	100 milli ohms/metre
	7.6 and up	50 milli ohms/metre
Double optimized braid	Up to 7.5	10 milli ohms/metre
	7.6 and up	5 milli ohms/metre
Superscreened (2 braids + 1 wrap)	Up to 7.5	100 micro ohms/metre
	7.6 and up	50 micro ohms/metre

Integrated Military Harness Systems (Continued)

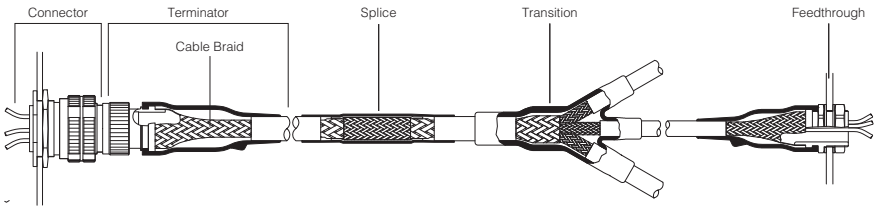

Complete Harness

When considering the complete harness the coupling calculations are relatively simple. In general terms they are the addition of all the individual leakages within the system from connector to connector. The analysis route is therefore as follows:

1. Convert all decibel values at the desired frequency to surface transfer impedance.
2. Choose components for a 'balanced' system, i.e. the components should have approximately the same performance.
3. Add the values determined for surface transfer impedance of the components at the frequency chosen.
4. Reconvert to decibels if necessary. (Table 5 can be used for this purpose)

As a guide to the shielding performance that can be expected from a harness that is constructed using Raychem brand components, Table 7 on the next page has been compiled to help in the product selection process.

For branched harnesses it is necessary to determine whether every branch has the same susceptibility requirements or carries the same signals of power. The performance requirement of each branch is then determined and the matrix for the harness established. This is a more complex subject and not discussed here. System improvements may be achieved by changing either the connectors or cable. In general terms changing from a single to a double optimized braid improves the performance of that component by 20-25 dB. A similar advantage is achieved by changing from MIL-C-26482 Series II to MIL-C-38999 Series I connectors. However, the relative significance, as part of the system, of each component must be considered to determine the true weighting effect. For the optimum in system design a balance of component performances should be achieved wherever possible such that each of the components is of similar performance level.

General Considerations

Although cables and harnesses are considered to be the most significant in terms of coupling into systems the construction of equipment boxes can play an important part in the overall EMI performance of a system. With the increasing use of high speed digital circuits and the generation of harmonics having high energy content relatively short printed circuit board tracks can radiate or pick up energy as efficiently as cables. If the boxes themselves are not adequately protected these circuits may constitute an EMI threat. There is a further area of significance in the EMI protection of the boxes and this is the connector/box interface. The junction may be considered to be a part of the harness system and any degradation in it may cause an overall harness degradation.

Catalog 1654025
Revised 3-13

www.te.com

Dimensions are shown for reference purposes only. Specifications subject to change.

Dimensions are in millimeters unless otherwise specified.

USA: +1 800 522 6752
Asia Pacific: +86 0 400 820 6015
UK: +44 800 267 666

For additional support numbers please visit www.te.com

Integrated Military Harness Systems (Continued)

Table 7 - Screen System Guide

Harness System Components													
Shielding Level Required	Connector	Adapter Styles		Termination		Cable Braid (max. length in m/ft) (by cable construction)					Transition	Splice	Feed-through
		Band Strap	Braided	Tinel-Lock System	Rayaten Assembly	NO	SO	DO	SSS	DSS			
<60 dB	VG95328 VG95234	■	■	■	—	<2/6.5	15/49	100/328	—	—	Shield tape & Solder-Sleeve device	Solder-Sleeve device	Tinel or solder devices
60 to 80 dB	MIL-C-26482 Series 2 VG96912 Series 1	—	—	■	—	—	<2/6.5	7/22.9	100/328	—	Shield tape & Solder-Sleeve device	Solder-Sleeve device	Tinel or Rayaten assembly
>80 dB	MIL-C-38999	—	—	—	■	—	—	<0.5/1.6	50/164	65/213	Not recom-mended	Solder-Sleeve device	Tinel or Rayaten assembly

NO = Non Optimized, SO = Single Optimized, DO = Double Optimized, SSS = Single Super Shield, DSS = (TE must provide info)
Note:
1. The cable lengths are to be used as a guide.
   Outside 30 MHz, the lengths that can be used will vary. For specific harness design outside 30 MHz, please consult TE.
2. Tinel-Lock use at shielding levels of 60–80 dB depends on the adapter entry, cable braid size, and design. For further details, contact TE.
3. Connectors commonly used but not mentioned in the table may not have a stated shielding performance in their specification. Contact the manufacturer for guidance.
4. This guide makes no allowance for the possible effects of resonance. TE should be consulted for advice on compensating for resonance.

Step 4. Select Components

Using the previous sections, you can now select all of the components for an integrated harness assembly.

Please refer to the sections listed for more detailed component information:

Tubing . . . . . .Section 3
Molded Parts . . . . . .Section 4
Adhesives . . . . . .Section 5
Adapters . . . . . .Section 6
Assemblies . . . . . .Section 7
Electrical Interconnect Products . . . . . .Section 8
Wire and Cable . . . . . .Section 9

Catalog 1654025
Revised 3-13

www.te.com

Dimensions are shown for reference purposes only. Specifications subject to change.

Dimensions are in millimeters unless otherwise specified.

USA: +1 800 522 6752
Asia Pacific: +86 0 400 820 6015
UK: +44 800 267 666

For additional support numbers please visit www.te.com

Table of Contents

Overview 3-3
Tubing Selection Guide 3-4, 3-5, 3-6, 3-7
Specification Cross-Reference Guide 3-8, 3-9
Tubing Categories 3-10

ATUM	High-shrink-ratio, adhesive-lined polyolefin tubing	3-11, 3-12
BSTS/BSTS-FR	General purpose, heat-shrinkable tubing	3-13, 3-14
CGPE-105	Brightly colored, shiny, non-flame-retardant polyolefin tubing	3-15, 3-16
CGPT	General purpose, flame-retardant, polyolefin tubing	3-17, 3-18
CRN	Semirigid, flame-retardant, polyolefin tubing	3-19, 3-20
DCPT	Flexible, flame-retardant, dual-color, polyolefin tubing	3-21, 3-22
DR-25	Heat-shrinkable, flexible, chemical and abrasion resistant tubing	3-23, 3-24
DR-25-TW	Heat-shrinkable, flexible, thin wall, chemical and abrasion resistant tubing	3-25, 3-26
DWP-125	Flexible, high-shrink-ratio, adhesive-lined, polyolefin tubing	3-27, 3-28
ES1000	Clear, high-shrink-ratio, adhesive-lined, semirigid polyolefin tubing	3-29. 3-30
ES2000	Flame-retardant, high-shrink-ratio, adhesive-lined, semirigid polyolefin tubing	3-31, 3-32
ES Caps	High-shrink-ratio, adhesive-lined, semirigid polyolefin caps	3-33, 3-34
FL2500	Fully flame-retardant, adhesive-lined, polyolefin heat-shrinkable tubing	3-35, 3-36
HCTE	Helical convolex tubing with a high crush resistance	3-37, 3-38
HF	High-flex, heavy-wall, heat-shrinkable tubing	3-39, 3-40
HFT5000	Heat-shrinkable fabric tubing	3-41, 3-42
HRHF/HRNF/HRSR	High-ratio, heat-shrinkable tubing	3-43, 3-44
HRHT	High-ratio, high-temperature, flexible, thick wall polyolefin heat-shrinkable tubing	3-45, 3-46
HTAT	Semiflexible, dual wall, moisture-resistant tubing	3-47, 3-48
Maulflex Conduit System	Lightweight, flexible, abrasion-resistant, shielded electrical conduit	3-49, 3-50
NT	Flexible, general purpose modified elastomeric tubing	3-51, 3-52
NT-MIL	Flexible, rugged, modified elastomeric tubing	3-53, 3-54
NTFR	Very flexible, rugged neoprene elastomer tubing	3-55, 3-56
PD Caps	Semirigid, encapsulant-lined, polyolefin caps	3-57, 3-58
PTCM	Very high-shrink-ratio, dual wall, flexible heat-shrinkable tubing	3-59, 3-60
RayBlock 85	Heat-shrinkable water-blocking system	3-61, 3-62
RayBlock 105	Heat-shrinkable water-blocking system	3-63, 3-64
Rayrim	Commercial protective, self-adhering, edging material	3-65, 3-66
RaySpool	Convenient packaging and dispensing system for heat-shrinkable tubing	3-67, 3-68, 3-69
RHW	Rugged, heavy wall, adhesive-lined, polyolefin heat-shrinkable tubing	3-70, 3-71
RMW	Medium wall, polyolefin heat-shrinkable tubing	3-72, 3-73
RNF-100	Flexible, flame-retardant, general purpose, polyolefin tubing	3-74, 3-75

Catalog 1654025
Revised 3-13

www.te.com

Dimensions are shown for reference purposes only. Specifications subject to change.

Dimensions are in millimeters unless otherwise specified.

USA: +1 800 522 6752
Asia Pacific: +86 0 400 820 6015
UK: +44 800 267 666

For additional support numbers please visit www.te.com

Table of Contents (Continued)

RNF-150	High-performance, flame-resistant, flexible, fluoropolymer tubing	3-76, 3-77
RNF-3000	Flexible, high-shrink-ratio, flame-retardant, general purpose, polyolefin tubing	3-78, 3-79
RP-4800	High-shrink-ratio, flame-retardant, polyolefin tubing	3-80, 3-81
RPPM	Flexible, dual wall, moisture proof, heat-shrinkable tubing	3-82, 3-83
RT-3	Semirigid, flame-retardant, polyolefin tubing	3-84, 3-85
RT-375	Clear, flame-resistant, flexible, fluoropolymer tubing	3-86, 3-87
RT555	Fluid-resistant, chemical-resistant, crosslinked fluoropolymer tubing with extended temperature range	3-88, 3-89
High Temperature Sealing Sleeves	High temperature, heat shrinkable, fluid resistant sealing sleeves	3-90, 3-91
RT-770	NBCCS Harness Tubing	3-92, 3-93
RT-780	NBCCS Harness Tubing	3-94, 3-95
RT-790	NBCCS Harness Tubing	3-96, 3-97
RW-175	High-temperature, chemical-resistant, polyvinylidene fluoride tubing	3-98, 3-99
RW-200/RW-200-E	Heat-shrinkable, chemical-resistant, high-temperature tubing	3-100, 3-101
SCL	Semirigid, encapsulant-lined, polyolefin tubing	3-102, 3-103
SCT	Flame-retardant, adhesive-lined, semirigid polyolefin heat-shrinkable tubing (extended temperature range}	3-104, 3-105
SFR	Very flexible, flame-retardant, silicone elastomer tubing	3-106, 3-107
SRFR	Highly flexible, silicone rubber tubing	3-108, 3-109
SST/SST-FR	Self-sealing, heat-shrinkable tubing	3-110, 3-111
TAT-125	Adhesive-lined, flexible polyolefin tubing	3-112, 3-113
TC Caps	Semirigid, flame-retardant polyolefin caps	3-114, 3-115
TFE and TFE-R	High-temperature, chemically inert, modified tubing made of PTFE® Fluoropolymer	3-116, 3-117
Tubing Kits and MiniSpools	Smaller packaging options for single wall and adhesive-lined tubing products	3-118, 3-119
URHT	Ultra high-ratio, flame-retardant, polyolefin heat-shrinkable tubing	3-120, 3-121
Versafit	Highly flame-retardant, very flexible, low-shrink-temperature, polyolefin tubing	3-122, 3-123
Versaflex	Expandable, braided, polyester sleeving	3-124, 3-125
XFFR	Halogen-free, flame-retardant, heat-shrinkable tubing	3-126, 3-127
ZH-100	Flexible, thin-wall, low-fire-hazard tubing	3-128, 3-129
ZHTM	Heat-shrinkable, flexible tubing with low toxicity for fire safety applications	3-130, 3-131

Overview

TE Connectivity's Raychem brand of tubing was developed when our scientists pioneered the application of radiation crosslinking and the development of heat-shrinkable polymer products. Today TE is recognized worldwide for its expertise in these areas.

The Raychem brand of tubings are made of polyolefins, fluoropolymers, and elastomers enhanced by radiation crosslinking and heat-shrinkability. When heated during installation, our tubings shrink to conform to virtually any shape. They provide dependable insulation, mechanical protection, and strain relief, as well as aesthetic appeal.

Single wall tubings are available in thin-wall, medium-wall, and thick-wall versions. With dual wall tubings, an inner wall — either an encapsulant or an adhesive — melts and flows during installation heating, to protect against environmental damage. Encapsulants protect connections and components from splashes and corrosion. Adhesives go a step further, sealing to plastic, metal, rubber, or other substrates.

You can choose from tubings that are highly flexible or semirigid, designed for operation in high- or low-temperature environments, halogen-free and flame-retardant to meet a range of industry standards.

Available in many sizes, constructions, lengths, and colors to meet commercial, military or medical specifications, our tubings can also be customized for special applications.

Installation is fast and easy with handheld heating tools or bench-mounted heaters. A range of automatic and semi-automatic installation equipment is available for high-volume applications.

Catalog 1654025
Revised 3-13

www.te.com

Dimensions are shown for reference purposes only. Specifications subject to change.

Dimensions are in millimeters unless otherwise specified.

USA: +1 800 522 6752
Asia Pacific: +86 0 400 820 6015
UK: +44 800 267 666

For additional support numbers please visit www.te.com

Tubing Selection Guide

		PRODUCT	Polyolefin	Fluoropolymer	Elastomer	Operating Temperature °C / [°F]		Min. shrink temperature (°C)	Min. full recovery temperature (°C)	Shrink ratio
Single Wall	Very flexible	Versafit	•			-55 to 135	[-67 to 275]	70	90	2:1
	Flexible	CGPE-105	•			-70 to 105	[-94 to 221]	85	110	2:1
		CGPT	•			-40 to 135	[-40 to 275]	80	120	2:1
		DCPT	•			-55 to 135	[-67 to 275]	95	120	2:1
		RNF-100	•			-55 to 135	[-67 to 275]	95	121	2:1
		RNF-3000	•			-55 to 135	[-67 to 275]	80	120	3:1
		RP-4800	•			-55 to 135	[-67 to 275]	95	121	4:1
	Semirigid	CRN	•			-55 to 135	[-67 to 275]	110	135	2:1
		RT-3	•			-55 to 135	[-67 to 275]	110	135	2.5:1
Dual wall	Semiflexible	ATUM	•			-55 to 110	[-67 to 230]	80	110	3:1
[adhesive-and										4:1
encapsulant-lined]		DWP-125	•			-40 to 110	[-40 to 230]	80	125	3:1
		HTAT	•			-55 to 125	[-67 to 257]	80	110	4:1
	Flexible	PTCM	•			-40 to 85	[-40 to 185]	60	80	6:1
		RPPM	•			-40 to 85	[-40 to 185]	60	80	4:1
		TAT-125	•			-55 to 110	[-67 to 230]	95	121	2:1
	Semirigid	ES1000	•			-40 to 130	[-40 to 266]	110	135	4:1
		ES2000	•			-40 to 130	[-40 to 266]	110	135	4:1
		FL2500	•			-40 to 135	[-40 to 275]	110	135	4:1
		SCL	•			-55 to 110	[-67 to 230]	125	135	3:1
		SCT	•			-40 to 150	[-40 to 302]	110	135	4:1
Heavy Duty		BSTS/BSTS-FR	•			-55 to 90	[-67 to 194]	90	121	3:1
		HF	•			-55 to 90	[-67 to 194]	80	121	3:1
		HRHF/HRNF/HRSR	•			-55 to 90	[-67 to 194]	80	121	5.6:1
		RHW	•			-55 to 110	[-67 to 230]	110	125	3:1
		RMW	•			-55 to 110	[-67 to 230]	110	125	3:1
		SST/SST-FR	•			-55 to 90	[-67 to 194]	90	121	3:1
Special Purpose	Elastomers	DR-25			•	-75 to 150	[-103 to 302]	150	175	2:1
		HRHT								
		NT			•	-55 to 90	[-67 to 194]	90	135	1.8:1
		NT-MIL			•	-70 to 121	[-94 to 250]	90	135	1.8:1
		NTFR			•	-70 to 121	[-94 to 250]	90	135	2:1
		RW-200			•	-40 to 200	[-40 to 392]	100	175	2:1
		RW-200-E			•	-55 to 200	[-67 to 392]	100	175	2:1
		SFR			•	-75 to 180	[-103 to 356]	135	175	1.75:1
		SRFR			•	-75 to 200	[-103 to 392]	135	175	1.5:1
		URHT								
	Fluoropolymers	RNF-150		•		-55 to 150	[-67 to 302]	110	150	2:1
		RT-375		•		-55 to 150	[-67 to 302]	125	150	2:1
		RT555		•		-65 to 200	[-85 to 392]	150	220	2:1
		RT-770				-55 to 125	[-67 to 257]	135	150	2:1
		RT-780				-55 to 175	[-67 to 347]	180	200	2:1
		RT-790				-55 to 200	[-67 to 392]	235	250	2:1
		RW-175		•		-55 to 175	[-67 to 347]	155	175	2:1
		TFE and TFE-R		•		-67 to 250	[-89 to 482]	330	340	1.8:1/ 3.2:1
	Caps	ES Caps	•			-40 to 105	[-40 to 221]	100	135	4:1
		PD Caps	•			-55 to 110	[-67 to 230]	125	135	3:1
		TC Caps	•			-55 to 135	[-67 to 275]	110	135	2.5:1

*For specific MIL-Spec information for each product, refer to individual product pages or the Tubing Cross-Reference Guide on page 3-8.

**Sizes 9/3 through 70/21 only. †Clear is not flame-retardant.

Dimensions are shown for reference purposes only. Specifications subject to change.

Dimensions are in millimeters unless otherwise specified.

USA: +1 800 522 6752
Asia Pacific: +86 0 400 820 6015
UK: +44 800 267 666

For additional support numbers please visit www.te.com

Tubing Selection Guide (Continued)

Size range (inside diameter as supplied)	Colored	Clear	Flame-retardant	UL 224	CSA	VW-1 (UL/CSA)	MIL Spec*	USP Class VI	ABS	UL D486**	DESCRIPTION
3/64" to 4"	•		•	•	•	•	•				Highly flame-retardant, multi-spec polyolefin
3/64" to 2"	•	•									Brightly colored, general purpose polyolefin
1.6 mm to 38 mm	•	•	•	•	•						General purpose, flame-retardant polyolefin†
3 mm to 38 mm	•		•	•	•						Green and yellow striped polyolefin
3/64" to 5"	•	•	•	•	•		•				High-performance flexible polyolefin†
1.5 mm to 39 mm	•	•	•	•	•		•				3:1 shrink ratio general-purpose polyolefin†
3/4" to 4 1/2"	•		•	•			•				4:1 shrink ratio polyolefin
3/64" to 3/4"	•	•	•	•	•		•				Flame-retardant polyolefin†
.240" to .485"	•		•	•	•						Semirigid polyolefin for terminal insulation
3 mm to 40 mm	•	•	•	•			•				3:1 and 4:1 shrink ratio adhesive-lined polyolefin†
4 mm to 52 mm	•		•	•							
1/8" to 1"	•		•	•	•						3:1 shrink ratio adhesive-lined polyolefin
4 mm to 48 mm	•		•								High-temperature adhesive-lined polyolefin9 mm
	•										Very high shrink ratio, dual wall, flexible polyolefin tubing
4 mm to 16 mm	•	•									Dual wall, moisture-proof polyolefin
1/8" to 1 1/2"	•	•	•	•			•				2:1 adhesive-lined polyolefin†
.225" to .700"		•		•							Clear high-shrink-ratio adhesive-lined polyolefin
.225" to .700"	•		•	•							Flame-retardant adhesive-lined polyolefin
.300" to .700"	•		•								Fully flame-retardant, adhesive-lined polyolefin
1/8" to 1"	•			•			•				3:1 shrink ratio encapsulant-lined polyolefin
.300" to .700"	•		•								High-temperature adhesive-lined polyolefin
.3" to 4.5"	•	•	•						•		Rugged, general purpose, thick-wall polyolefin†
.4" to 2.7"	•		•						•		Highly flexible, thick-wall polyolefin
.6" to 4"	•		•						•		High-shrink-ratio repair sleeve
9 mm to 180 mm	•									•	Heavy wall adhesive-lined polyolefin
10 mm to 180 mm	•										Medium wall polyolefin
.3" to 4.5"	•		•				•		•		Self-sealing, dual wall polyolefin
1/8" to 3"	•		•				•				Diesel-resistant elastomer
1/8" to 4"	•		•								Flexible general-purpose modified elastomer
1/8" to 4"	•		•				•				Flexible rugged modified elastomer
1/8" to 3"	•		•				•				Very flexible rugged neoprene
1/8" to 2"	•		•				•				High-temperature flexible elastomer
1/8" to 2"	•		•				•				High-temperature flexible elastomer
1/4" to 2"	•		•				•				Very flexible silicone
2.9 mm to 51 mm	•		•	•		•					Very flexible silicone rubber
3/64" to 1"	•		•	•		•	•				High-performance flexible fluoropolymer
3/64" to 1 1/2"	•	•	•	•	•	•	•				Clear high-performance flexible fluoropolymer
1/8" to 2"	•		•	•		•					Fluid- and chemical-resistant fluoropolymer
3/64" to 1 1/2"	•	•	•	•	•	•	•				High-performance fluoropolymer
0.8 mm to 11.9 mm/		•	•				•				High-temperature PTFE® fluoropolymer resin
2 mm to 32 mm											
1/8" to 2"			•								NBCCS tubing rated to 125˚C
1/8" to 2"			•								NBCCS tubing rated to 175˚C
1/8" to 2"			•								NBCCS tubing rated to 200˚C
1/16" to 1"	•	•						•			Autoclavable semirigid fluoropolymer
.225" to .427"	•	•	•	•							High-ratio, adhesive-lined caps†
1/8" to 1/2"	•			•							Semirigid encapsulant-lined polyolefin caps
1/16" to 1/4"	•		•	•							Semirigid flame-retardant polyolefin caps

PTFE is a trademark of E. I. du Pont de Nemours and Company.

Catalog 1654025
Revised 3-13

www.te.com

Dimensions are shown for reference purposes only. Specifications subject to change.

Dimensions are in millimeters unless otherwise specified.

USA: +1 800 522 6752
Asia Pacific: +86 0 400 820 6015
UK: +44 800 267 666

For additional support numbers please visit www.te.com

Tubing Selection Guide (Continued)

PRODUCT			Polyolefin	Fluoropolymer	Elastomer	Operating Temperature °C / [°F]		Min. shrink temperature (°C)	Min. full recovery temperature (°C)	Shrink ratio
Special Purpose	Conduit	HCTE		•		-55 to 200	[-67 to 392]	N/A	N/A	N/A
(Continued)	Kits	RayBlock 85	•			-40 to 85	[-40 to 185]	80	110	4:1
		RayBlock 105	•			-40 to 105	[-40 to 221]	80	110	4:1
		Tubing Kits and Mini-Spools	•			Various; see page 139-140		See page 139-140	See page 139-140	2:1 up to 4:1
	Low Toxicity	XFFR	•			-55 to 105	[-67 to 221]	70	121	3:1
		ZH-100	•			-30 to 105	[-22 to 221]	80	120	2:1
		ZHTM	•			-30 to 105	[-22 to 221]	80	121	2:1
	Edging Matl	Rayrim	•			-55 to 80	[-67 to 176]	120	150	N/A
	Fiber & Fabric	HFT5000				-40 to 125	[-40 to 257]	80	110	2:1
	Braids	Versaflex				-50 to 150	[-58 to 302]	N/A	N/A	N/A

*For specific MIL-Spec information for each product, refer to individual product pages or the Tubing Cross-Reference Guide on page 3-8.

**Sizes 9/3 through 70/21 only. †Clear is not flame-retardant.

Dimensions are shown for reference purposes only. Specifications subject to change.

Dimensions are in millimeters unless otherwise specified.

USA: +1 800 522 6752
Asia Pacific: +86 0 400 820 6015
UK: +44 800 267 666

For additional support numbers please visit www.te.com

Tubing Selection Guide (Continued)

Size range (inside diameter as supplied)	Colored	Clear	Flame-retardant	UL 224	CSA	VW-1 (UL/CSA)	MIL Spec*	USP Class VI	ABS	UL D486**	DESCRIPTION
.187" to 2"	•		•								Modified ETFE, helically convoluted tubing
12 mm to 32 mm	•		•								Heat-shrinkable water blocking system
12 mm to 32 mm	•		•								Heat-shrinkable water blocking system
See page 139-140	•	•	•	•	•	•	•				Smaller packaging options for single wall and adhesive-lined tubing
.4" to 3"	•		•						•		Halogen-free, flame-retardant polyolefin
1/8" to 2"	•		•								Thin-wall, low-fire-hazard polyolefin
3 mm to 40 mm	•		•								Low toxicity, flexible polyolefin
0.8 mm to 4.5 mm	•										Protective self-adhering edging material
12 mm to 80 mm	•										Heat-shrinkable, fabric tubing
3 mm to 50 mm	•										Expandable, braided polyester sleeving

Catalog 1654025
Revised 3-13

www.te.com

Dimensions are shown for reference purposes only. Specifications subject to change.

Dimensions are in millimeters unless otherwise specified.

USA: +1 800 522 6752
Asia Pacific: +86 0 400 820 6015
UK: +44 800 267 666

For additional support numbers please visit www.te.com

Specification Cross-Reference Guide

Product Type	UL File	CSA File	AMS-DTL-23053* Sheet	AMS-DTL-23053* Class	MIL-PRF-46846 Type	MIL-PRF-46846 Class	TE Specification	Page No.
ATUM	E85381**		/4	3			RW-2063 & RK-6024	3-11
BSTS							RW-2017	3-13
BSTS-FR			/15	1 & 2***			RW-2017	3-13
CGPE-105							CGPE-105 SCD	3-15
CGPT	E35586	LR31929					RW-2059	3-17
CRN Type 1 (colors)	E35586	LR31929†	/6	1			RT-360, Type 1	3-19
CRN Type 2 (clear)			/6	2			RT-360, Type 2	3-19
DCPT	E35586	LR31929					RW-2056	3-21
DR-25			/16				RT-1116	3-23
DWP-125	E35586	LR31929					DWP-125 SCD	3-25
ES1000	E85381						RT-1113	3-27
ES2000	E85381						RT-1112	3-29
ES Caps	E85381						RW-3006	3-31
FL2500							FL2500 SCD	3-33
HCTE							RT-1162	3-35
HF			/15	1***			RW-2023	3-37
HFT5000	E199379						RW-2060	3-39
HRHF							RW-2013	3-41
HRNF							RW-2013	3-41
HRSR							RW-2013	3-41
HRHT							HRHT SCD	3-43
HTAT							RW-2052	3-45
NT							RT-510	3-47
NT-MIL			/1	1 & 2			RW-3030	3-49
NTFR							RT-511	3-51
PD Caps	E85381						PD Caps SCD	3-53
PTCM							RK-6768	3-55
RayBlock 85							RW-2101	3-57
RayBlock 105							RW-2102	3-59
Rayrim Edging Material							RK-6182	3-61
RaySpool								3-63
RHW	E91151***						RHW SCD	3-66
RMW							RMW SCD	3-68
RNF-100 Type 1 (colors)	E35586	LR31929	/5	1			RT-350, Type 1	3-70
RNF-100 Type 2 (clear)			/5	2			RT-350, Type 2	3-70
RNF-150	E35586 VW-1		/18	2			RT-370	3-72
RNF-3000	E35586	LR31929					RW-2053	3-74
RP-4800	E35586		/5	1††			RT-1122	3-76
RPPM							RK-6214	3-78
RT-3	E35586	LR31929†					RT-360†††	3-80
RT-375	E35586 VW-1	LR31929 VW-1	/18	2			RT-375	3-82
RT555	E85381						RT-555	3-84
RT-770								3-86
RT-780								3-88
RT-790								3-90
RW-175	E35586 VW-1	LR31929 VW-1	/8				RW-3029	3-92
RW-200			/13				RT-1146	3-94
RW-200-E							RK-6014/1	3-94
SCL	E85381		/4	1			RT-1301	3-96
SCT							SCT SCD	3-98
SFR			/10		II	1	RT-1140	3-100
SRFR	E85381 VW-1						RW-2057	3-102
SST							RW-2011	3-104
SST-FR			/15	1 & 2			RW-2011	3-104
TAT-125 Type 1 (colors)	E85381		/4	2			RW-3032	3-106

Dimensions are shown for reference purposes only. Specifications subject to change.

Dimensions are in millimeters unless otherwise specified.

USA: +1 800 522 6752
Asia Pacific: +86 0 400 820 6015
UK: +44 800 267 666

For additional support numbers please visit www.te.com

Specification Cross-Reference Guide (Continued)

Product Type	UL File	CSA File	AMS-DTL-23053* Sheet	AMS-DTL-23053* Class	MIL-PRF-46846 Type	MIL-PRF-46846 Class	TE Specification	Page No.
TAT-125 Type 2 (clear)							RW-3032	3-106
TC Caps	E85381						TC Caps SCD	3-108
TFE/TFE-R							RW-2054, RW-2055	3-110
Tubing Kits							Various	3-112
URHT					II		URHT SCD	3-114
Versafit	E35586 VW-1	LR31929 VW-1	/5	1 & 3			RW-3009	3-116
Versaflex							RK-6772	3-118
Versaflex-FR	E306976							3-118
XFFR							RW-2016	3-120
ZH-100							RW-2031	3-122
ZHTM							RW-2058	3-124

*Formerly MIL-I-23053 and MIL-DTL-23053 **Black only, except sizes 3/1 and 4/1. ***Sizes 9/3 through 70/21 only.

†Black only †† Overexpanded †††With exception to dimensions and longitudinal change.

Catalog 1654025
Revised 3-13

www.te.com

Dimensions are shown for reference purposes only. Specifications subject to change.

Dimensions are in millimeters unless otherwise specified.

USA: +1 800 522 6752
Asia Pacific: +86 0 400 820 6015
UK: +44 800 267 666

For additional support numbers please visit www.te.com

Tubing Categories

	Type	Product Name		
Single Wall	Very Flexible	Versafit		
	Flexible	CGPE-105 CGPT	DCPT RNF-100	RNF-3000 RP-4800
	Semirigid	CRN	RT-3	
Dual Wall	Semi-flexible	ATUM	DWP-125	HTAT
	Flexible	PTCM	RPPM	TAT-125
	Semirigid	ES1000 ES2000	FL2500 SCL	SCT
Heavy Duty		BSTS/BSTS-FR HF	HRHT HRHF/HRNF/HRSR RMW	RHW SST/SST-FR URHT
Special Purpose	Elastomers	DR-25 DR-25TH NT NT-MIL	NTFR RW-200 RW-200-E	SFR SRFR UPB
	Fluoropolymers	RNF-150 RT-375 RT555	RT-770 RT-780 RT-790	RW-175 RY-780 TFE and TFE-R
	Caps	ES Caps PD Caps	TC Caps	
	Conduit	HCTB	Maulflex	
	Kits	RayBlock 85 RayBlock 105	RaySpool Tubing Kits and Mini-Spools	
	Low toxicity	XFFR	ZH-100	ZHTM
	Edging material	Rayrim		
	Fiber and fabric	HFT5000		
	Braid	Versaflex		

Dimensions are shown for reference purposes only. Specifications subject to change.

Dimensions are in millimeters unless otherwise specified.

USA: +1 800 522 6752
Asia Pacific: +86 0 400 820 6015
UK: +44 800 267 666

For additional support numbers please visit www.te.com

ATUM

High-Shrink-Ratio, Adhesive-Lined Polyolefin Tubing

Product Facts

- 3:1 and 4:1 shrink ratios allow for connector-to-cable sealing
- Tubing environmentally seals and protects components and interconnections
- Medium wall provides increased mechanical protection
- The adhesive in ATUM tubing bonds to a wide variety of plastics, rubbers, and metals, including polyethylene, aluminum, steel, and copper
- RoHS compliant

Applications

Environmentally seals and protects a wide variety of electrical applications, including back end connector sealing, breakouts, and connector-to-cable transitions. High expansion ratio makes it possible to repair most damaged cable jackets without removing connectors.

Installation

Minimum shrink temperature: 80°C [176°F]

Minimum full recovery temperature: 110°C [230°F]

Operating Temperature Range

-55°C to 110°C
[-67°F to 230°F]

Specifications/Approvals

Series	UL**	Military	TE
ATUM	E85381 600V, 110°C	AMS-DTL-23053/4,* Class 3	RW-2063 — Black RK-6024 — Colors and clear

*Formerly MIL-I-23053/4 and MIL-DTL-23053/4. Sizes 3/1, 6/2, 12/4, 24/8, and 40/13 only.
**Black only, except sizes 3/1 and 4/1.

Available in:	Americas	Europe	Asia Pacific
	■	■	■

Catalog 1654025
Revised 3-13

www.te.com

Dimensions are shown for reference purposes only. Specifications subject to change.

Dimensions are in millimeters unless otherwise specified.

USA: +1 800 522 6752
Asia Pacific: +86 0 400 820 6015
UK: +44 800 267 666

For additional support numbers please visit www.te.com

ATUM (Continued)

Product Dimensions

Size	Inside Diameter		Recovered Wall Thickness**	
	Minimum Expanded as Supplied	Maximum Recovered After Heating	Total Wall After Heating	Adhesive Wall After Heating (Nominal)
3:1				
3/1	3.0 [0.118]	1.0 [0.039]	1.00 ± 0.28 [0.039 ± 0.010]	0.50 [0.020]
4.5/1.5	4.5 [0.177]	1.5 [0.059]	1.10 ± 0.25 [0.043 ± 0.011]	0.50 [0.020]
6/2	6.0 [0.236]	2.0 [0.079]	1.00 ± 0.28 [0.039 ± 0.010]	0.50 [0.020]
9/3	9.0 [0.354]	3.0 [0.118]	1.40 ± 0.28 [0.055 ± 0.010]	0.61 [0.024]
12/4	12.0 [0.472]	4.0 [0.157]	1.78 ± 0.38 [0.070 ± 0.015]	0.76 [0.030]
19/6	19.0 [0.748]	6.0 [0.236]	2.25 ± 0.55 [0.088 ± 0.022]	0.76 [0.030]
24/8	24.0 [0.940]	8.0 [0.315]	2.54 ± 0.55 [0.100 ± 0.022]	1.02 [0.040]
40/13	40.0 [1.570]	13.0 [0.512]	2.54 ± 0.55 [0.100 ± 0.022]	1.02 [0.040]
4:1				
4/1	4.0 [0.157]	1.0 [0.039]	1.00 ± 0.28 [0.039 ± 0.010]	0.50 [0.020]
8/2	8.0 [0.315]	2.0 [0.079]	1.00 ± 0.28 [0.039 ± 0.010]	0.50 [0.020]
12/3	12.0 [0.472]	3.0 [0.118]	1.40 ± 0.28 [0.055 ± 0.010]	0.61 [0.024]
16/4	16.0 [0.630]	4.0 [0.157]	1.78 ± 0.38 [0.070 ± 0.015]	0.76 [0.030]
24/6	24.0 [0.945]	6.0 [0.236]	2.25 ± 0.55 [0.088 ± 0.022]	0.76 [0.030]
32/8	32.0 [1.260]	8.0 [0.315]	2.54 ± 0.55 [0.100 ± 0.022]	1.02 [0.040]
52/13	52.0 [2.050]	13.0 [0.512]	2.54 ± 0.55 [0.100 ± 0.022]	1.02 [0.040]

**Wall thickness will be less if tubing recovery is restricted during shrinkage.

Ordering Information

Color	Standard	Black (-0)
	Nonstandard	Clear in 3:1 sizes only (-X, non-flame-retardant jacket); other colors available on request.
Size selection	Always order the largest size that will shrink snugly over the component to be covered. Special order sizes are available upon request.	
Standard packaging***	In 1.2-meter [4-foot] lengths or on spools.	
Ordering description****	Specify product name, size and color (for example, ATUM 8/2-0).	

***Only 1.2 meter [4-foot] lengths are standard in the Americas. ATUM tubing on spools is nonstandard.
****For supply to MIL spec., add -MS to ordering description.

BSTS/BSTS-FR

General Purpose, Heat-Shrinkable Tubing

Product Facts

- **Excellent thick-wall insulation and abrasion protection**
- **No adhesive – can be removed easily**
- **Expansion ratios as high as 3:1**
- **Availability in flame-retardant material with FR callout (see "Ordering information and Part numbering system" on the next page)**
- **BSTS has the following agency approvals:**
  - **ABS (American Bureau of Shipping)**
  - **Lloyd's (Lloyd's Register of Shipping)**
- **RoHS compliant**

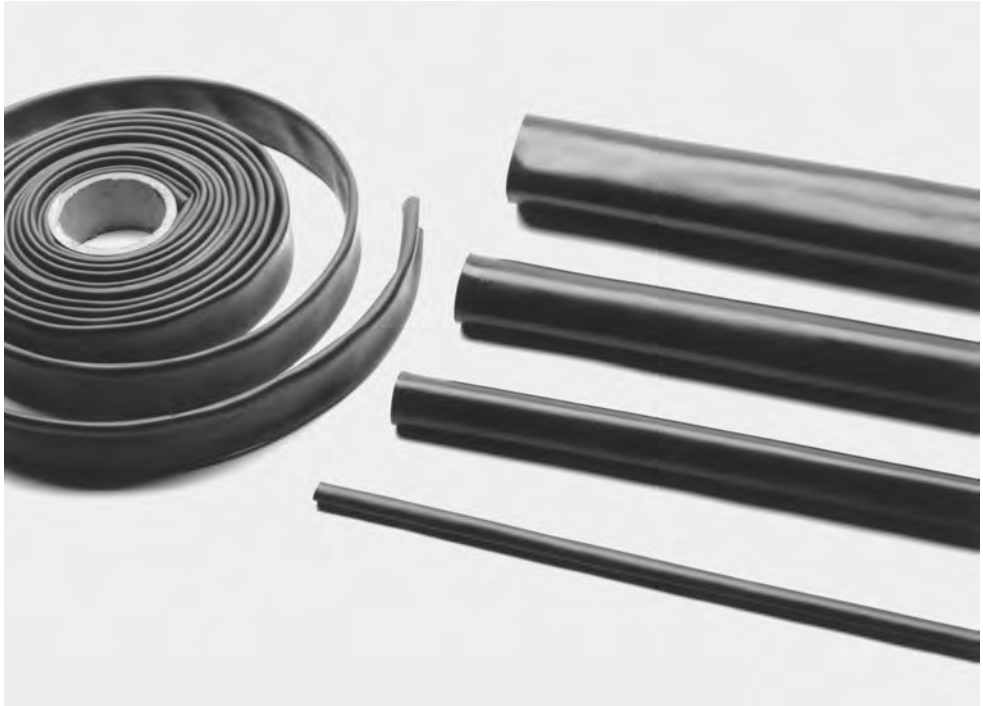

Applications

BSTS heat-shrinkable tubing is made of a rugged polymer that resists moisture, fungus, and weathering. It also has excellent electrical properties. This tubing is useful in applications where insulation, abrasion resistance, and strain relief are important. When used with sealant tape (S-1305 for flame-retardant or S-1278 for non-flame-retardant), it can provide a watertight system in nonpressurized applications.

Installation

Minimum shrink temperature: 90°C [194°F]

Minimum full recovery temperature: 121°C [250°F]

Operating Temperature Range

-55°C to 110°C
[-67°F to 230°F]

Specifications/Approvals

Series	Military	Industry	TE
BSTS	—	—	RW-2017
BSTS-FR	AMS-DTL-23053/15*, Class 1 and Class 2**	ASTM D 685, nonburning	RW-2017

*Formerly MIL-I-23053/15 and MIL-DTL-23053/15.
**Except for coatings requirement. Refer to SST-FR when coating is required.

Available in:	Americas	Europe	Asia Pacific
	■	■	■

Catalog 1654025
Revised 3-13

www.te.com

Dimensions are shown for reference purposes only. Specifications subject to change.

Dimensions are in millimeters unless otherwise specified.

USA: +1 800 522 6752
Asia Pacific: +86 0 400 820 6015
UK: +44 800 267 666

For additional support numbers please visit www.te.com

BSTS/BSTS-FR (Continued)

Product Dimensions

Size	Inside Diameter		Wall Thickness (Nominal)	
	Minimum Expanded as Supplied	Maximum Recovered After Heating	Expanded as Supplied	Recovered After Heating***
BSTS-03	7.62 [0.300]	2.54 [0.100]	0.63 [0.025]	1.78 [0.070]
BSTS-04	10.16 [0.400]	3.81 [0.150]	0.63 [0.025]	1.78 [0.070]
BSTS-07	19.05 [0.750]	5.59 [0.220]	0.76 [0.030]	2.41 [0.095]
BSTS-11	27.94 [1.100]	9.52 [0.375]	1.02 [0.040]	3.05 [0.120]
BSTS-13	33.02 [1.300]	9.52 [0.375]	0.89 [0.035]	3.05 [0.120]
BSTS-15	38.10 [1.500]	12.70 [0.500]	1.27 [0.050]	3.56 [0.140]
BSTS-17	43.18 [1.700]	12.70 [0.500]	1.14 [0.045]	3.56 [0.140]
BSTS-20	50.80 [2.000]	19.05 [0.750]	1.27 [0.050]	3.94 [0.160]
BSTS-27	65.58 [2.700]	22.86 [0.900]	1.27 [0.050]	3.94 [0.160]
BSTS-30	76.20 [3.000]	31.75 [1.250]	1.27 [0.050]	3.94 [0.160]
BSTS-35	88.90 [3.500]	31.75 [1.250]	1.27 [0.050]	3.94 [0.160]
BSTS-40	101.60 [4.000]	44.45 [1.750]	1.27 [0.050]	3.94 [0.160]
BSTS-45	114.30 [4.500]	44.45 [1.750]	1.27 [0.050]	3.94 [0.160]

***Wall thickness will be less if tubing recovery is restricted during shrinkage.

Ordering Information

Color	Standard	Black
	Nonstandard	White, Yellow, Red and Clear (Clear is non-flame retardant)
Size selection	Always order the largest size that will shrink snugly over the component to be covered. Special order sizes are available upon request.	
Standard packaging	1.2-meter [4-foot] or 7.5-meter [25-foot] lengths.	
Ordering description	See below.	

Part Numbering System

BSTS - _ _ x _ _ / _ / _

- **"NM"** - no mark
- **Color**
  - Black / leave blank (standard)
  - White / WHT
  - Red / RED
  - Clear / CL
- **"FR"** - flame-retardant
- **Length** in feet (4 and 25 feet standard)
- **"M"** medium wall
- **Size**
- **Family**

Example: BSTS-11X4/NM

Catalog 1654025
Revised 3-13

www.te.com

Dimensions are shown for reference purposes only. Specifications subject to change.

Dimensions are in millimeters unless otherwise specified.

USA: +1 800 522 6752
Asia Pacific: +86 0 400 820 6015
UK: +44 800 267 666

For additional support numbers please visit www.te.com

CGPE-105

Brightly Colored, Shiny, Non-Flame-Retardant Polyolefin Tubing

Product Facts

- Bright, shiny surface; clear version offers exceptional clarity
- Can be easily hot-stamped
- Economical, yet offers the improved performance of a crosslinked material
- Conforms to substrates more uniformly and with less longitudinal change than most PVC-based materials
- RoHS compliant

Applications

Attractive covering for many automotive, appliance, and consumer-goods applications. Commercial grade tubing for applications where a flame-retardant product is not needed. Provides both insulation and protection of components and wires while also providing a smooth, glossy finish with a choice of seven colors as well as clear. Exceptional transparency of clear CGPE-105 makes it a well-suite choice for protecting marked surfaces.

Installation

Minimum shrink temperature: 85°C [185°F]

Minimum full recovery temperature: 110°C [230°F] for black; 100°C [212°F] for all other colors and clear

Operating Temperature Range

-70°C to 105°C
[-94°F to 221°F]

Specifications/Approvals

Series	TE
CGPE-105	CGPE-105 SCD

Available in:	Americas	Europe	Asia Pacific
	■		■

Catalog 1654025
Revised 3-13

www.te.com

Dimensions are shown for reference purposes only. Specifications subject to change.

Dimensions are in millimeters unless otherwise specified.

USA: +1 800 522 6752
Asia Pacific: +86 0 400 820 6015
UK: +44 800 267 666

For additional support numbers please visit www.te.com

CGPE-105 (Continued)

Product Dimensions

Size	Inside Diameter		Recovered Wall Thickness**
	Minimum Expanded as Supplied	Maximum Recovered After Heating	After Heating
3/64	1.2 [0.046]	0.6 [0.023]	0.40 ± 0.08 [0.016 ± 0.003]
1/16	1.6 [0.063]	0.8 [0.031]	0.43 ± 0.08 [0.017 ± 0.003]
3/32	2.4 [0.093]	1.2 [0.046]	0.51 ± 0.08 [0.020 ± 0.003]
1/8	3.2 [0.125]	1.6 [0.062]	0.51 ± 0.08 [0.020 ± 0.003]
3/16	4.8 [0.187]	2.4 [0.093]	0.51 ± 0.08 [0.020 ± 0.003]
1/4	6.4 [0.250]	3.2 [0.125]	0.64 ± 0.08 [0.025 ± 0.003]
3/8	9.5 [0.375]	4.8 [0.187]	0.64 ± 0.08 [0.025 ± 0.003]
1/2	12.7 [0.500]	6.4 [0.250]	0.64 ± 0.08 [0.025 ± 0.003]
3/4	19.1 [0.750]	9.5 [0.375]	0.76 ± 0.08 [0.030 ± 0.003]
1	25.4 [1.000]	12.7 [0.500]	0.89 ± 0.12 [0.035 ± 0.005]
1 1/2	38.1 [1.500]	19.1 [0.750]	1.02 ± 0.15 [0.040 ± 0.006]
2	50.8 [2.000]	25.4 [1.000]	1.14 ± 0.18 [0.045 ± 0.007]

**Wall thickness will be less if tubing recovery is restricted during shrinkage.

Ordering Information

Color	Black (-0), White (-9), Clear (-X), Red (-2), Bue (-6), Yellow (-4) Green (-5), Violet (-7)
Size selection	Always order the largest size that will shrink snugly over the component to be covered. Special order sizes are available upon request.
Standard packaging	On spools.
Ordering description	Specify product name, size and color (for example, CGPE-105-1/4-0).

CGPT

General Purpose, Flame-Retardant* Polyolefin Tubing

Product Facts

- 2:1 and 3:1 shrink ratio
- Very good chemical and solvent resistance
- Flexible
- Excellent physical and electrical performance
- RoHS compliant

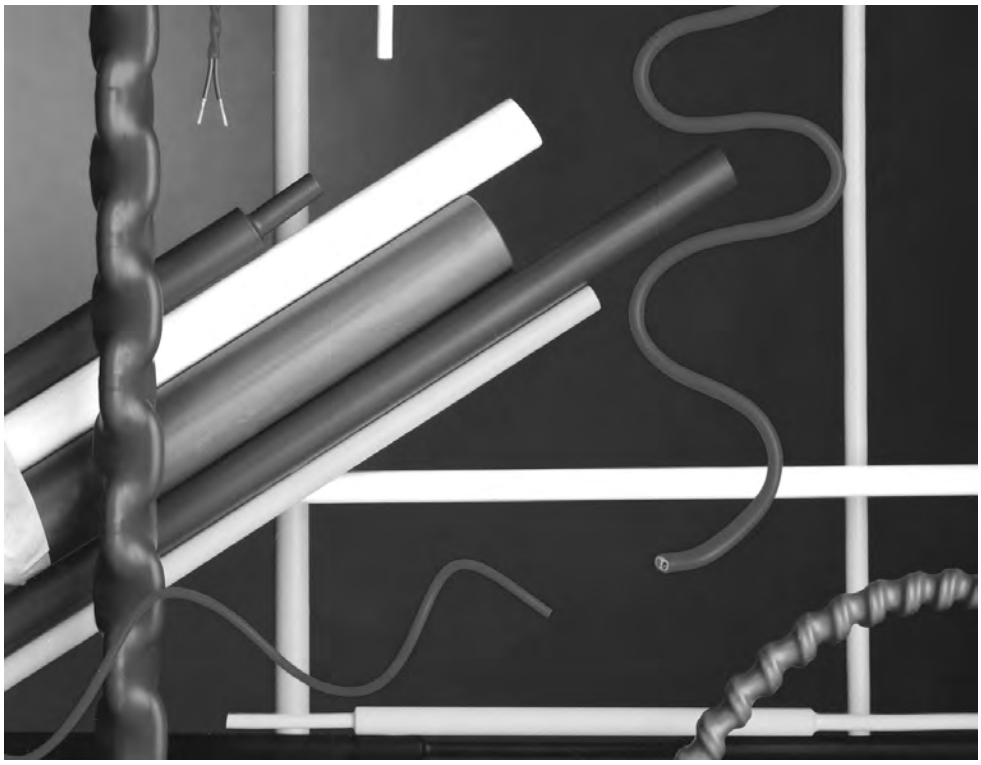

Applications

CGPT is a tough, flexible, general purpose polyolefin tubing with good resistance to common fluids and solvents and a high dielectric strength. Its unique blend of chemical, electrical, and physical properties makes it suitable for a wide range of applications, including electrical insulation, strain relief, cable bundling, color-coding and identification of wires, cables, pipes, and electrical and electronic components, and mechanical protection.

Installation

Minimum shrink temperature: 80°C [176°F]

Minimum full recovery temperature: 120°C [248°F]

Operating Temperature Range

-40°C to 135°C
[-40°F to 275°F]

Specifications/Approvals

Series	UL	CSA	TE
CGPT	E35586 600 V, 125°C	LR31929 600 V, 125°C	RW-2059

*Clear product (-X) is not flame-retardant.

Available in:	Americas	Europe	Asia Pacific
		■	

Catalog 1654025
Revised 3-13

www.te.com

Dimensions are shown for reference purposes only. Specifications subject to change.

Dimensions are in millimeters unless otherwise specified.

USA: +1 800 522 6752
Asia Pacific: +86 0 400 820 6015
UK: +44 800 267 666

For additional support numbers please visit www.te.com

CGPT (Continued)

Product Dimensions

Size	Inside Diameter		Recovered Wall Thickness**
	Minimum Expanded as Supplied	Maximum Recovered After Heating	After Heating
2:1			
1.2/06	1.2 [0.046]	0.6 [0.023]	0.45 ± 0.12 [0.018 ± 0.005]
1.6/0.8	1.6 [0.062]	0.8 [0.031]	0.45 ± 0.12 [0.018 ± 0.005]
2.4/1.2	2.4 [0.093]	1.2 [0.046]	0.50 ± 0.12 [0.019 ± 0.005]
3.2/1.6	3.2 [0.125]	1.6 [0.062]	0.50 ± 0.12 [0.019 ± 0.005]***
4.8/2.4	4.8 [0.187]	2.4 [0.093]	0.50 ± 0.12 [0.019 ± 0.005]***
6.4/3.2	6.4 [0.250]	3.2 [0.125]	0.65 ± 0.15 [0.026 ± 0.006]***
9.5/4.8	9.5 [0.375]	4.8 [0.187]	0.65 ± 0.15 [0.026 ± 0.006]***
12.7/6.4	12.7 [0.500]	6.4 [0.250]	0.65 ± 0.15 [0.026 ± 0.006]***
19/9.5	19.0 [0.748]	9.5 [0.375]	0.75 ± 0.15 [0.029 ± 0.006]***
25.4/12.7	25.4 [1.000]	12.7 [0.500]	0.90 ± 0.20 [0.035 ± 0.008]***
32/16	32.0 [1.250]	16.0 [0.630]	0.95 ± 0.20 [0.037 ± 0.008]
38/19	38.0 [1.496]	19.0 [0.748]	1.00 ± 0.20 [0.039 ± 0.008]***
51/26	51.0 [2.000]	26.0 [1.000]	1.15 ± 0.25 [0.045 ± 0.010]
76/38	76.0 [2.992]	38.0 [1.496]	1.25 ± 0.25 [0.049 ± 0.010]
102/51	102.0 [4.016]	51.0 [2.008]	1.40 ± 0.30 [0.055 ± 0.012]
3:1			
1.5/0.5	1.5 [0.059]	0.5 [0.020]	0.45 ± 0.12 [0.018 ± 0.005]
3/1	3.0 [0.118]	1.0 [0.040]	0.55 ± 0.12 [0.022 ± 0.005]
6/2	6.0 [0.236]	2.0 [0.079]	0.65 ± 0.12 [0.026 ± 0.005]
9/3	9.0 [0.354]	3.0 [0.118]	0.75 ± 0.15 [0.030 ± 0.006]
12/4	12.0 [0.472]	4.0 [0.157]	0.75 ± 0.15 [0.030 ± 0.006]
18/6	18.0 [0.709]	6.0 [0.236]	0.85 ± 0.15 [0.033 ± 0.006]
24/8	24.0 [0.945]	8.0 [0.315]	1.00 ± 0.20 [0.039 ± 0.008]
39/13	39.0 [1.540]	13.0 [0.512]	1.15 ± 0.25 [0.045 ± 0.010]

**Wall thickness will be less if tubing recovery is restricted during shrinkage.

Ordering Information

Color	Standard	Black (-0), White (-9), Red (-2), Blue (-6), Yellow (-4), Green (-5), Brown (-1), Grey (-8), Clear (-X), Yellow/Green (-45) as indicated by an ***
	Nonstandard	Orange (-3), Violet (-7), in 2:1 sizes, 1.2/0.6 through 51/26 only.
Size selection	Always order the largest size that will shrink snugly over the component to be covered. Special order sizes are available upon request.	
Standard packaging****	On spools.	
Ordering description	Specify product name, size and color (for example, CGPT 4.8/2.4-0).	

****Available in the convenient RaySpool packaging/dispensing system for sizes:
2:1 - 2.4/1.2 up to 25.4/12.7
3:1 - 3/1 up to 24/8

CRN

Semirigid, Flame-Retardant, Polyolefin Tubing

Product Facts

- 2:1 shrink ratio
- High abrasion resistance
- Transfer of flex stress away from typically weak points such as solder and crimp joints, helping ensure a reliable connection
- Flame-retardance (black only)
- Outstanding physical and electrical performance
- Excellent chemical and solvent-resistance properties
- RoHS compliant

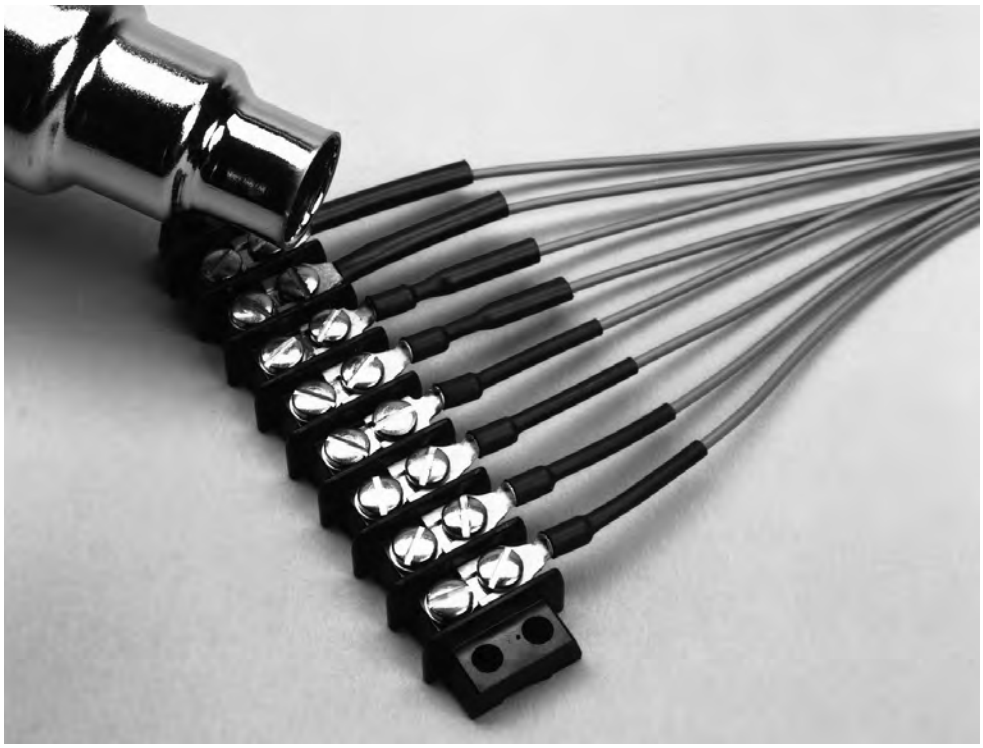

Applications

Well-suited for wire strain-relief applications such as soldered or crimped connections, wire splices, and terminations. Provides mechanical protection for delicate components. Can be used for component packaging and for rugged marking of cables.

Installation

Minimum shrink temperature: 110°C [230°F]

Minimum full recovery temperature: 135°C [275°F]

Operating Temperature Range

-55°C to 135°C
[-67°F to 275°F]

Specifications/Approvals

Series	UL	CSA	Military	TE
CRN Type 1 (black)	E35586 600 V, 125°C	LR31929 (black only) 600 V, 125°C	AMS-DTL-23053/6*, Class I	RT-360, Type 1 RK-6003
CRN Type 2 (clear)	—	—	AMS-DTL-23053/6*, Class 2	RT-360, Type 2

*Formerly MIL-I-23053/6 and MIL-DTL-23053/6.

Available in:	Americas	Europe	Asia Pacific
	■	■	■

Catalog 1654025
Revised 3-13

www.te.com

Dimensions are shown for reference purposes only. Specifications subject to change.

Dimensions are in millimeters unless otherwise specified.

USA: +1 800 522 6752
Asia Pacific: +86 0 400 820 6015
UK: +44 800 267 666

For additional support numbers please visit www.te.com

CRN (Continued)

Product Dimensions

Size	Inside Diameter		Recovered Wall Thickness**
	Minimum Expanded as Supplied	Maximum Recovered After Heating	After Heating
3/64	1.2 [0.046]	0.6 [0.023]	0.51 ± 0.08 [0.020 ± 0.003]
1/16	1.6 [0.063]	0.8 [0.031]	0.51 ± 0.08 [0.020 ± 0.003]
3/32	2.4 [0.093]	1.2 [0.046]	0.51 ± 0.08 [0.020 ± 0.003]
1/8	3.2 [0.125]	1.6 [0.062]	0.51 ± 0.08 [0.020 ± 0.003]
3/16	4.8 [0.187]	2.4 [0.093]	0.64 ± 0.08 [0.025 ± 0.003]
1/4	6.4 [0.250]	3.2 [0.125]	0.64 ± 0.08 [0.025 ± 0.003]
3/8	9.5 [0.375]	4.8 [0.187]	0.76 ± 0.08 [0.030 ± 0.003]
1/2	12.7 [0.500]	6.4 [0.250]	0.76 ± 0.08 [0.030 ± 0.003]
3/4	19.1 [0.750]	9.5 [0.375]	0.89 ± 0.12 [0.035 ± 0.005]

**Wall thickness will be less if tubing recovery is restricted during shrinkage.

Ordering Information

Color	Standard	Black (-0)
	Nonstandard	Clear (-X, not flame-retardant)
Size selection	Always order the largest size that will shrink snugly over the component to be covered. Special order sizes are available upon request.	
Standard packaging	In 1.2-meter [4-foot] lengths.	
Ordering description***	Specify product name, size and color (for example, CRN 1/4-0).	

***Europe only. For supply to MIL spec., add -MS to ordering description.

Dimensions are shown for reference purposes only. Specifications subject to change.

Dimensions are in millimeters unless otherwise specified.

USA: +1 800 522 6752
Asia Pacific: +86 0 400 820 6015
UK: +44 800 267 666

For additional support numbers please visit www.te.com

DCPT

Flexible, Flame-Retardant, Dual-Color, Polyolefin Tubing

Product Facts

- 2:1 and 3:1 shrink ratio
- Dual colors (yellow/green) for instant identification
- Co-extrusion of tubing colors, giving color permanence superior to that of conventional ink marking
- Flame-retardance
- Flexibility: able to conform to irregular shapes
- Excellent physical, chemical, and electrical properties that meet industry standards for highly reliable, general purpose tubing
- RoHS compliant

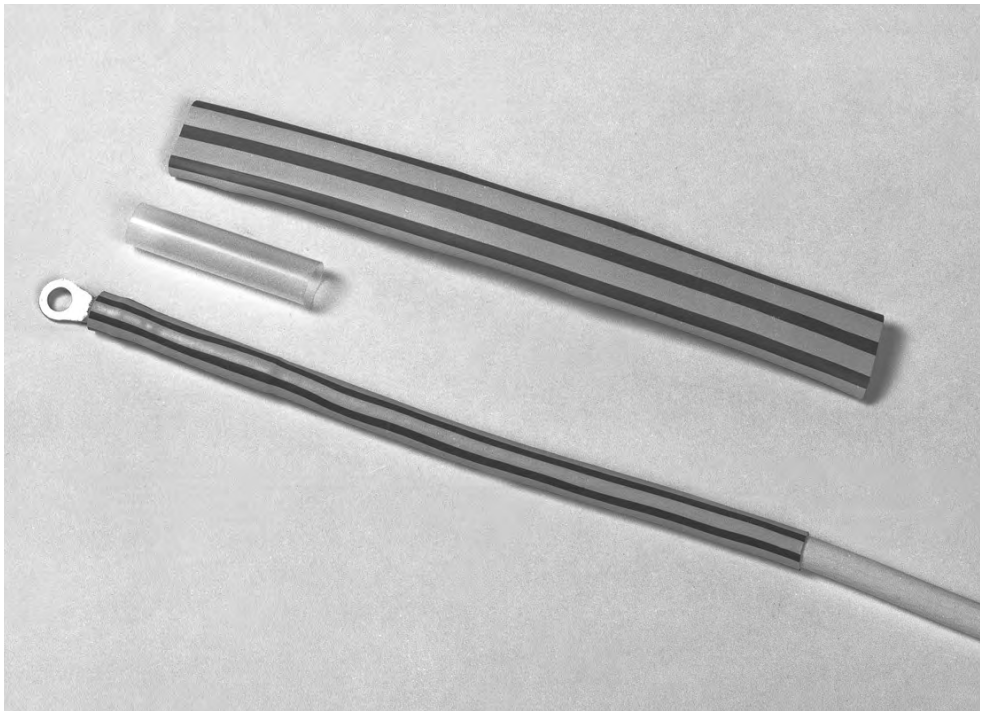

Applications

Used to identify “ground” on wires and in cables, and to jacket and insulate light-duty harnesses.

Easily marked by conventional techniques for additional identification of wires and cables.

Installation

Minimum shrink temperature: 95°C [203°F]

Minimum full recovery temperature: 120°C [248°F]

Operating Temperature Range

-55°C to 135°C
[-67°F to 275°F]

Specifications/Approvals

Series	UL	CSA	Military	Agency	TE
DCPT	E35586 600 V, 125°C	LR31929 600 V, 125°C	VG 95343 Pt 5 Type A	AFS 2270 DIN 29807 VDE 0341 Pt 9005 Type A	RW-2056

Available in:	Americas	Europe	Asia Pacific
	■	■	■

Catalog 1654025
Revised 3-13

www.te.com

Dimensions are shown for reference purposes only. Specifications subject to change.

Dimensions are in millimeters unless otherwise specified.

USA: +1 800 522 6752
Asia Pacific: +86 0 400 820 6015
UK: +44 800 267 666

For additional support numbers please visit www.te.com

DCPT (Continued)

Product Dimensions

Size	Inside Diameter		Recovered Wall Thickness**
	Minimum Expanded as Supplied	Maximum Recovered After Heating	After Heating
2:1			
3/1.5	3.0 [0.118]	1.5 [0.059]	0.51 ± 0.10 [0.020 ± 0.004]
6/3	6.0 [0.236]	3.0 [0.118]	0.58 ± 0.10 [0.023 ± 0.004]
8/4	8.0 [0.315]	4.0 [0.158]	0.64 ± 0.10 [0.025 ± 0.004]
10/5	10.0 [0.394]	5.0 [0.197]	0.64 ± 0.10 [0.025 ± 0.004]
12/6	12.0 [0.472]	6.0 [0.236]	0.64 ± 0.10 [0.025 ± 0.004]
19/9	19.0 [0.748]	9.0 [0.354]	0.76 ± 0.12 [0.030 ± 0.005]
26/13	26.0 [1.024]	13.0 [0.512]	0.89 ± 0.12 [0.035 ± 0.005]
38/19	38.0 [1.500]	19.0 [0.748]	1.00 ± 0.12 [0.039 ± 0.005]
51/19	51.0 [2.000]	19.0 [0.748]	1.02 ± 0.15 [0.040 ± 0.006]
3:1 (Europe only)			
3/1	3.0 [0.118]	1.0 [0.039]	0.55 ± 0.10 [0.022 ± 0.004]
6/2	6.0 [0.236]	2.0 [0.079]	0.65 ± 0.10 [0.026 ± 0.004]
9/3	9.0 [0.354]	3.0 [0.118]	0.75 ± 0.15 [0.030 ± 0.006]
12/4	12.0 [0.472]	4.0 [0.157]	0.75 ± 0.15 [0.030 ± 0.006]
18/6	18.0 [0.709]	6.0 [0.236]	0.85 ± 0.15 [0.033 ± 0.006]
24/8	24.0 [0.945]	8.0 [0.315]	1.00 ± 0.20 [0.039 ± 0.008]
39/13	39.0 [1.535]	13.0 [0.512]	1.15 ± 0.20 [0.045 ± 0.008]

**Wall thickness will be less if tubing recovery is restricted during shrinkage.

Ordering Information

Color	Standard	Yellow/green stripe (-45)
Size selection	Always order the largest size that will shrink snugly over the component to be covered. Special order sizes are available upon request.	
Standard packaging	On spools.	
Ordering description	Specify product name, size and color (for example, DCPT 8/4-45).	

DR-25

Heat-Shrinkable, Flexible, Chemical and Abrasion Resistant Tubing

Product Facts

- Flame-retardant
- System 25 tubing
- Shrink ratio 2:1
- RoHS compliant

Applications

Specially formulated for optimum high-temperature fluid resistance, and long term heat resistance. Resistant to aviation and diesel fuels, hydraulic fluids and lubricating oils.

Particularly suitable as a jacketing material for military ground vehicle cables and harnesses. It is also well suited for the demands of motorsport cable harnesses. When used in conjunction with System 25 heat-shrinkable molded shapes and S1125 high performance adhesive, these products provide a complete cable harness system.

Installation

Minimum shrink temperature: 150°C [302°F]

Minimum full recovery temperature: 175°C [347°F]

Operating Temperature Range

-75°C to 150°C
[-103°F to 302°F]
(per VG 95343 Part 5 Type D)

Specifications/Approvals

Series	Military	TE
DR-25	AMS-DTL-23053/16* VG95343 Part 5 Type D VDE 0341/Pt 9005 Def Stan 59-97 Issue 3 Type 6B BS 4G-198 Part 3 10A	RT-1116 RK-6008/1

*Formerly MIL-I-23053/16 and MIL-DTL-23053/16.

Available in:	Americas	Europe	Asia Pacific
	■	■	■

Catalog 1654025
Revised 3-13

www.te.com

Dimensions are shown for reference purposes only. Specifications subject to change.

Dimensions are in millimeters unless otherwise specified.

USA: +1 800 522 6752
Asia Pacific: +86 0 400 820 6015
UK: +44 800 267 666

For additional support numbers please visit www.te.com

DR-25 (Continued)

Product Dimensions

MIL Spec No.	Size	Inside Diameter: Minimum Expanded as Supplied	Inside Diameter: Maximum Recovered After Heating	Recovered Wall Thickness** After Heating
—	1/8	3.2 [0.125]	1.6 [0.062]	0.76 ± 0.15 [0.030 ± 0.006]
—	3/16	4.8 [0.187]	2.4 [0.093]	0.84 ± 0.15 [0.033 ± 0.006]
-001	1/4	6.4 [0.250]	3.2 [0.125]	0.89 ± 0.15 [0.035 ± 0.006]
-002	3/8	9.5 [0.375]	4.8 [0.187]	1.02 ± 0.20 [0.040 ± 0.008]
-003	1/2	12.7 [0.500]	6.4 [0.250]	1.22 ± 0.20 [0.048 ± 0.008]
-004	3/4	19.0 [0.748]	9.5 [0.375]	1.45 ± 0.28 [0.057 ± 0.011]
-005	1	25.4 [1.000]	12.7 [0.500]	1.78 ± 0.28 [0.070 ± 0.011]
-006	1 1/2	38.0 [1.500]	19.1 [0.750]	2.41 ± 0.41 [0.095 ± 0.016]
-007	2	51.0 [2.000]	25.4 [1.000]	2.79 ± 0.41 [0.110 ± 0.016]
-008	3	76.0 [3.000]	38.0 [1.500]	3.18 ± 0.50 [0.125 ± 0.020]
-009	4	101.6 [4.000]	50.8 [2.00]	3.55 ± 0.50 [0.140 ± 0.020]

**Wall thickness will be less if tubing recovery is restricted during shrinkage.

Ordering Information

Color	Standard Black (-0)
Size selection	Always order the largest size that will shrink snugly over the component to be covered. Special order sizes are available upon request.
Standard packaging	On spools.
Ordering description***	Specify product name, size and color (for example, DR-25 1/8-0)

***Europe only. For supply to Def Stan and BS add -DS or -BS to ordering description.

DR-25-TW

Heat-Shrinkable, Flexible, Thin Wall, Chemical and Abrasion Resistant Tubing

The DR-25-TW flexible fluid resistant elastomeric tubing, developed from DR-25, is a thin wall version ideal for use where space and weight saving are important. It also offers excellent resistance to fluids at high temperature and to long-term heat exposure. It is fast to install and may be used with other products from the TE Raychem System 25 range of compact and tough harnessing systems. The product is printed with the product description and size.

Key Features

- **Operating temperature range -75˚C to +150˚C (-103˚F to +302˚F) (per VG 95343 Part 5 Type D)**
- **Flame-retardant**
- **System 25 tubing**
- **Shrink ratio 2:1**
- **Thin wall**

Applications

Specially formulated for optimum high temperature fluid resistance and long term heat resistance. Resistant to aviation and diesel fuels, hydraulic fluids and lubricating oils. Particularly suitable as a jacketing material for military ground vehicle cables and harnesses. It is also ideally suited for the demands of motorsport cable harnesses. When used in conjunction with Raychem brand System 25 heat-shrinkable moulded shapes and S1125 high performance adhesive, these products provide a complete cable harness system.

Installation

Minimum shrink temperature: 125°C [257°F]

Minimum full recovery temperature: 175°C [347°F]

Specifications/Approvals

Series	Military	Raychem
DR-25-TW	VG95343 Part 5 Type D	RK-6008/2

Available in:	Americas	Europe	Asia Pacific
	■	■	■

Catalog 1654025
Revised 3-13

www.te.com

Dimensions are shown for reference purposes only. Specifications subject to change.

Dimensions are in millimeters unless otherwise specified.

USA: +1 800 522 6752
Asia Pacific: +86 0 400 820 6015
UK: +44 800 267 666

For additional support numbers please visit www.te.com

DR-25-TW (Continued)

Product Dimensions

Size	Inside Diameter		Recovered Wall Thickness
	Minimum Inside Diameter as Supplied	Maximum Inside Diameter After Recovery	
3/32	2.4 (0.094)	1.2 (0.047)	0.51 ± 0.08
1/8	3.2 (0.125)	1.6 (0.062)	0.51 ± 0.10
3/16	4.8 (0.187)	2.4 (0.093)	0.51 ± 0.10
1/4	6.4 (0.250)	3.2 (0.125)	0.64 ± 0.10
3/8	9.5 (0.375)	4.8 (0.187)	0.64 ± 0.10
1/2	12.7 (0.500)	6.4 (0.250)	0.64 ± 0.10
3/4	19.0 (0.748)	9.5 (0.375)	0.76 ± 0.12
1	25.4 (1.000)	12.7 (0.500)	0.89 ± 0.16
1 1/2	38.0 (1.500)	19.0 (0.748)	1.02 ± 0.18

Ordering Information

Color	Standard Black (-0)
Size selection	Always order the largest size that will shrink snugly over the component to be covered. Special order sizes are available upon request.
Standard packaging	On spools
Ordering description	Specify product name, size and color (for example, DR-25-TW-1/8-0-SP).

Dimensions are shown for reference purposes only. Specifications subject to change.

Dimensions are in millimeters unless otherwise specified.

USA: +1 800 522 6752
Asia Pacific: +86 0 400 820 6015
UK: +44 800 267 666

For additional support numbers please visit www.te.com

DWP-125

Flexible, High-Shrink-Ratio, Adhesive-Lined, Polyolefin Tubing

Product Facts

- 3:1 shrink ratio allows for insulation and sealing of irregular shapes
- Medium wall provides increased mechanical protection while maintaining flexibility when installed
- Adhesive bonds to a wide variety of plastics, rubber, and metals, including polyethylene, neoprene, and steel
- RoHS compliant

Applications

Environmentally seals and protects a wide variety of electrical applications, including wire splices, breakouts, and connector-to-cable transitions. Suitable for applications where UL recognized/CSA certified adhesive-lined tubing is required.

Installation

Minimum shrink temperature: 80°C [176°F]

Minimum full recovery temperature: 125°C [257°F]

Operating Temperature Range

-40°C to 110°C
[-40°F to 230°F]

Specifications/Approvals

Series	UL	CSA	Military	TE
DWP-125	E35586 600 V, 125°C	LR31929 600 V, 125°C	AMS-DTL-23053/4* Class 3 (colors only)	DWP-125 SCD

*Formerly MIL-I-23053/4 and MIL-DTL-23053/4. Meets the material properties except for Sealing Efficiency.

Available in:	Americas	Europe	Asia Pacific
	■	■	■

Catalog 1654025
Revised 3-13

www.te.com

Dimensions are shown for reference purposes only. Specifications subject to change.

Dimensions are in millimeters unless otherwise specified.

USA: +1 800 522 6752
Asia Pacific: +86 0 400 820 6015
UK: +44 800 267 666

For additional support numbers please visit www.te.com

DWP-125 (Continued)

Product Dimensions

Size	Inside Diameter		Recovered Wall Thickness*	
	Minimum Expanded as Supplied	Maximum Recovered After Heating	Nominal Total Wall After Heating	Nominal Adhesive Wall After Heating
1/8	3.2 [0.125]	1.0 [0.040]	1.07 [0.042]	0.07 [0.018]
3/16	4.8 [0.187]	1.5 [0.060]	1.32 [0.052]	0.17 [0.043]
1/4	6.4 [0.250]	2.0 [0.080]	1.45 [0.057]	0.56 [0.022]
3/8	9.5 [0.375]	3.1 [0.120]	1.65 [0.065]	0.68 [0.027]
1/2	12.7 [0.500]	4.0 [0.157]	1.70 [0.067]	0.27 [0.068]
3/4	19.1 [0.750]	5.8 [0.230]	2.03 [0.080]	0.76 [0.030]
1	25.4 [1.000]	8.1 [0.320]	2.50 [0.100]	0.76 [0.030]

*Wall thickness will be less if tubing recovery is restricted during shrinkage.

Ordering Information

Color	Standard	Black (-0)
	Nonstandard	White (-9), Red (-2), Blue (-6), Yellow (-4), Green (-5), Clear (-X, non-flame-retardant jacket). Other colors available upon request.
Size selection	Always order the largest size that will shrink snugly over the component to be covered. Special order sizes are available upon request.	
Standard packaging	In 1.2-meter [4-foot] lengths.	
Ordering description	Specify product name, size and color (for example, DWP-125 1/4-0).	

ES1000

Clear, High-Shrink-Ratio, Adhesive-Lined, Semirigid Polyolefin Tubing

Product Facts

- 4:1 shrink ratio allows a few sizes to cover a wide range of splice and component diameters
- Mechanically tough tubing provides strain relief and abrasion protection of wire splices, terminals and other components
- Thick adhesive liner forms an effective barrier against fluids and moisture and performs well at an extended temperature range
- UL recognized
- RoHS compliant

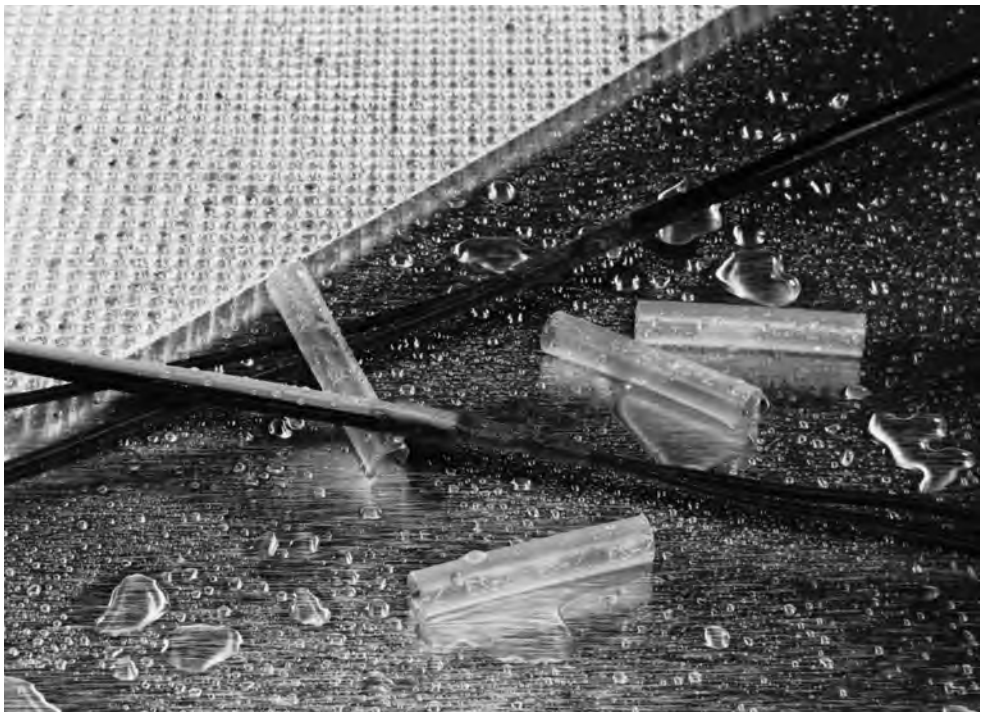

Applications

Specially designed for environmental sealing and electrical insulation of wire splices, terminations, and components where see-through inspection is required.

Installation

Minimum shrink temperature: 110°C [230°F]

Minimum full recovery temperature: 135°C [275°F]

Operating Temperature Range

-40°C to 130°C
[-40°F to 266°F]

Specifications/Approvals

Series	UL*	TE
ES1000	E85381 600 V, 125°C	RT-1113

Available in:	Americas	Europe	Asia Pacific
	■		■

Catalog 1654025
Revised 3-13

www.te.com

Dimensions are shown for reference purposes only. Specifications subject to change.

Dimensions are in millimeters unless otherwise specified.

USA: +1 800 522 6752
Asia Pacific: +86 0 400 820 6015
UK: +44 800 267 666

For additional support numbers please visit www.te.com

ES1000 (Continued)

Product Dimensions

Part Number	Inside Diameter (Including Core)		Recovered Wall Thickness*		
	Minimum Expanded as Supplied	Maximum Recovered After Heating	Minimum Total Wall After Heating	Minimum Jacket Wall After Heating	Minimum Adhesive Wall After Heating
ES1000-No.1	5.72 [0.225]	1.27 [0.050]	1.20 [0.047]	0.64 [0.025]	0.56 [0.022]
ES1000-No.2	7.44 [0.293]	1.65 [0.065]	1.52 [0.060]	0.76 [0.030]	0.76 [0.030]
ES1000-No.3	10.85 [0.427]	2.41 [0.095]	1.91 [0.075]	0.89 [0.035]	1.02 [0.040]
ES1000-No.4	17.78 [0.700]	4.45 [0.175]	2.41 [0.095]	1.04 [0.041]	1.37 [0.054]

*Wall thickness will be less if tubing recovery is restricted during shrinkage.

Ordering Information

Color	Standard Clear (-X)
Size selection	Always order the largest size that will shrink snugly over the component to be covered.
Standard packaging	Cut pieces.
Marking	Tubing will be printed with its numbered size (such as ES-1, ES-2, ES-3, or ES-4).
Ordering description	Specify product name, numbered size, color, and cut length (for example, ES1000-NO. 2-X-50MM).

Dimensions are shown for reference purposes only. Specifications subject to change.

Dimensions are in millimeters unless otherwise specified.

USA: +1 800 522 6752
Asia Pacific: +86 0 400 820 6015
UK: +44 800 267 666

For additional support numbers please visit www.te.com

ES2000

Flame-Retardant, High-Shrink-Ratio, Adhesive-Lined Semirigid Polyolefin Tubing

Product Facts

- 4:1 shrink ratio allows a few sizes to cover a wide range of splice and component diameters
- Flame-retardant and mechanically tough, the tubing provides strain relief and abrasion protection of wire splices, terminals, and other components
- Thick adhesive liner forms an effective barrier against fluids and moisture and performs well at an extended temperature range
- UL recognized
- RoHS compliant

Applications

Specially designed for environmental sealing and electrical insulation of wire splices, terminations, and components.

Installation

Minimum shrink temperature: 110°C [230°F]

Minimum full recovery temperature: 135°C [275°F]

Operating Temperature Range

-40°C to 130°C
[-40°F to 266°F]

Specifications/Approvals

Series	UL*	TE
ES2000	E85381 600 V, 125°C	RT-1112

Available in:	Americas	Europe	Asia Pacific
	■		■

Catalog 1654025
Revised 3-13

www.te.com

Dimensions are shown for reference purposes only. Specifications subject to change.

Dimensions are in millimeters unless otherwise specified.

USA: +1 800 522 6752
Asia Pacific: +86 0 400 820 6015
UK: +44 800 267 666

For additional support numbers please visit www.te.com

ES2000 (Continued)

Product Dimensions

Part Number	Inside Diameter (Including Core)		Recovered Wall Thickness*		
	Minimum Expanded as Supplied	Maximum Recovered After Heating	Minimum Total Wall After Heating	Minimum Jacket Wall After Heating	Minimum Adhesive Wall After Heating
ES2000-No.1	5.72 [0.225]	1.27 [0.050]	1.20 [0.047]	0.64 [0.025]	0.56 [0.022]
ES2000-No.2	7.44 [0.293]	1.65 [0.065]	1.52 [0.060]	0.76 [0.030]	0.76 [0.030]
ES2000-No.3	10.85 [0.427]	2.41 [0.095]	1.91 [0.075]	0.89 [0.035]	1.02 [0.040]
ES2000-No.4	17.78 [0.700]	4.45 [0.175]	2.41 [0.095]	1.04 [0.041]	1.37 [0.054]

*Wall thickness will be less if tubing recovery is restricted during shrinkage.

Ordering Information

Color	Standard Black (-0)
Size selection	Always order the largest size that will shrink snugly over the component to be covered.
Standard packaging	Cut pieces.
Marking	Tubing will be printed with its numbered size (such as ES-1, ES-2, ES-3, or ES-4).
Ordering description	Specify product name, numbered size, color, and cut length (for example, ES2000-NO. 2-0-50MM).

ES Caps

High-Shrink-Ratio, Adhesive-Lined, Semirigid Polyolefin Caps

Product Facts

- 4:1 shrink ratio allows a few sizes to cover a wide range of splice and component diameters
- Mechanically tough jacket provides strain relief and abrasion protection
- Thick adhesive liner forms an effective barrier against fluids and moisture and performs well at an extended temperature range
- RoHS compliant

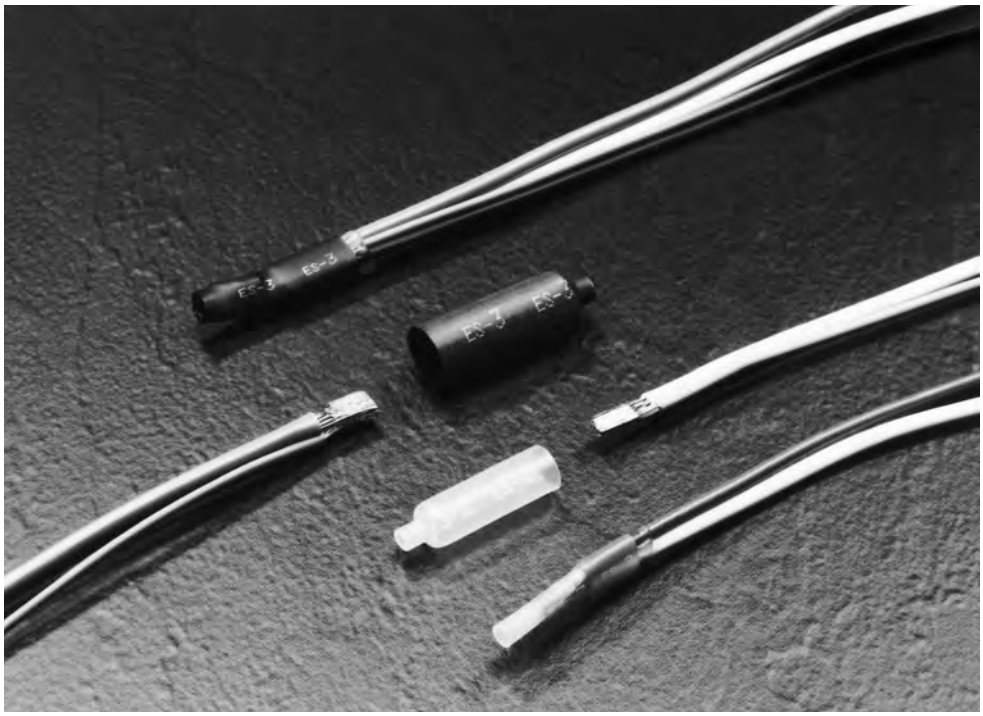

Applications

Specially designed to provide mechanical and environmental protection of stub splices in electrical harnesses. Clear caps allow see-through inspection; black caps are flame-retardant.

Installation

Minimum shrink temperature: 100°C [212°F]

Minimum full recovery temperature: 135°C [275°F]

Operating Temperature Range

-40°C to 105°C
[-40°F to 221°F]

Specifications/Approvals

Series	UL*	TE
ES Caps	E85381 600 V, 125°C	RW-3006

Available in:	Americas	Europe	Asia Pacific
	■	■	■

Catalog 1654025
Revised 3-13

www.te.com

Dimensions are shown for reference purposes only. Specifications subject to change.

Dimensions are in millimeters unless otherwise specified.

USA: +1 800 522 6752
Asia Pacific: +86 0 400 820 6015
UK: +44 800 267 666

For additional support numbers please visit www.te.com

ES Caps (Continued)

Product Dimensions

Part Number	Standard Length* as Supplied (Millimeters)	Inside Diameter (Including Core)		Recovered Wall Thickness**		
		Minimum Expanded as supplied	Maximum Recovered After Heating	Minimum Total Wall After Heating	Minimum Jacket Wall After Heating	Minimum Adhesive Wall After Heating
ES Cap-No.1	30, 35	5.72 [0.225]	1.27 [0.050]	1.20 [0.047]	0.64 [0.025]	0.56 [0.022]
ES Cap-No.2	30, 35	7.44 [0.293]	1.65 [0.065]	1.52 [0.060]	0.76 [0.030]	0.76 [0.030]
ES Cap-No.3	40, 50	10.85 [0.427]	2.41 [0.095]	1.91 [0.075]	0.89 [0.035]	1.02 [0.040]

*Other cap lengths available upon request.
**Wall thickness will be less if cap recovery is restricted during shrinkage.

Ordering Information

Color	Standard	Black (-0), clear (-X)
Size selection	Always order the largest size that will shrink snugly over the component to be covered. Other cap lengths available on request.	
Standard packaging	In pieces.	
Marking	Caps will be marked with their numbered size (such as ES-1, ES-2, or ES-3).	
Ordering description	Specify product name, size, color, and length (for example, ES CAP-NO. 2-X-35MM).	

Dimensions are shown for reference purposes only. Specifications subject to change.

Dimensions are in millimeters unless otherwise specified.

USA: +1 800 522 6752
Asia Pacific: +86 0 400 820 6015
UK: +44 800 267 666

For additional support numbers please visit www.te.com

FL2500

Fully Flame-Retardant, Adhesive-Lined, Polyolefin Heat-Shrinkable Tubing

Product Facts

- **4:1 shrink ratio allows a few sizes to cover a wide range of wire terminations and components**
- **Flame-retardant tubing jacket and adhesive provide full flame-retardancy**
- **Fully flame-retardant and mechanically tough, the tubing provides strain relief and abrasion protection of wire splices, terminals and other components**
- **Thick high-performance adhesive lining offers permanent sealing of splices, fusible links, terminals and in-line components**
- **RoHS compliant**

Applications

Tough flame-retardant polyolefin tubing lined with a flame-retardant adhesive provides the optimum solution for applications where full flame-retardancy is preferred or specified.

Rated to 135°C [275°F] for 3000 hours, FL2500 is suitable for use in the automotive harness market and other harsh environments. As the tubing shrinks, the adhesive lining melts and flows to fill all voids and create a complete seal against moisture, oils, chemicals and other fluids.

Installation

Minimum shrink temperature: 110°C [230°F]

Minimum full recovery temperature: 135°C [275°F]

Operating Temperature Range

-40°C to 135°C
[-40°F to 275°F]

Specifications/Approvals

Series	TE
FL2500	FL2500 SCD

Available in:	Americas	Europe	Asia Pacific
	■	■	■

Catalog 1654025
Revised 3-13

www.te.com

Dimensions are shown for reference purposes only. Specifications subject to change.

Dimensions are in millimeters unless otherwise specified.

USA: +1 800 522 6752
Asia Pacific: +86 0 400 820 6015
UK: +44 800 267 666

For additional support numbers please visit www.te.com

FL2500 (Continued)

Product Dimensions

Part Number	Inside Diameter (Including Core)		Recovered Wall Thickness*	
	Minimum Expanded as Supplied	Maximum Recovered After Heating	Total Wall After Heating	Minimum Adhesive Wall After Heating
FL2500-No. 1	7.62 [0.300]	1.65 [0.065]	1.52 ± 0.3 [0.060 ± 0.012]	0.71 [0.028]
FL2500-No. 2	9.02 [0.355]	2.29 [0.090]	1.52 ± 0.3 [0.060 ± 0.012]	0.71 [0.028]
FL2500-No. 3	11.56 [0.455]	2.54 [0.100]	2.29 ± 0.3 [0.090 ± 0.012]	1.32 [0.052]
FL2500-No. 4	17.79 [0.700]	4.45 [0.175]	2.54 ± 0.3 [0.100 ± 0.012]	1.35 [0.053]

*Wall thickness will be less if tubing recovery is restricted during shrinkage.

Ordering Information

Color	Black (-0) with a white adhesive liner
Size selection	Always order the largest size that will shrink snugly over the component to be covered.
Standard packaging	Cut pieces.
Marking	Tubing will be marked with its numbered size (such as FL-1, FL-2, FL-3, or FL-4).
Ordering description	Specify product name, size, color, and cut length (for example, FL2500-NO.2-0-50MM).

Dimensions are shown for reference purposes only. Specifications subject to change.

Dimensions are in millimeters unless otherwise specified.

USA: +1 800 522 6752
Asia Pacific: +86 0 400 820 6015
UK: +44 800 267 666

For additional support numbers please visit www.te.com

HCTE

Helical Convolex Tubing with a High Crush Resistance

Product Facts

- Highly flame-retardant
- Highly flexible and fluid resistant
- Not heat-shrinkable
- High crush resistance
- System 300 conduit tubing
- RoHS compliant

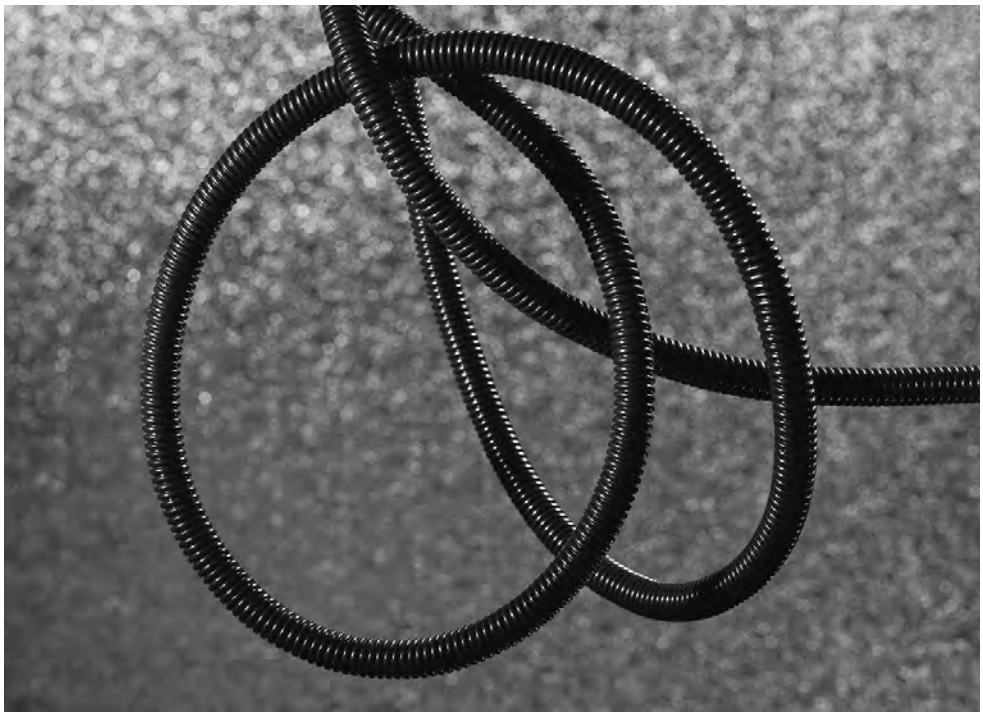

Applications

Used as a conduit to provide mechanical protection for electrical wiring systems in applications requiring flexibility, high-temperature performance and good resistance to a variety of fluids. Widely used in the military and commercial aerospace industries.
Can be used in conjunction with other Raychem brand components to form an integrated harnessing system.

Installation

It is recommended that no more than 70% of the internal area (“fill factor”) of the HCTE conduit be occupied by wires in any application.

Operating Temperature Range

-55°C to 200°C
[-67°F to 392°F]

Specifications/Approvals

Series	Military	TE
HCTE	VG 96936 Part 6	RT-1162

Available in:	Americas	Europe	Asia Pacific
	■	■	■

Catalog 1654025
Revised 3-13

www.te.com

Dimensions are shown for reference purposes only. Specifications subject to change.

Dimensions are in millimeters unless otherwise specified.

USA: +1 800 522 6752
Asia Pacific: +86 0 400 820 6015
UK: +44 800 267 666

For additional support numbers please visit www.te.com

HCTE (Continued)

Product Dimensions

Size	Inside Diameter Minimum	Outside Diameter Maximum	Maximum Wall Thickness
0187	4.60 [0.181]	8.10 [0.320]	0.46 [0.018]
0281	6.90 [0.273]	10.50 [0.414]	0.46 [0.018]
0312	7.70 [0.306]	11.80 [0.450]	0.46 [0.018]
0375	9.20 [0.364]	12.90 [0.510]	0.46 [0.018]
0437	10.80 [0.427]	14.50 [0.571]	0.46 [0.018]
0500	12.30 [0.485]	16.50 [0.650]	0.58 [0.023]
0625	15.40 [0.608]	19.50 [0.770]	0.58 [0.023]
0750	17.90 [0.730]	23.60 [0.930]	0.58 [0.023]
0875	21.80 [0.860]	27.20 [1.073]	0.58 [0.023]
1000	24.70 [0.975]	31.10 [1.226]	0.58 [0.023]
1250	30.70 [1.210]	35.30 [1.539]	0.58 [0.023]
1500	36.50 [1.437]	46.50 [1.832]	0.58 [0.023]
1625	39.60 [1.562]	50.17 [1.975]	0.58 [0.023]
1750	42.67 [1.688]	52.88 [2.082]	0.58 [0.023]
2000	49.20 [1.937]	59.23 [2.332]	0.58 [0.023]

Ordering Information

Color	Standard	Black (-0)
Size selection	Always order a conduit size that will ensure that a “fill factor” of 70% is not exceeded.	
Standard packaging	On spools.	
Ordering description	Specify product name, size and color (for example, HCTE-0187-0).	

Dimensions are shown for reference purposes only. Specifications subject to change.

Dimensions are in millimeters unless otherwise specified.

USA: +1 800 522 6752
Asia Pacific: +86 0 400 820 6015
UK: +44 800 267 666

For additional support numbers please visit www.te.com

HF

High-Flex, Heavy-Wall, Heat-Shrinkable Tubing

Product Facts

- Offers high flexibility
- Provides excellent insulation and abrasion protection, per U.S. Mine Safety and Health Administration (MSHA) regulations
- Flame-retardant
- HF has the following agency approvals:
  - ABS (American Bureau of Shipping)
  - Lloyd's (Lloyd's Register of Shipping)
- RoHS compliant

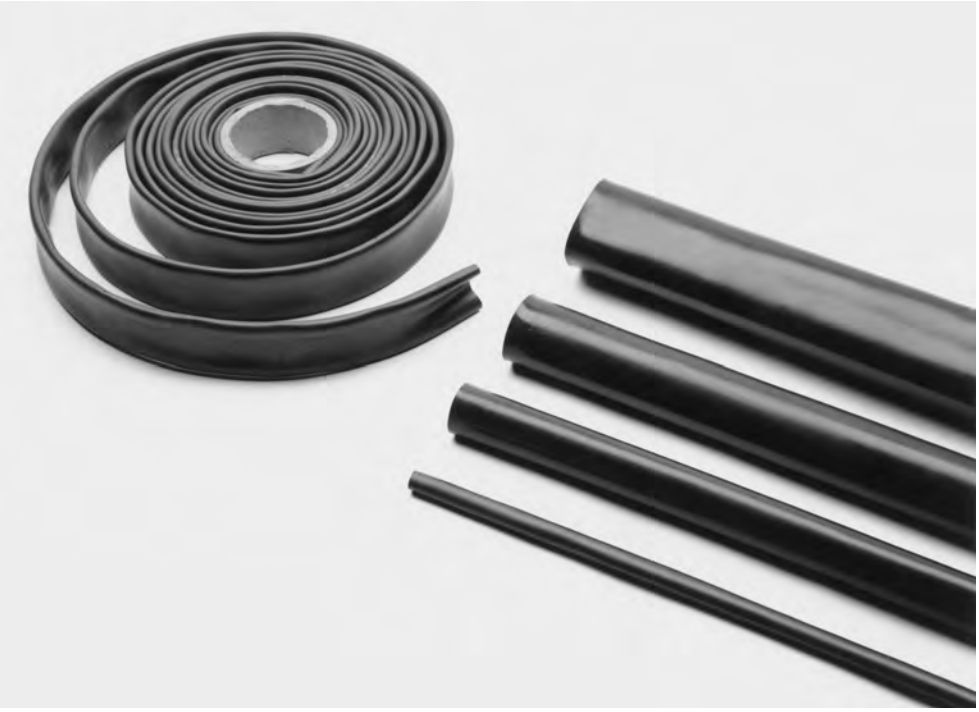

Applications

Developed for cable jacketing applications where cable flexibility is important, high-flex (HF) tubing is good for jacketing cables where sharp bends or turns are required. Also suitable for situations where the cable is subject to motion. Such situations are common for industrial machinery, transportation equipment, robotics, welding, and many other cabling applications. To complete the cable jacket seal, the ends may be sealed for further water and corrosion protection by using available tape sealant or adhesive.

Installation

Minimum shrink temperature: 80°C [176°F]

Minimum full recovery temperature: 121°C [250°F]

Operating Temperature Range

-55°C to 90°C
[-67°F to 194°F]

Specifications/Approvals

Series	Military	Agency	TE
HF	AMS-DTL-23053/15* Class 2**	ABS, Lloyd's	RW-2023

*Formerly MIL-I-23053/15 and MIL-DTL-23053/15.
**Except for coatings requirement.

Available in:	Americas	Europe	Asia Pacific
	■	■	■

Catalog 1654025
Revised 3-13

www.te.com

Dimensions are shown for reference purposes only. Specifications subject to change.

Dimensions are in millimeters unless otherwise specified.

USA: +1 800 522 6752
Asia Pacific: +86 0 400 820 6015
UK: +44 800 267 666

For additional support numbers please visit www.te.com

HF (Continued)

Product Dimensions

Size	Standard Nominal Length (m/ft)	Inside Diameter		Wall Thickness**
		Minimum Expanded as Supplied	Maximum Recovered After Heating	Nominal Recovered After Heating
HF04	1.2, 7.5 [4, 25]	10.16 [0.400]	3.81 [0.150]	1.52 [0.060]
HF07	1.2, 7.5 [4, 25]	19.05 [0.750]	5.59 [0.220]	1.52 [0.060]
HF11	1.2, 7.5 [4, 25]	27.94 [1.100]	9.52 [0.375]	2.67 [0.105]
HF13	1.2, 7.5 [4, 25]	33.02 [1.300]	9.52 [0.375]	2.67 [0.105]
HF15	1.2, 7.5 [4, 25]	38.10 [1.500]	12.70 [0.500]	3.05 [0.120]
HF17	1.2, 7.5 [4, 25]	43.14 [1.700]	12.70 [0.500]	3.05 [0.120]
HF20	1.2, 7.5 [4, 25]	50.80 [2.000]	19.05 [0.750]	3.56 [0.140]
HF27	1.2, 7.5 [4, 25]	68.58 [2.700]	22.86 [0.900]	3.94 [0.155]

**Wall thickness will be less if tubing recovery is restricted during shrinkage.

Ordering Information

Color	Standard	Black
Size selection	Always order the largest size that will shrink snugly over the component to be covered.	
Standard packaging	1.2-meter [4-foot] or 7.5-meter [25-foot] lengths. Nonstandard lengths are available upon request.	
Ordering description	See below.	

Part Numbering System

HF - _ FR X _ / _

- **"NM"** - no mark
- **Length** in feet (4 and 25 feet standard)
- **"FR"** - flame-retardant
- **Size**
- **Product Name**

Example: HF-17FRX25/NM

Catalog 1654025
Revised 3-13

www.te.com

Dimensions are shown for reference purposes only. Specifications subject to change.

Dimensions are in millimeters unless otherwise specified.

USA: +1 800 522 6752
Asia Pacific: +86 0 400 820 6015
UK: +44 800 267 666

For additional support numbers please visit www.te.com

HFT5000

Heat-Shrinkable Fabric Tubing

Product Facts

- **Highly flexible woven fabric tubing**
- **Polyethylene/polyester construction for excellent abrasion resistance**
- **Halogen free**
- **Heat-shrinkable to grip substrates tightly without additonal fixing**
- **2:1 shrink ratio for easy installation onto different substrate diameters and sizes**
- **Highly flexible woven fabric construction for easy, compliant installation onto awkward substrates such as bent hoses**
- **Outstanding abrasion resistance over a wide temperature range**
- **Easily cut with standard industrial cutting equipment**
- **Resistant to harsh environments**
- **Multifilament construction that ensures soft, safe handling**
- **Low shrink temperature for safe installation onto heat sensitive substrates**
- **RoHS compliant**

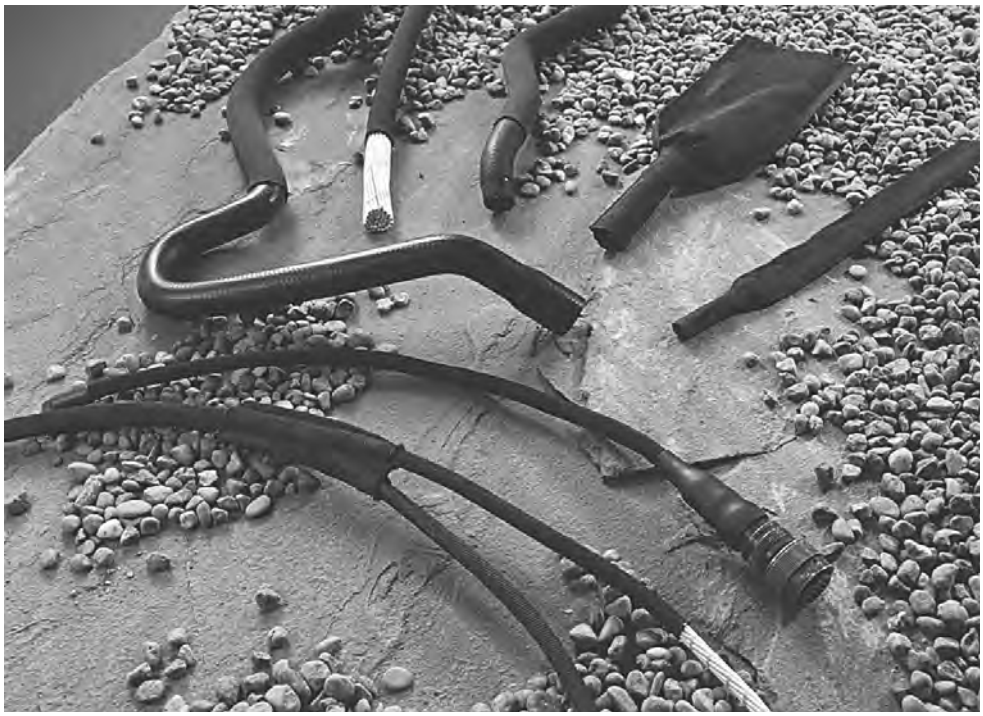

Applications

Designed primarily to provide mechanical abrasion protection for components such as rubber hoses, plastic pipes, and harness wiring bundles. Also suitable for other applications, such as noise and rattle suppression.

The woven construction makes HFT5000 extremely flexible and resistant to trapping water, heat and humidity. Provides outstanding abrasion, chafing and cutting protection, even at high-temperatures.

Installation

Minimum shrink temperature: 80°C [176°F]

Minimum full recovery temperature: 110°C [230°F]

Maximum storage temperature: 60°C [140°F]

Operating Temperature Range

3000 hours:
-40°C to 125°C
[-40°F to 257°F]

1000 hours:
-40°C to 150°C
[-40°F to 302°F]

Specifications/Approvals

Series	UL*	TE
HFT5000	E199379 Rated 135°C	RW-2060

Available in:	Americas	Europe	Asia Pacific
	■	■	■

Catalog 1654025
Revised 3-13

www.te.com

Dimensions are shown for reference purposes only. Specifications subject to change.

Dimensions are in millimeters unless otherwise specified.

USA: +1 800 522 6752
Asia Pacific: +86 0 400 820 6015
UK: +44 800 267 666

For additional support numbers please visit www.te.com

HFT5000 (Continued)

Product Dimensions

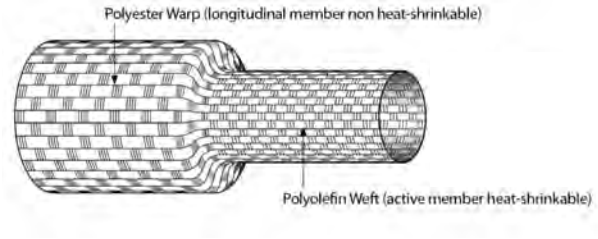

Size	Inside Diameter	
	Minimum Expanded as Supplied	Maximum Recovered After Heating
Standard		
12/6	12 [0.47]	6 [0.24]
20/10	20 [0.79]	10 [0.39]
30/15	30 [1.18]	15 [0.59]
40/20	40 [1.57]	20 [0.79]
50/25	50 [1.97]	25 [0.98]
60/30	60 [2.36]	30 [1.18]
70/35	70 [2.76]	35 [1.38]
Non-Standard High Volume		
25/12	25 [0.98]	12 [0.47]
34/17	34 [1.34]	17 [0.67]
80/40	80 [3.15]	40 [1.57]

Ordering Information

Color	Standard	Black (-0)
Standard packaging	On spools.	
Ordering description	Specify product name, size and color (for example, HFT5000-12/6-0)	

Catalog 1654025
Revised 3-13

www.te.com

Dimensions are shown for reference purposes only. Specifications subject to change.

Dimensions are in millimeters unless otherwise specified.

USA: +1 800 522 6752
Asia Pacific: +86 0 400 820 6015
UK: +44 800 267 666

For additional support numbers please visit www.te.com

HRHF/HRNF/HRSR

High-Ratio, Heat-Shrinkable Tubing

Product Facts

- Offers toughness and durability
- Provides excellent insulation and abrasion protection
- Is available in flame-retardant material
- Shrinks to fit (5.6:1)
- FR callouts meet all of the requirements of AMS-DTL-23053/15*, except for some of the tubing sizes, which do not meet the exact recovered wall thickness requirements
- HRHF and HRSR have the following agency approvals:
  - ABS (American Bureau of Shipping)
  - Lloyd's (Lloyd's Register of Shipping
- RoHS compliant

Applications

High-ratio (HR) heat-shrinkable tubing, with expansion ratios as high as 5.6 to 1, is designed to accommodate large size differences between cables and cable connectors and backshells, thus simplifying repair of damaged cable. High-ratio tubing is available in semirigid flame-retardant (SR), standard (NF), or high-flex flame-retardant (HF) material and with or without factory-applied sealants and adhesives. The water-proofing sealant provides environmental sealing and is watertight in wet and corrosive locations. The thermoplastic adhesive coating offers excellent strain relief and environ-mental sealing.

Installation

Minimum shrink temperature: 80°C [176°F]

Minimum full recovery temperature: 121°C [250°F]

Operating Temperature Range

-55°C to 110°C
[-67°F to 230°F]

Specifications/Approvals

Series	Agency	TE
HRSR	ABS, Lloyd's	RW-2013
HRHF	ABS, Lloyd's	RW-2013
HRNF	—	RW-2013

Available in:	Americas	Europe	Asia Pacific
	■	■	■

Catalog 1654025
Revised 3-13

www.te.com

Dimensions are shown for reference purposes only. Specifications subject to change.

Dimensions are in millimeters unless otherwise specified.

USA: +1 800 522 6752
Asia Pacific: +86 0 400 820 6015
UK: +44 800 267 666

For additional support numbers please visit www.te.com

HRHF/HRNF/HRSR (Continued)

Product Dimensions

Size†	Inside Diameter		Recovered Wall Thickness††
	Minimum Expanded as Supplied	Maximum Recovered After Heating	Nominal After Heating
HR**060	15.24 [0.600]	3.81 [0.150]	1.52 [0.060]
HR**125	31.75 [1.250]	6.10 [0.240]	1.52 [0.060]
HR**175	44.45 [1.750]	8.00 [0.315]	2.41 [0.095]
HR**200	50.80 [2.000]	9.52 [0.375]	2.67 [0.105]
HR**250	63.50 [2.500]	12.70 [0.500]	3.05 [0.120]
HR**300	76.20 [3.000]	19.05 [0.750]	3.05 [0.120]
HR**400	101.60 [4.000]	22.86 [0.900]	3.56 [0.140]

†For ** substitute HF, NF or SR for material required.
††Wall thickness will be less if tubing recovery is restricted during shrinkage.

Ordering Information

Color	Standard	Black (-0)
	Nonstandard	Clear available on request (not flame-retardant; HRHF only)
Size selection	Always order the largest size that will shrink snugly over the component to be covered. Other sizes are available upon request.	
Standard packaging	Up to 18 inch lengths maximum.*	
Ordering description	See below.	

*Cutting tolerance is ± 0.125".

Part Numbering System

HRHF - _ _ - _ / _ _

- **"NM"** - no mark
- **Coating**
  Adhesive (/97)
  Sealant (/226)
  Blank for no coating
- **Length** in inches (up to 18 inch length maximum)
- **"FR"** - flame-retardant for SR and HF
  "CL" - Clear, non-flame-retardant; HF only
- **Size**
- **Product Name**
  HRHF - high flex
  HRNF - non-flame-retardant
  HRSR - semirigid

Example: HRHF-125FR-10/226-NM

Catalog 1654025
Revised 3-13

www.te.com

Dimensions are shown for reference purposes only. Specifications subject to change.

Dimensions are in millimeters unless otherwise specified.

USA: +1 800 522 6752
Asia Pacific: +86 0 400 820 6015
UK: +44 800 267 666

For additional support numbers please visit www.te.com

HRHT

High-Ratio, High-Temperature, Flexible, Thick Wall Polyolefin Heat-Shrinkable Tubing

Product Facts

- Shrink ratios as high as 6:1
- Specially formulated for thick wall insulation, strain relief and abrasion protection
- Flame retardant passing ASTM D 635
- Excellent performance in both hot and cold environments
- Optional factory applied adhesive provides watertight environmental sealing in wet and corrosive locations
- RoHS compliant

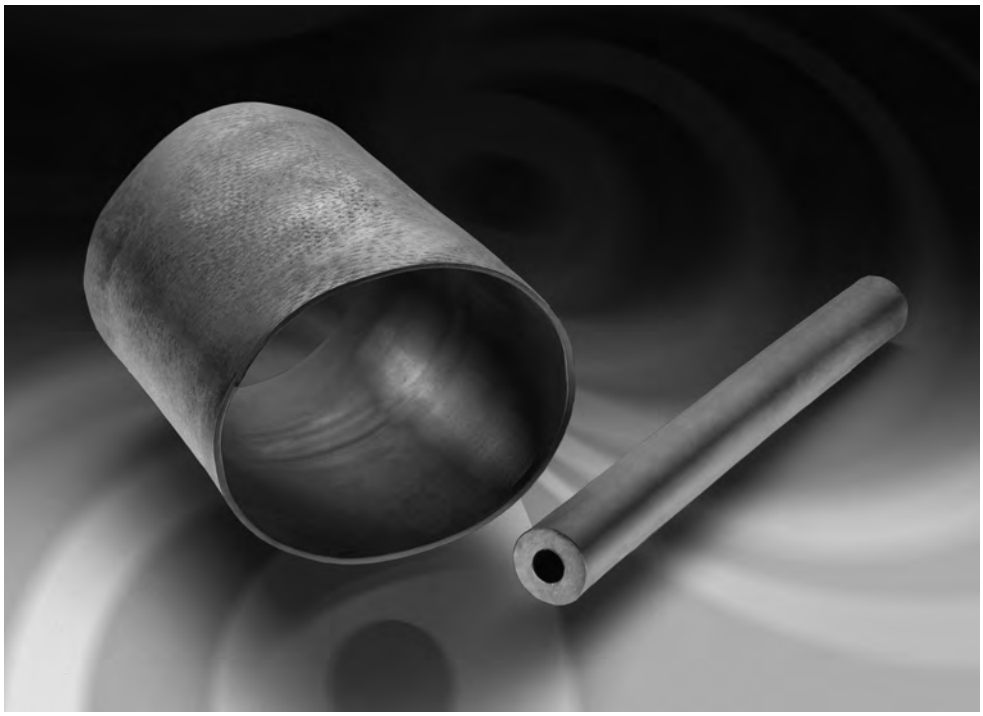

Applications

High-ratio (HR), high–temperature (HT) heat-shrinkable tubing, with shrink ratios as high as 6-to-1, is designed to conform to odd shapes and shrink over large transitions, allowing for the repair and sealing of cable connectors and equipment. This product can be used to seal the back end of a connector or simply repair the damaged outer insulation of a cable or wire. Cable harnesses can be repaired and released without disassembly.

HRHT tubing is available with an optional hot melt adhesive lining. A high-performance adhesive is also available for more demanding applications.

Installation

Minimum shrink temperature: 135°C [275°F]

Minimum full recovery temperature: 150°C [302°F]

Operating Temperature Range

-55°C to 135°C
[-67°F to 275°F]

Specifications/Approvals

Series	Military	TE
HRHT	SAE-AS81765/1, Type II*	HRHT SCD

*heat-shrinkable, crosslinked, flexible polyolefin

Available in:	Americas	Europe	Asia Pacific
	■	■	■

Catalog 1654025
Revised 3-13

www.te.com

Dimensions are shown for reference purposes only. Specifications subject to change.

Dimensions are in millimeters unless otherwise specified.

USA: +1 800 522 6752
Asia Pacific: +86 0 400 820 6015
UK: +44 800 267 666

For additional support numbers please visit www.te.com

HRHT (Continued)

Product Dimensions

Size†	Inside Diameter		Wall Thickness††
	Minimum Expanded as Supplied	Maximum Recovered After Heating	Nominal Recovered After Heating
HRHT-1/X	19.05 [0.750]	3.05 [0.120]	3.94 [0.155]
HRHT-2/X	38.16 [1.500]	5.84 [0.230]	3.94 [0.155]
HRHT-3/X	50.80 [2.000]	9.14 [0.360]	3.94 [0.155]
HRHT-4/X	76.20 [3.000]	12.70 [0.500]	3.94 [0.155]
HRHT-5/X	114.30 [4.500]	19.05 [0.750]	3.94 [0.155]

†"X" indicates recovered length in inches (e.g. for 3.0-inch length: HRHT-2/3). The tolerance shall be +/- 10% of the specified recovered length.
††Wall thickness will be less if tubing recovery is restricted during shrinkage.

Ordering Information

Color	Standard	Black (-0)
Size selection	Always order the largest size that will shrink snugly over the component to be covered.	
Standard packaging	In pieces.	
Ordering description	Specify product name, size and cut length (for example, HRHT-1/3).	

Part Numbering System

HRHT - _ / _ _

- Add **"NA"** to the end of the part number if no adhesive is required
- Unrestricted recovered length
- Expanded inside diameter - as supplied

Catalog 1654025
Revised 3-13

www.te.com

Dimensions are shown for reference purposes only. Specifications subject to change.

Dimensions are in millimeters unless otherwise specified.

USA: +1 800 522 6752
Asia Pacific: +86 0 400 820 6015
UK: +44 800 267 666

For additional support numbers please visit www.te.com

HTAT

Semiflexible, Dual Wall, Moisture-Resistant, Heat-Shrinkable Tubing

Product Facts

- 4:1 shrink ratio
- Environmental sealing
- High-strength bonding
- Well-suited connector sealing covering large diameter differences
- RoHS compliant

Applications

Designed to provide environmental sealing for a range of substrates, at elevated temperatures. Manufactured by TE from radiationcrosslinked polyolefins, the inner wall melts when heated and is forced into interstices by the shrinking of the outer wall so that, when cooled, the substrate is encapsulated by a tough, protective moisture barrier.

An operating range of -55˚C to 125˚C [-67˚F to 257˚F] and a high-shrink-ratio as standard, mean that the tubing offers superior environmental protection to a wide range of irregular shapes with varying dimensions. The jacket is flame-retardant to reduce flame propagation.

Installation

Minimum shrink temperature: 80°C [176°F]

Minimum full recovery temperature: 110°C [230°F]

Operating Temperature Range

-55°C to 125°C
[-67°F to 257°F]

Specifications/Approvals

Series	TE
HTAT	RW-2052

Available in:	Americas	Europe	Asia Pacific
	■	■	■

Catalog 1654025
Revised 3-13

www.te.com

Dimensions are shown for reference purposes only. Specifications subject to change.

Dimensions are in millimeters unless otherwise specified.

USA: +1 800 522 6752
Asia Pacific: +86 0 400 820 6015
UK: +44 800 267 666

For additional support numbers please visit www.te.com

HTAT (Continued)

Product Dimensions

Size	Inside Diameter		Recovered Wall Thickness*	
	Minimum Expanded as Supplied	Maximum Recovered After Heating	Nominal Total Wall After Heating	Nominal Adhesive Wall After Heating
4/1	4.0 [0.158]	1.0 [0.039]	1.00 [0.039]	0.40 [0.016]
8/2	8.0 [0.315]	2.0 [0.079]	1.00 [0.039]	0.50 [0.020]
12/3	12.0 [0.472]	3.0 [0.118]	1.40 [0.055]	0.60 [0.024]
16/4	16.0 [0.630]	4.0 [0.158]	1.75 [0.069]	0.75 [0.030]
24/6	24.0 [0.945]	6.0 [0.236]	2.25 [0.088]	0.80 [0.032]
32/8	32.0 [1.260]	8.0 [0.315]	2.50 [0.098]	1.00 [0.039]
48/13	48.0 [1.890]	13.0 [0.512]	2.55 [0.100]	1.00 [0.039]

*Wall thickness will be less if tubing recovery is restricted during shrinkage.

Ordering Information

Color	Standard Black (-0)
Size selection	Always order the largest size that will shrink snugly over the component to be covered. Special order sizes are available upon request.
Standard packaging	In 1.2-meter [4-foot] lengths.
Ordering description	Specify product name, size and color (for example, HTAT 8/2-0).

Dimensions are shown for reference purposes only. Specifications subject to change.

Dimensions are in millimeters unless otherwise specified.

USA: +1 800 522 6752
Asia Pacific: +86 0 400 820 6015
UK: +44 800 267 666

For additional support numbers please visit www.te.com

Maulflex Conduit System

Lightweight, Flexible, Abrasion-Resistant, Shielded Electrical Conduit

Mauflex conduit systems protect integrated harnessing systems while allowing re-entry and repair.

Crosslinked outer convoluted material is highly durable and abrasion-resistant

Maulflex conduit system is a three-component integrated harnessing system. Helical conduit construction of the outer layer provides crush-resistant characteristics as well as flexibility and resistance to many chemicals, fluids and solvents. The shielding layer provides EMI protection. The internal expando layer protects wires from chafing.

Product Facts

- **Circuit design flexibility**
- **Wire-protective Expando® lining**
- **Reusability**
- **Increased service life cycle**
- **Lightweight**
- **Crush resistant**
- **Stands up to heavy abuse/abrasion**
- **Strain relief/strength member**
- **Total environmentally sealed system**
- **Line of backshells are available for reliable termination**

Applications

To be used in ground support test equipment cables which are constantly coiled and uncoiled in and out of metal boxes/cabinets

Electrical

RFI and EMI shielding: Either one or two layers of tinned-copper braid are available to meet shielding requirements.

Sizes of Maulflex conduit range from .240 inches with two layers of shielding to 1.430 inches with one layer of shielding.

Materials

Harness fabrication involves using TE specified Mod M Tinel-Lock adapters, and Uniboots with light-weight Mauflex conduit.

Part Numbers

Dimensions are inches over millimeters

Size Number	1 Layer Shield (A) Minimum	1 Layer Shield Weight per 100 Feet	2 Layer Shield (A) Minimum	2 Layer Shield Weight per 100 Feet	(B) Maximum	Bend Radius 7*	Helical Convolex® Size
1	.240 (6,10)	4.1 (1,86)	.200 (5,08)	6.0 (2,72)	.510 (12,96)	.88 (22,35)	3/8
2	.312 (7,92)	5.0 (2,27)	.270 (6,86)	7.2 (3,27)	.571 (14,50)	.88 (22,35)	7/16
3	.360 (9,14)	5.8 (2,63)	.320 (8,13)	8.6 (3,90)	.650 (16,51)	1.25 (31,75)	1/2
4	.480 (12,19)	9.6 (4,35)	.440 (11,18)	13.4 (6,08)	.770 (19,56)	1.50 (38,10)	5/8
5	.600 (15,24)	11.3 (5,13)	.560 (14,22)	18.0 (8,16)	.930 (23,62)	1.75 (44,45)	3/4
6	.720 (18,29)	16.6 (7,53)	.680 (17,27)	24.1 (10,93)	1.073 (27,25)	2.00 (50,80)	7/8
7	.840 (21,34)	19.1 (8,66)	.800 (20,32)	27.7 (12,56)	1.226 (31,14)	2.37 (60,20)	1
8	1.050 (26,67)	28.8 (13,06)	1.000 (25,40)	43.6 (19,78)	1.539 (35,30)	2.75 (69,85	1-1/4
9	1.430 (36,32)	38.4 (17,42)	1.375 (34,93)	56.2 (25,49)	1.975 (50,17)	3.63 (92,20)	1-5/8

Available in:	Americas	Europe	Asia Pacific
	■	■	■

Catalog 1654025
Revised 3-13

www.te.com

Dimensions are shown for reference purposes only. Specifications subject to change.

Dimensions are in millimeters unless otherwise specified.

USA: +1 800 522 6752
Asia Pacific: +86 0 400 820 6015
UK: +44 800 267 666

For additional support numbers please visit www.te.com

Maulflex Conduit System (Continued)

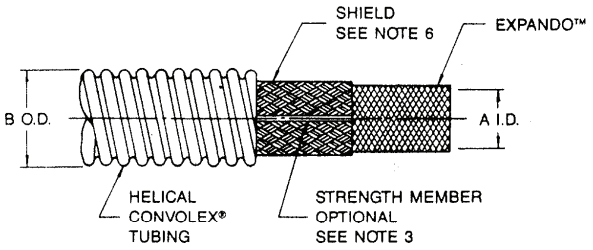

CONSTRUCTION VIEW

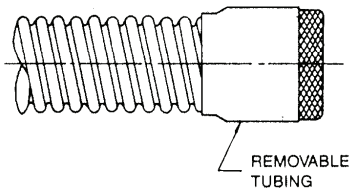

AS SUPPLIED
(ENDS ONLY)

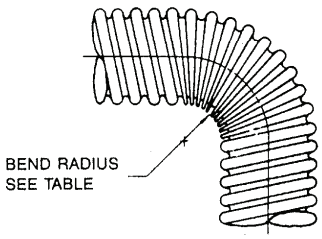

Ordering Information

MAULFLEX - 6 X X – SM – XX

- Product Family Name
- Helical Convolex® type -6 XLETFE per RT-1162 (see note 8)
- Shield (see note 6)
  1. Single layer tinned copper
  2. Two layers tinned copper
- Size number (see table for dimensions)
- Add if srength member is required (see note 3)
- Length in inches

Expando is a registered trademark of Federal Mogul.

Notes:

1. Dimensions in table are in Inches (millimeters) ; lbs. (kgms)
2. Service rating: -55°C (-67°F) to + 150°C (+302°F).
3. Two Kevlar® strength members placed longitudinally 180° apart between shield and convolex tubing. These Kelvar strength members are to be a minimum of about 12 inches longer than the convolex tubing with a minimum of 6 inches out each end and stored under the removable tubing.
4. Consult factory for optional configurations.
5. Standard lengths supplied: 4 feet minimum; 24 feet maximum (lengths to be specified when ordering).
6. Shield material, tin coated copper per A-A-59569 and QQ-B-575.

7.* The recommended minimum bend radius that can be achieved without cross sectional area reduction.

8. When used as Maulflex paragraphs 4.3.1, 4.3.2, 4.3.3, 4.3.4, 4.3.5, and Table 2 inside diameter of RT-1162 are not applicable.

Kevlar is a registered trademark of E.I. duPont de Nemours & Co.

Dimensions are shown for reference purposes only. Specifications subject to change.

Dimensions are in millimeters unless otherwise specified.

USA: +1 800 522 6752
Asia Pacific: +86 0 400 820 6015
UK: +44 800 267 666

For additional support numbers please visit www.te.com

NT

Flexible, General Purpose Modified Elastomeric Tubing

Product Facts

- **Remains flexible at temperatures as low as -55˚C [-67˚F]**
- **Offers good resistance to abrasion and physical abuse while providing the flexibility and strain relief needed in general-purpose harnessing applications**
- **Resistant to most common fluids and solvents**
- **RoHS compliant**

Applications

Widely used for insulation, strain relief, and abrasion protection on cable harnesses and wire bundles in the commercial electronics industries where a reliable general-purpose tubing is needed. Suitable for applications requiring some exposure to common fluids and solvents.

Installation

Minimum shrink temperature: 90°C [194°F]

Minimum full recovery temperature: 135°C [275°F]

Operating Temperature Range

-55°C to 90°C
[-67°F to 194°F]

Specifications/Approvals

Series	TE
NT	RT-510

Available in:	Americas	Europe	Asia Pacific
	■	■	■

Catalog 1654025
Revised 3-13

www.te.com

Dimensions are shown for reference purposes only. Specifications subject to change.

Dimensions are in millimeters unless otherwise specified.

USA: +1 800 522 6752
Asia Pacific: +86 0 400 820 6015
UK: +44 800 267 666

For additional support numbers please visit www.te.com

NT (Continued)

Product Dimensions

Size	Inside Diameter		Recovered Wall Thickness**
	Minimum Expanded as Supplied	Maximum Recovered After Heating	After Heating
1/8	3.2 [0.125]	1.6 [0.061]	0.69 ± 0.20 [0.027 ± 0.008]
3/16	4.8 [0.187]	2.5 [0.100]	0.84 ± 0.25 [0.033 ± 0.010]
1/4	6.4 [0.250]	3.6 [0.143]	0.89 ± 0.25 [0.035 ± 0.010]
3/8	9.5 [0.375]	5.5 [0.214]	1.01 ± 0.25 [0.040 ± 0.010]
1/2	12.7 [0.500]	7.3 [0.286]	1.21 ± 0.38 [0.048 ± 0.015]
5/8	15.9 [0.625]	9.1 [0.357]	1.32 ± 0.38 [0.052 ± 0.015]
3/4	19.1 [0.750]	10.9 [0.428]	1.44 ± 0.38 [0.057 ± 0.015]
7/8	22.2 [0.875]	12.7 [0.500]	1.65 ± 0.38 [0.065 ± 0.015]
1	25.4 [1.000]	14.5 [0.570]	1.77 ± 0.51 [0.070 ± 0.020]
1 1/4	31.8 [1.250]	18.1 [0.714]	2.20 ± 0.51 [0.087 ± 0.020]
1 1/2	38.1 [1.500]	21.8 [0.857]	2.41 ± 0.51 [0.095 ± 0.020]
1 3/4	44.5 [1.750]	25.4 [1.000]	2.71 ± 0.51 [0.107 ± 0.020]
2	50.8 [2.000]	29.0 [1.140]	2.79 ± 0.51 [0.110 ± 0.020]
3	76.2 [3.000]	43.4 [1.710]	3.17 ± 0.51 [0.125 ± 0.020]
4	101.6 [4.000]	57.9 [2.280]	3.55 ± 0.51 [0.140 ± 0.020]

**Wall thickness will be less if tubing recovery is restricted during shrinkage.

Ordering Information

Color	Standard Black (-0)
Size selection	Always order the largest size that will shrink snugly over the component to be covered. Special order sizes are available upon request.
Standard packaging	On spools.
Ordering description	Specify product name, size and color (for example, NT 1/4-0).

Dimensions are shown for reference purposes only. Specifications subject to change.

Dimensions are in millimeters unless otherwise specified.

USA: +1 800 522 6752
Asia Pacific: +86 0 400 820 6015
UK: +44 800 267 666

For additional support numbers please visit www.te.com

NT-MIL

Flexible, Rugged, Modified Elastomeric Tubing

Product Facts

- **Remains flexible at temperatures as low as -70°C [-94°F] without cracking**
- **Withstands heat shock at 200°C [392°F] without dripping, flowing or cracking**
- **Offers outstanding resistance to abrasion and physical abuse while providing flexibility and strain relief needed in rugged harnessing applications**
- **Resistant to most fluids and solvents, including aviation and ground vehicle fuels, lubricating oil, and hydraulic fluids**
- **Meets the stringent requirements of SAE-AMS-DTL-23053/1, Classes 1 and 2**
- **RoHS compliant**

Applications

Widely used for insulation, strain relief and abrasion protection on cable harnesses and wire bundles in the military and aerospace industries where a reliable rugged tubing is needed. Especially suitable for applications requiring exposure to common fluids and solvents.

Installation

Minimum shrink temperature: 90°C [194°F]

Minimum full recovery temperature: 135°C [275°F]

Operating Temperature Range

-70°C to 121°C
[-94°F to 250°F]

Specifications/Approvals

Series	Military	TE
NT-MIL	AMS-DTL-23053/1*, Classes 1 & 2	RW-3030

*Formerly MIL-I-23053/1 and MIL-DTL-23053/1

Available in:	Americas	Europe	Asia Pacific
	■	■	■

Catalog 1654025
Revised 3-13

www.te.com

Dimensions are shown for reference purposes only. Specifications subject to change.

Dimensions are in millimeters unless otherwise specified.

USA: +1 800 522 6752
Asia Pacific: +86 0 400 820 6015
UK: +44 800 267 666

For additional support numbers please visit www.te.com

NT-MIL (Continued)

Product Dimensions

MIL SPEC No. (CL1/CL2)	Size	Inside Diameter: Minimum Expanded as Supplied	Inside Diameter: Maximum Recovered After Heating	Recovered Wall Thickness*: After Heating
—	1/8	3.2 [0.125]	1.6 [0.061]	0.69 ± 0.20 [0.027 ± 0.008]
—	3/16	4.8 [0.187]	2.5 [0.100]	0.84 ± 0.25 [0.033 ± 0.010]
-101/-201	1/4	6.4 [0.250]	3.6 [0.143]	0.89 ± 0.25 [0.035 ± 0.010]
-102/-202	3/8	9.5 [0.375]	5.4 [0.211]	1.01 ± 0.25 [0.040 ± 0.010]
-103/-203	1/2	12.7 [0.500]	7.3 [0.286]	1.21 ± 0.38 [0.048 ± 0.015]
-104/-204	5/8	15.9 [0.625]	9.1 [0.357]	1.32 ± 0.38 [0.052 ± 0.015]
-105/-205	3/4	19.1 [0.750]	10.9 [0.428]	1.44 ± 0.38 [0.057 ± 0.015]
-106/-206	7/8	22.2 [0.875]	12.7 [0.500]	1.65 ± 0.38 [0.065 ± 0.015]
-107/-207	1	25.4 [1.000]	14.5 [0.570]	1.77 ± 0.51 [0.070 ± 0.020]
-108/-208	1 1/4	31.8 [1.250]	18.1 [0.714]	2.20 ± 0.51 [0.087 ± 0.020]
-109/-209	1 1/2	38.1 [1.500]	21.8 [0.857]	2.41 ± 0.51 [0.095 ± 0.020]
-110/-210	1 3/4	44.5 [1.750]	25.4 [1.000]	2.71 ± 0.51 [0.107 ± 0.020]
-111/-211	2	50.8 [2.000]	29.0 [1.140]	2.79 ± 0.51 [0.110 ± 0.020]
-112/-212	3	76.2 [3.000]	43.4 [1.710]	3.17 ± 0.51 [0.125 ± 0.020]
-113/-213	4	101.6 [4.000]	57.9 [2.280]	3.55 ± 0.51 [0.140 ± 0.020]

*Wall thickness will be less if tubing recovery is restricted during shrinkage.

Ordering Information

Color	Standard	Black (-0)
Size selection	Always order the largest size that will shrink snugly over the component to be covered. Special order sizes are available upon request.	
Standard packaging	On spools.	
Ordering description	Specify product name, size and color (for example, NT-MIL 1/4-0).	

Dimensions are shown for reference purposes only. Specifications subject to change.

Dimensions are in millimeters unless otherwise specified.

USA: +1 800 522 6752
Asia Pacific: +86 0 400 820 6015
UK: +44 800 267 666

For additional support numbers please visit www.te.com

NTFR

Very Flexible, Rugged Neoprene Elastomer Tubing

Product Facts

- **Remains flexible at low temperatures without cracking**
- **Offers outstanding resistance to abrasion and physical abuse while providing the flexibility and strain relief needed for rugged applications**
- **Resistant to most fluids and solvents, including aviation and ground-vehicle fuels, lubricating oil, and hydraulic fluids (see TE Specification RT-511)**
- **Performance exceeds the stringent requirements of SAE-AMS-DTL-23053/1, Class 2**
- **System 20**
- **RoHS compliant**

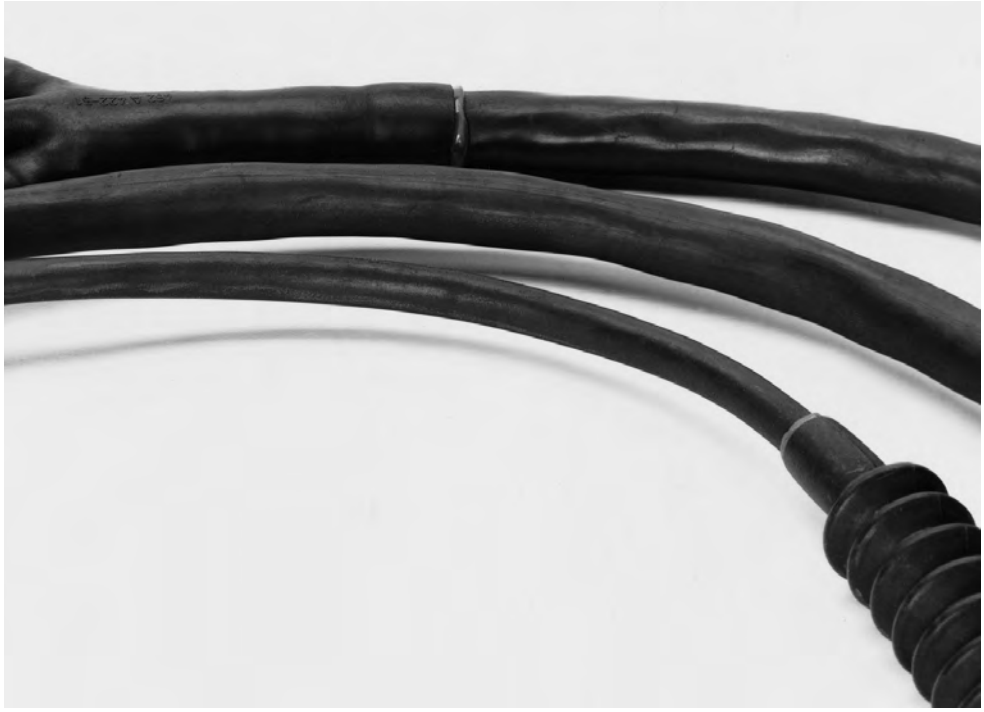

Applications

Widely used for insulation, strain relief, and abrasion protection on cable harnesses and wire bundles in the military and aerospace industries. Especially suitable for applications requiring exposure to fluids and solvents at elevated temperatures.

Installation

Minimum shrink temperature: 90°C [194°F]

Minimum full recovery temperature: 135°C [275°F]

Operating Temperature Range

-70°C to 121°C
[-94°F to 250°F]

Specifications/Approvals

Series	Specification	Agency	TE
NTFR	SC-X-15112	AMS 3623	RT-511

Available in:	Americas	Europe	Asia Pacific
	■	■	■

Catalog 1654025
Revised 3-13

www.te.com

Dimensions are shown for reference purposes only. Specifications subject to change.

Dimensions are in millimeters unless otherwise specified.

USA: +1 800 522 6752
Asia Pacific: +86 0 400 820 6015
UK: +44 800 267 666

For additional support numbers please visit www.te.com

NTFR (Continued)

Product Dimensions

SC-X15112		Inside Diameter		Recovered Wall Thickness**
Spec. No.	Size	Minimum Expanded as Supplied	Maximum Recovered After Heating	After Heating
-001	1/8	3.2 [0.125]	1.6 [0.061]	0.69 ± 0.20 [0.027 ± 0.008]
—	3/16	4.8 [0.187]	2.5 [0.100]	0.84 ± 0.25 [0.033 ± 0.010]
-002	1/4	6.4 [0.250]	3.6 [0.143]	0.89 ± 0.25 [0.035 ± 0.010]
-003	3/8	9.5 [0.375]	5.5 [0.214]	1.01 ± 0.25 [0.040 ± 0.010]
-004	1/2	12.7 [0.500]	7.3 [0.286]	1.21 ± 0.38 [0.048 ± 0.015]
-005	5/8	15.9 [0.625]	9.1 [0.357]	1.32 ± 0.38 [0.052 ± 0.015]
-006	3/4	19.1 [0.750]	10.9 [0.428]	1.44 ± 0.38 [0.057 ± 0.015]
-007	7/8	22.2 [0.875]	12.7 [0.500]	1.65 ± 0.38 [0.065 ± 0.015]
-008	1	25.4 [1.000]	14.5 [0.570]	1.77 ± 0.51 [0.070 ± 0.020]
-009	1 1/4	31.8 [1.250]	18.1 [0.714]	2.20 ± 0.51 [0.087 ± 0.020]
-010	1 1/2	38.1 [1.500]	21.8 [0.857]	2.41 ± 0.51 [0.095 ± 0.020]
-011	1 3/4	44.5 [1.750]	25.4 [1.000]	2.71 ± 0.51 [0.107 ± 0.020]
-012	2	50.8 [2.000]	29.0 [1.140]	2.79 ± 0.51 [0.110 ± 0.020]
-013	3	76.2 [3.000]	43.4 [1.710]	3.17 ± 0.51 [0.125 ± 0.020]
-014	4	101.6 [4.000]	57.9 [2.280]	3.55 ± 0.50 [0.140 ± 0.020]

**Wall thickness will be less if tubing recovery is restricted during shrinkage.

Ordering Information

Color	Standard	Black (-0)
Size selection	Always order the largest size that will shrink snugly over the component to be covered. Special order sizes are available upon request.	
Standard packaging	On spools.	
Ordering description	Specify product name, size and color (for example, NTFR 1/4-0).	

Dimensions are shown for reference purposes only. Specifications subject to change.

Dimensions are in millimeters unless otherwise specified.

USA: +1 800 522 6752
Asia Pacific: +86 0 400 820 6015
UK: +44 800 267 666

For additional support numbers please visit www.te.com

PD Caps

Semirigid, Encapsulant-Lined, Polyolefin Caps

Product Facts

- 3:1 shrink ratio
- Permanent or temporary way to terminate wires
- Rapid, simple installation
- Rugged protection against abrasion, vibration, and flexing
- PD caps provide a splash-resistant, moisture-resistant covering (but not intended for use where immersion in fluids is required)
- RoHS compliant

Applications

PD Caps offer an improved, inexpensive way to encapsulate crimped electrical connections, including those on motor coils. Their encapsulant lining melts and flows to fill surface irregularities of the substrate. These vibration-proof caps are used to insulate and terminate dead-end electrical cables, fixtures, connectors, and other electrical components.

Installation

Minimum shrink temperature: 125°C [257°F]

Minimum full recovery temperature: 135°C [275°F]

Operating Temperature Range

-55°C to 110°C
[-67°F to 230°F]

Specifications/Approvals

Series	UL	TE
PD Caps	E85381 600 V, 125°C	PD Caps SCD

Available in:	Americas	Europe	Asia Pacific
	■	■	■

Catalog 1654025
Revised 3-13

www.te.com

Dimensions are shown for reference purposes only. Specifications subject to change.

Dimensions are in millimeters unless otherwise specified.

USA: +1 800 522 6752
Asia Pacific: +86 0 400 820 6015
UK: +44 800 267 666

For additional support numbers please visit www.te.com

PD Caps (Continued)

Product Dimensions

Size	Length		Inside Diameter		Recovered Wall Thickness** Total Wall After Heating
	Nominal Overall as Supplied	Minimum Open Barrel as Supplied*	Minimum Expanded as Supplied	Maximum Recovered After Heating	
1/8	25.4 [1.00]	12.7 [0.50]	3.18 [0.125]	0.58 [0.023]	1.22 ± 0.15 [0.048 ± 0.006]
3/16	25.4 [1.00]	15.2 [0.60]	4.75 [0.187]	1.52 [0.060]	1.57 ± 0.20 [0.062 ± 0.008]
1/4	28.4 [1.12]	15.2 [0.60]	6.35 [0.250]	2.03 [0.080]	1.98 ± 0.25 [0.078 ± 0.010]
3/8	31.8 [1.25]	18.3 [0.72]	9.53 [0.375]	2.29 [0.090]	2.08 ± 0.25 [0.082 ± 0.010]
1/2	38.1 [1.50]	21.6 [0.85]	12.70 [0.500]	2.29 [0.090]	2.54 ± 0.25 [0.100 ± 0.010]

*See glossary for definition of “barrel.”
**Wall thickness will be less if recovery is restricted during shrinkage.

Ordering Information

Color	Standard Black (-0)
Size selection	Always order the largest size that will shrink snugly over the component to be covered. Special order sizes are available upon request.
Standard packaging	In pieces.
Ordering description	Specify product name, size and color (for example, PD Caps 1/4-0).

Dimensions are shown for reference purposes only. Specifications subject to change.

Dimensions are in millimeters unless otherwise specified.

USA: +1 800 522 6752
Asia Pacific: +86 0 400 820 6015
UK: +44 800 267 666

For additional support numbers please visit www.te.com

PTCM

Very High-Shrink-Ratio, Dual Wall, Flexible Heat-Shrinkable Tubing

Product Facts

- 6:1 shrink ratio
- Exceptional abrasion and cut through resistance
- Low shrink temperature for rapid installation
- Excellent mechanical strength
- RoHS compliant

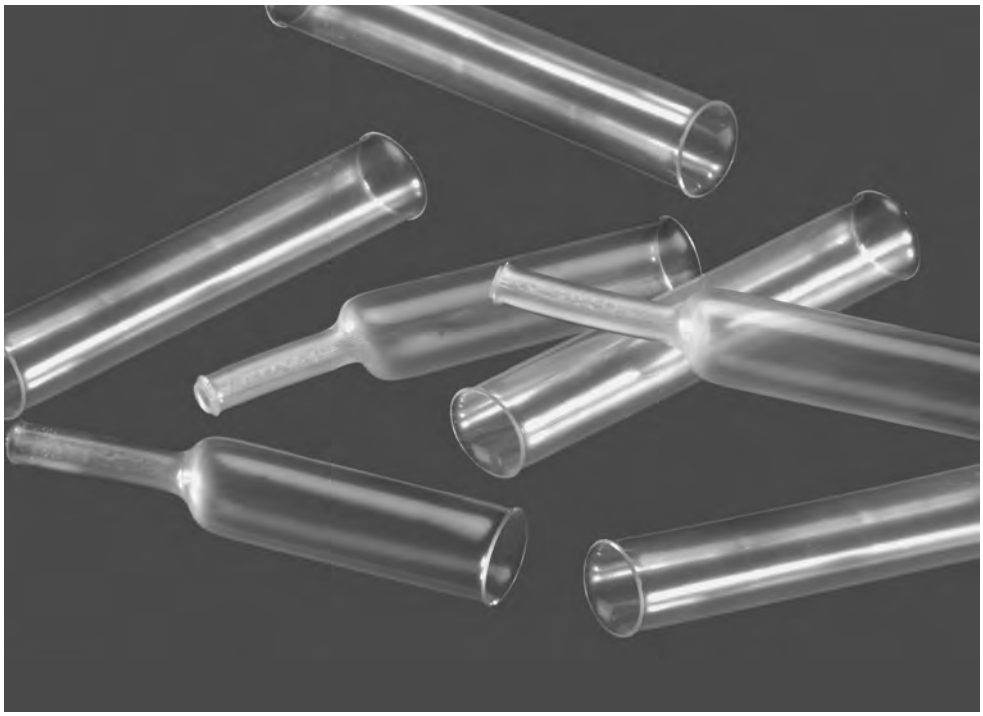

Applications

PTCM is a flexible, heat-shrinkable, dual wall tubing with an integrally bonded meltable adhesive liner. PTCM offers outstanding mechanical and environmental protection to wire splices and terminals and is used for moisture proof encapsulation of a wide variety of components. In particular, it adheres well to PVC. With an impressive 6:1 expansion ratio, one product can protect and insulate a wide range of applications. PTCM also offers exceptional clarity for protection of substrates that may need to be inspected during service.

Installation

Minimum shrink temperature: 60°C [140°F]

Minimum full recovery temperature: 80°C [176°F]

Operating Temperature Range

-40°C to 85°C
[-40°F to 185°F]

Specifications/Approvals

Series	TE
PTCM	RK-6768

Available in:	Americas	Europe	Asia Pacific
		■	

Catalog 1654025
Revised 3-13

www.te.com

Dimensions are shown for reference purposes only. Specifications subject to change.

Dimensions are in millimeters unless otherwise specified.

USA: +1 800 522 6752
Asia Pacific: +86 0 400 820 6015
UK: +44 800 267 666

For additional support numbers please visit www.te.com

PTCM (Continued)

Product Dimensions

Size	Inside Diameter		Recovered Wall Thickness*
	Minimum Expanded as Supplied	Maximum Recovered After Heating	After Heating
9/1.5	9.0 [0.354]	1.5 [0.059]	1.60 ± 0.20 [0.062 ± 0.008]

*Wall thickness will be less if tubing recovery is restricted during shrinkage.

Ordering Information

Color	Standard Clear (-X)
Size selection	Always order the largest size that will shrink snugly over the component to be covered.
Standard packaging	On spools.
Ordering description	PTCM-9/1.5-X-SP

Catalog 1654025
Revised 3-13

www.te.com

Dimensions are shown for reference purposes only. Specifications subject to change.

Dimensions are in millimeters unless otherwise specified.

USA: +1 800 522 6752
Asia Pacific: +86 0 400 820 6015
UK: +44 800 267 666

For additional support numbers please visit www.te.com

RayBlock 85

Heat-Shrinkable Water-Blocking System

Product Facts

- **Environmentally seals wire bundles of up to 20 wires**
- **Withstands temperature excursions to 105°C [221°F]**
- **Provides excellent strain relief and reduces noise**
- **Offers a low-profile installed product only marginally larger than the cable bundle itself**
- **RoHS compliant**

Applications

Designed to provide consistent sealing for cable bundles and the back of connectors. The wires are placed within the channels of a specially formulated hot-melt adhesive profile, then covered by dual-wall, heat-shrinkable tubing with a flame-retardant, radiation-crosslinked outer wall and hot-melt-adhesive inner wall. When the tubing is heated, the hot-melt adhesive melts and the tubing shrinks, forcing the molten adhesive to fill all the voids within the wire bundle and tubing. The result is a solid plug of adhesive molded around each wire in the bundle, creating a moisture-resistant seal.

Installation

Minimum shrink temperature: 80°C [176°F]

Minimum full recovery temperature: 110°C [230°F]

Operating Temperature Range

-40°C to 85°C
[-40°F to 185°F]

Specifications/Approvals

Series	TE
RayBlock 85	RayBlock 85 SCD RW-2101

Available in:	Americas	Europe	Asia Pacific
	■	■	■

Catalog 1654025
Revised 3-13

www.te.com

Dimensions are shown for reference purposes only. Specifications subject to change.

Dimensions are in millimeters unless otherwise specified.

USA: +1 800 522 6752
Asia Pacific: +86 0 400 820 6015
UK: +44 800 267 666

For additional support numbers please visit www.te.com

RayBlock 85 (Continued)

Product Dimensions

Part No.	No. of Channels	Profile			Tubing Inside Diameter		
		Outside Height	Length	Width	Minimum Expanded as Supplied	Maximum Recovered After Heating	Nominal Length
RayBlock 85 Kit 0102-A0	2	8.5 [0.335]	2.75 [0.108]	8.50 [0.335]	12.0 [0.472]	3.0 [0.118]	40 [1.57]
RayBlock 85 Kit 0203-A0	3	8.5 [0.335]	2.75 [0.108]	12.25 [0.482]	24.0 [0.945]	6.0 [0.236]	47 [1.85]
RayBlock 85 Kit 0504-A0	4	8.5 [0.335]	2.75 [0.108]	16.00 [0.630]	16.0 [0.630]	4.0 [0.158]	40 [1.57]
RayBlock 85 Kit 0405-A0	5	8.5 [0.335]	2.75 [0.108]	19.75 [0.778]	24.0 [0.945]	6.0 [0.236]	45 [1.77]
RayBlock 85 Kit 0107-A0	7	8.5 [0.335]	2.75 [0.108]	27.25 [1.070]	24.0 [0.945]	6.0 [0.236]	65 [2.56]
RayBlock 85 Kit 0510-A0	10	8.5 [0.335]	2.75 [0.108]	38.50 [1.520]	32.0 [1.260]	8.0 [0.315]	55 [2.17]

Ordering Information

Color	Standard Black (-0)
Size selection	For wire with an outside diameter smaller than 2.8 [0.110] , use a maximum of two wires per channel. For wire with an outside diameter of 2.8–3.5 [0.110 to 0.138], use a maximum of one wire per channel. Special order sizes are available upon request.
Standard packaging	One kit (contains 1000 pcs. of profile and 1000 pcs. of tubing).

Dimensions are shown for reference purposes only. Specifications subject to change.

Dimensions are in millimeters unless otherwise specified.

USA: +1 800 522 6752
Asia Pacific: +86 0 400 820 6015
UK: +44 800 267 666

For additional support numbers please visit www.te.com

RayBlock 105

Heat-Shrinkable Water-Blocking System

Product Facts

- **Environmentally seals wire bundles of up to 20 wires**
- **Withstands temperature excursions to 120°C [248°F]**
- **Provides excellent strain relief and reduces noise**
- **Offers a low-profile installed product only marginally larger than the cable bundle itself**
- **RoHS compliant**

Applications

Designed to provide consistent sealing for cable bundles and the back of connectors. The wires in the bundle are placed within the channels of a specially formulated hot-melt adhesive profile, and then covered by dual wall, heat-shrinkable tubing with a flame-retardant radiation-crosslinked outer wall and hot-melt-adhesive inner wall. When the tubing is heated, the hot-melt adhesive melts and the tubing shrinks, forcing the molten adhesive to fill all the voids within the wire bundle and tubing. The result is a solid plug of adhesive molded around each wire in the bundle, creating a moisture-resistant seal.

Installation

Minimum shrink temperature: 80°C [176°F]

Minimum full recovery temperature: 110°C [230°F]

Operating Temperature Range

-40°C to 105°C
[-40°F to 221°F]

Specifications/Approvals

Series	TE
RayBlock 105	RayBlock 105 SCD RW-2102

Available in:	Americas	Europe	Asia Pacific
	■	■	■

Catalog 1654025
Revised 3-13

www.te.com

Dimensions are shown for reference purposes only. Specifications subject to change.

Dimensions are in millimeters unless otherwise specified.

USA: +1 800 522 6752
Asia Pacific: +86 0 400 820 6015
UK: +44 800 267 666

For additional support numbers please visit www.te.com

RayBlock 105 (Continued)

Product Dimensions

Part No.	No. of Channels	Profile			Tubing Inside Diameter		
		Outside Height	Length	Width	Minimum Expanded as Supplied	Maximum Recovered After Heating	Nominal Length
RayBlock 105 Kit 0102-A0	2	8.5 [0.335]	2.75 [0.108]	8.50 [0.335]	12.0 [0.472]	3.0 [0.118]	40 [1.57]
RayBlock 105 Kit 0103-A0	3	8.5 [0.335]	2.75 [0.108]	12.25 [0.482]	16.0 [0.630]	4.0 [0.158]	40 [1.57]
RayBlock 105 Kit 0504-A0	4	8.5 [0.335]	2.75 [0.108]	16.00 [0.630]	16.0 [0.630]	4.0 [0.158]	45 [1.77]
RayBlock 105 Kit 0105-A0	5	8.5 [0.335]	2.75 [0.108]	19.75 [0.778]	24.0 [0.945]	6.0 [0.236]	45 [1.77]
RayBlock 105 Kit 0107-A0	7	8.5 [0.335]	2.75 [0.108]	27.20 [1.070]	24.0 [0.945]	6.0 [0.236]	65 [2.56]
RayBlock 105 Kit 0110-A0	10	8.5 [0.335]	2.75 [0.108]	38.50 [1.520]	32.0 [1.260]	8.0 [0.315]	65 [2.56]

Ordering Information

Color	Standard Black (-0)
Size selection	For wire with an outside diameter smaller than 2.8 [0.110], use a maximum of two wires per channel. For wire with an outside diameter of 2.8–3.5 [0.110–0.138], use a maximum of one wire per channel. Special order sizes are available upon request.
Standard packaging	One kit (contains 1000 pcs. of profile and 1000 pcs. of tubing).

Dimensions are shown for reference purposes only. Specifications subject to change.

Dimensions are in millimeters unless otherwise specified.

USA: +1 800 522 6752
Asia Pacific: +86 0 400 820 6015
UK: +44 800 267 666

For additional support numbers please visit www.te.com

Rayrim Edging Material

Commercial Protective, Self-Adhering, Edging Material

Product Facts

- Flexible to allow for protection of curved edges
- RoHS compliant

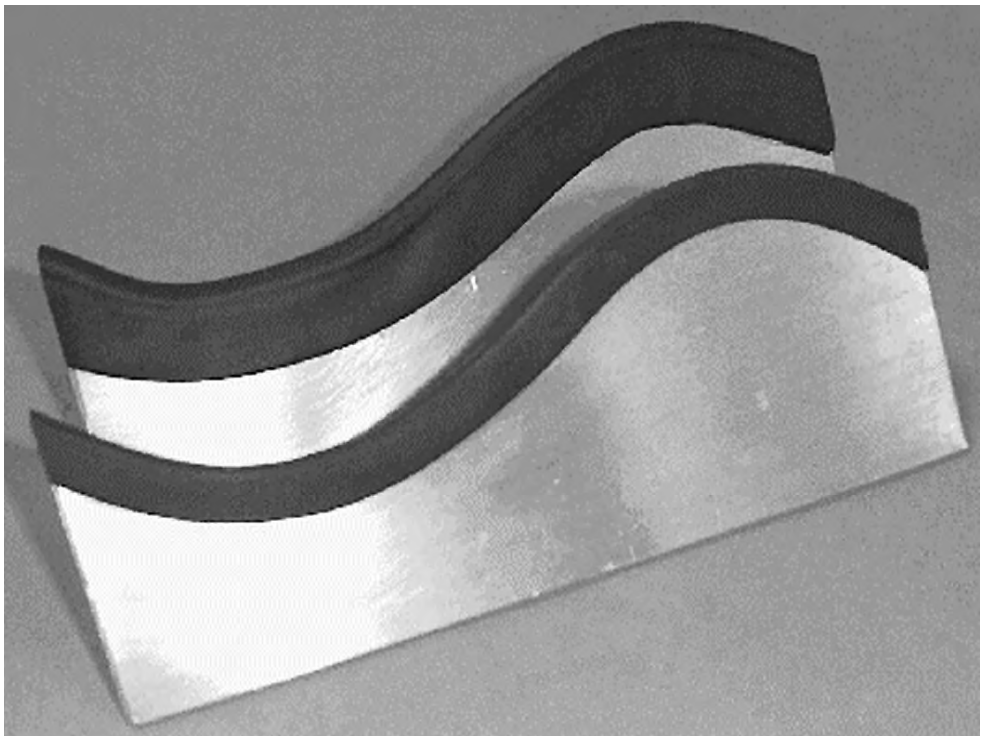

Applications

Rayrim edging material is an extruded strip internally coated with a heat activated adhesive, so that on heating the profile changes from a "V" to a "U" section and the adhesive bonds to the substrate profile.

Manufactured from a radiation cross-linked polyolefin material, the profile offers a clean and rapid means of covering metal, wood and glass edges for all-round protection.

The flexible nature of the product allows application to both internal and external radii, as well as straight edges, and the continuous operating temperature of -55°C to +80°C [-67°F to 176°F] means that the product can give protection under the most testing circumstances.

Installation

Minimum shrink temperature: 120°C [248°F]

Minimum full recovery temperature: 150°C [302°F]

Operating Temperature Range

-55°C to 80°C
[-67°F to 176°F]

Specifications/Approvals

Series	TE
Rayrim	RK-6182

Available in:	Americas	Europe	Asia Pacific
	■	■	■

Catalog 1654025
Revised 3-13

www.te.com

Dimensions are shown for reference purposes only. Specifications subject to change.

Dimensions are in millimeters unless otherwise specified.

USA: +1 800 522 6752
Asia Pacific: +86 0 400 820 6015
UK: +44 800 267 666

For additional support numbers please visit www.te.com

Rayrim Edging Material (Continued)

Product Dimensions

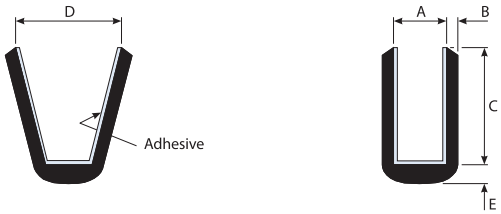

Size	A (maximum)	B (minimum)	C (minimum)	D (minimum)	E (typical)
Nr. 6	0.6 [0.024]	0.5 [0.020]	3.5 [0.138]	0.8 [0.032]	1.25 [0.049]
Nr. 7	1.0 [0.039]	0.9 [0.035]	4.8 [0.189]	1.6 [0.063]	1.25 [0.049]
Nr. 8	2.0 [0.079]	0.9 [0.035]	6.6 [0.260]	2.5 [0.098]	2.25 [0.089]
Nr. 9	4.2 [0.165]	0.9 [0.035]	13.5 [0.532]	4.5 [0.177]	2.20 [0.087]

Application Range

Plate SWG	Thickness	Recommended minimum bend radius
30-24	0.31-0.56 [0.012-0.022]	10 [0.394]
23-16	0.61-1.63 [0.026-0.064]	15 [0.591]
15-10	1.83-3.25 [0.072-0.128]	20 [0.787]
9-5	3.66-5.38 [0.144-0.212]	25 [0.984]

Ordering Information

Color	Standard	Black (-0)
Size selection	Always order the largest size that will shrink snugly on edge of the panel.	
Standard packaging	1.2-meter [4-foot] lengths.	
Ordering description	Specify product name, size number and color (for example, Rayrim Nr.6-0).	

Dimensions are shown for reference purposes only. Specifications subject to change.

Dimensions are in millimeters unless otherwise specified.

USA: +1 800 522 6752
Asia Pacific: +86 0 400 820 6015
UK: +44 800 267 666

For additional support numbers please visit www.te.com

RaySpool

Convenient packaging and dispensing system for heat-shrinkable tubing

Product Facts

- Easy to store
- Easy to dispense
- Well-suited for repairs
- Single wall and adhesive-lined tubings
- Wide variety of colors, sizes and kits available
- Also available are RaySpool kits comprised of 6 sizes and supplied with a mounting rack
- Stand alone racks and packaging sets also available
- RoHS compliant

Applications

The RaySpool system offers a convenient packaging and dispensing option for a range of heat-shrinkable tubings. The tubing is supplied on small reels which are overboxed and feature a dispensing window allowing the tubing to be easily and readily accessed. The RaySpool system is a suitable method of storing and for use in the workshop, service vehicle or laboratory. A varied selection of tubings is offered which will cover a diverse range of applications including electrical insulation, strain relief, cable bundling and environmental protection. RaySpool packaging is available for CGPT, LSTT and CGAT.

Installation

See individual product pages.

Operating Temperature Range

See individual product pages.

Specifications/Approvals

See individual product pages.

Available in:	Americas	Europe	Asia Pacific
		■	

Catalog 1654025
Revised 3-13

www.te.com

Dimensions are shown for reference purposes only. Specifications subject to change.

Dimensions are in millimeters unless otherwise specified.

USA: +1 800 522 6752
Asia Pacific: +86 0 400 820 6015
UK: +44 800 267 666

For additional support numbers please visit www.te.com

RaySpool (Continued)

CGPT 2:1 Product Dimensions

Size	Inside Diameter		Recovered Wall Thickness*	Spool Quantity - Black (meters)	Spool Quantity - Green/Yellow (meters)	Ordering Description
	Minimum Expanded as Supplied	Maximum Recovered After Heating	After Heating			
1.6/0.8	1.6 (0.062)	0.8 (0.031)	0.45 ± 0.12	10.0	-	CGPT-R-1.6-col code
2.4/1.2†	2.4 (0.093)	1.2 (0.046)	0.50 ± 0.12	10.0	-	CGPT-R-2.4-col code
3.2/1.6†•	3.2 (0.125)	1.6 (0.062)	0.50 ± 0.12	10.0	5.0	CGPT-R-3.2-col code
4.8/2.4†	4.8 (0.187)	2.4 (0.093)	0.50 ± 0.12	9.0	-	CGPT-R-4.8-col code
6.4/3.2†•	6.4 (0.250)	3.2 (0.125)	0.65 ± 0.15	8.0	3.5	CGPT-R-6.4-col code
9.5/4.8•	9.5 (0.375)	4.8 (0.187)	0.65 ± 0.15	6.0	3.0	CGPT-R-9.5-col code
12.7/6.4†•	12.7 (0.500)	6.4 (0.250)	0.65 ± 0.15	6.0	2.5	CGPT-R-12.7-col code
19/9.5•	19.0 (0.748)	9.5 (0.375)	0.75 ± 0.15	5.0	2.0	CGPT-R-19.0-col code
25.4/12.7†•	25.4(1.000)	12.7 (0.500)	0.90 ± 0.20	3.0	1.5	CGPT-R-25.4-col code
KIT CONTAINS SIZES INDICATED BY †						CGPT-R-KIT-2

*Wall thickness will be less if tubing recovery is restricted during shrinkage.

Ordering Information

Color	Standard	Black (-0) Green/yellow (-45) available in sizes indicated by •
Size selection	Always order the largest size that will shrink snugly over the component to be covered.	
Standard packaging	On mini spools.	
Ordering description	See above for description	

CGPT 3:1 Product Dimensions

Size	Inside Diameter		Recovered Wall Thickness*	Spool Quantity (meters)	Ordering Description
	Minimum Expanded as Supplied	Maximum Recovered After Heating	After Heating		
3/1†	3.0 (0.118)	1.0 (0.040)	0.55 ± 0.12	10.0	CGPT-R-3/1-col code
6/2†	6.0 (0.236)	2.0 (0.079)	0.65 ± 0.12	7.0	CGPT-R-6/2-col code
9/3†	9.0 (0.354)	3.0 (0.118)	0.75 ± 0.15	5.0	CGPT-R-9/3-col code
12/4†	12.0 (0.472)	4.0 (0.157)	0.75 ± 0.15	4.0	CGPT-R-12/4-col code
18/6†	18.0 (0.709)	6.0 (0.236)	0.85 ± 0.15	3.0	CGPT-R-18/6-col code
24/8†	24.0 (0.945)	8.0 (0.315)	1.00 ± 0.20	3.0	CGPT-R-24/8-col code
KIT CONTAINS SIZES INDICATED BY † (black only)					CGPT-R-KIT-1

*Wall thickness will be less if tubing recovery is restricted during shrinkage.

Ordering Information

Color	Standard	Black (-0) Red (-2) Yellow (-4) Blue (-6)
Size selection	Always order the largest size that will shrink snugly over the component to be covered.	
Standard packaging	On mini spools.	
Ordering description	See above for description	

Dimensions are shown for reference purposes only. Specifications subject to change.

Dimensions are in millimeters unless otherwise specified.

USA: +1 800 522 6752
Asia Pacific: +86 0 400 820 6015
UK: +44 800 267 666

For additional support numbers please visit www.te.com

RaySpool (Continued)

LSTT 2:1 Product Dimensions

Size	Inside Diameter		Recovered Wall Thickness*	Spool Quantity - Black (meters)	Ordering Description
	Minimum Expanded as Supplied	Maximum Recovered After Heating	After Heating		
2.4/1.2†	2.4 (0.093	1.2 (0.046)	0.55 ± 0.12	10.0	LSTT-R-2.4-0
3.2/1.6†	3.2 (0.125)	1.6 (0.062)	0.55 ± 0.12	10.0	LSTT-R-3.2-0
4.8/2.4†	4.8 (0.187)	2.4 (0.093)	0.55 ± 0.12	9.0	LSTT-R-4.8-0
6.4/3.2†	6.4 (0.250)	3.2 (0.125)	0.65 ± 0.15	8.0	LSTT-R-6.4-0
9.5/4.8	9.5 (0.375)	4.8 (0.187)	0.65 ± 0.15	6.0	LSTT-R-9.5-0
12.7/6.4†	12.7 (0.500)	6.4 (0.250)	0.65 ± 0.15	6.0	LSTT-R-12.7-0
19/9.5	19.0 (0.748)	9.5 (0.375)	0.80 ± 0.15	5.0	LSTT-R-19.0-0
25.4/12.7†	25.4(1.000)	12.7 (0.500)	0.95 ± 0.18	3.0	LSTT-R-25.4-0
KIT CONTAINS SIZES INDICATED BY † (black only)					LSTT-R-KIT-1

*Wall thickness will be less if tubing recovery is restricted during shrinkage.

Ordering Information

Color	Standard	Black (-0)
Size selection	Always order the largest size that will shrink snugly over the component to be covered.	
Standard packaging	On mini spools.	
Ordering description	See above for description	

CGAT 3:1 Product Dimensions

Size	Inside Diameter		Recovered Wall Thickness*	Spool Quantity (meters)	Ordering Description
	Minimum Expanded as Supplied	Maximum Recovered After Heating	After Heating		
3/1†	3.0 (0.118)	1.0 (0.040)	1.00 ± 0.25	5.0	CGAT-R-3/1-0
6/2†	6.0 (0.236)	2.0 (0.079)	1.00 ± 0.25	3.5	CGAT-R-6/2-0
9/3†	9.0 (0.354)	3.0 (0.118)	1.35 ± 0.25	3.0	CGAT-R-9/3-0
12/4†	12.0 (0.472)	4.0 (0.157)	1.50 ± 0.25	2.5	CGAT-R-12/4-0
18/6†	18.0 (0.709)	6.0 (0.236)	1.70 ± 0.25	2.0	CGAT-R-18/6-0
24/8†	24.0 (0.945)	8.0 (0.315)	1.90 ± 0.25	1.5	CGAT-R-24/8-0
KIT CONTAINS SIZES INDICATED BY † (black only)					CGAT-R-KIT-1

*Wall thickness will be less if tubing recovery is restricted during shrinkage.

Ordering Information

Color	Standard	Black (-0)
Size selection	Always order the largest size that will shrink snugly over the component to be covered.	
Standard packaging	On mini spools.	
Ordering description	See above for description	

Catalog 1654025
Revised 3-13

www.te.com

Dimensions are shown for reference purposes only. Specifications subject to change.

Dimensions are in millimeters unless otherwise specified.

USA: +1 800 522 6752
Asia Pacific: +86 0 400 820 6015
UK: +44 800 267 666

For additional support numbers please visit www.te.com

RHW

Rugged, Heavy Wall, Adhesive-Lined, Polyolefin Heat-Shrinkable Tubing

Product Facts

- **Withstands mechanical abuse for increased product reliability**
- **Highly resistant to impact and abrasion**
- **Provides high level of strain relief when installed on splices and joints**
- **Resistant to chemicals, moisture and oils**
- **Provides a complete moisture-proof seal preventing corrosion of underlying components**
- **RoHS compliant**

Applications

Rugged, heavy wall RHW tubing is specifically designed for insulating, protecting and sealing electrical connections and joints in low-voltage cables. It provides splice insulation thickness equal to or greater than standard wire insulation manufactured to common industry standards.

RHW is a suitable choice for applications where maximum reliability and product performance, and simplified installation are required. Because RHW is heat-shrinkable, a minimum number of sizes are needed to cover a wide range of cables and splice diameters.

Installation

Minimum shrink temperature: 110°C [230°F]

Minimum full recovery temperature: 125°C [257°F]

Operating Temperature Range

-55°C to 110°C
[-67°F to 230°F]

Specifications/Approvals

Series	UL*	TE
RHW	File E91151	RHW SCD

*Sizes 9/3 through 70/21 only.

Available in:	Americas	Europe	Asia Pacific
	■	■	■

Catalog 1654025
Revised 3-13

www.te.com

Dimensions are shown for reference purposes only. Specifications subject to change.

Dimensions are in millimeters unless otherwise specified.

USA: +1 800 522 6752
Asia Pacific: +86 0 400 820 6015
UK: +44 800 267 666

For additional support numbers please visit www.te.com

RHW (Continued)

Product Dimensions

Size	Inside Diameter		Recovered Wall Thickness**	
	Minimum Expanded as Supplied	Recovered After Heating	Nominal Jacket Wall	Nominal Adhesive Wall
9/3	9 [0.354]	3 [0.118]	2.0 [0.079]	0.25 [0.010]
13/4	13 [0.512]	4 [0.158]	2.4 [0.094]	0.30 [0.012]
20/6	20 [0.787]	6 [0.236]	2.5 [0.098]	0.35 [0.014]
33/8	33 [1.299]	8 [0.315]	3.2 [0.126]	0.35 [0.014]
43/12	43 [1.693]	12 [0.472]	4.3 [0.169]	0.40 [0.016]
51/16	51 [2.008]	16 [0.630]	4.5 [0.177]	0.40 [0.016]
70/21	70 [2.756]	21 [0.827]	4.4 [0.173]	0.40 [0.016]
85/25	85 [3.346]	25 [0.984]	4.3 [0.169]	0.40 [0.016]
105/30	105 [4.134]	30 [1.181]	4.3 [0.169]	0.45 [0.018]
130/36	130 [5.118]	36 [1.417]	4.3 [0.169]	0.45 [0.018]
160/50	160 [6.299]	50 [1.968]	4.3 [0.169]	0.45 [0.018]
180/50	180 [7.087]	50 [1.968]	4.3 [0.169]	0.50 [0.020]

**Wall thickness will be less if tubing recovery is restricted during shrinkage.

Ordering Information

Color	Standard Black (-0)
Size selection	Always order the largest size that will shrink snugly over the component to be covered. Special order sizes are available upon request.
Standard packaging***	1200mm lengths
Marking	Tubing will be marked with the product name, size and batch number. Sizes 9/3 through 70/21 will also be marked with the UL Logo
Ordering description	Specify product name, size, cut length, coating option and color (for example, RHW 20/6-1200/ADH-0 (ADH = Adhesive-lined, 0= Black

***Europe only. Standard packaging 1000mm lengths

Catalog 1654025
Revised 3-13

www.te.com

Dimensions are shown for reference purposes only. Specifications subject to change.

Dimensions are in millimeters unless otherwise specified.

USA: +1 800 522 6752
Asia Pacific: +86 0 400 820 6015
UK: +44 800 267 666

For additional support numbers please visit www.te.com

RMW

Medium Wall, Polyolefin Heat-Shrinkable Tubing

Product Facts

- Withstands mechanical abuse for increased product reliability
- Highly resistant to impact and abrasion
- Installation is fast and easy
- Resistant to chemicals and moisture
- Adhesive-lined version provides a complete moisture-proof seal preventing corrosion of underlying components
- RoHS compliant

Applications

Medium wall, general purpose RMW tubing is specifically designed for use in a broad range of low-voltage applications. RMW is tough and flexible, making it particularly suited for the insulation and protection of cable joints as well as for cable repair. Uncoated RMW provides insulation and strain relief. Adhesive-lined RMW also provides an environmental seal.

RMW is a suitable choice for applications where maximum reliability and product performance, and simplified installation are required. Because RMW is heat-shrinkable, a minimum number of sizes are needed to cover a wide range of cables and splice diameters.

Installation

Minimum shrink temperature: 110°C [230°F]

Minimum full recovery temperature: 125°C [257°F]

Operating Temperature Range

-55°C to 110°C
[-67°F to 230°F]

Specifications/Approvals

Series	TE
RMW	RMW SCD

Available in:	Americas	Europe	Asia Pacific
	■	■	■

Catalog 1654025
Revised 3-13

www.te.com

Dimensions are shown for reference purposes only. Specifications subject to change.

Dimensions are in millimeters unless otherwise specified.

USA: +1 800 522 6752
Asia Pacific: +86 0 400 820 6015
UK: +44 800 267 666

For additional support numbers please visit www.te.com

RMW (Continued)

Product Dimensions

Size	Inside Diameter		Recovered Wall Thickness**
	Minimum Expanded as Supplied	Recovered After Heating	Nominal Jacket Wall
10/3	10 [0.394]	3 [0.118]	1.0 [0.039]
16/5	16 [0.630]	5 [0.197]	1.4 [0.055]
25/8	25 [0.984]	8 [0.315]	2.0 [0.079]
35/12	35 [1.378]	12 [0.472]	2.0 [0.079]
50/16	50 [1.968]	16 [0.630]	2.0 [0.079]
63/19	63 [2.480]	19 [0.748]	2.4 [0.095]
75/22	75 [2.953]	22 [0.866]	2.7 [0.106]
85/25	85 [3.346]	25 [0.984]	2.8 [0.110]
95/29	95 [3.740]	29 [1.142]	3.1 [0.122]
115/34	115 [4.527]	34 [1.339]	3.1 [0.122]
140/42	140 [5.512]	42 [1.654]	3.1 [0.122]
160/50	160 [6.299]	50 [1.968]	3.2 [0.126]
180/60	180 [7.087]	60 [2.362]	3.2 [0.126]

**Wall thickness will be less if tubing recovery is restricted during shrinkage.

Ordering Information

Color	Standard Black (-0)
Size selection	Always order the largest size that will shrink snugly over the component to be covered. Special order sizes are available upon request.
Standard packaging***	1200mm lengths
Marking	Tubing will be marked with the product name, size and batch number.
Ordering description	Specify product name, size, cut length, coating option and color (for example, RMW 25/8-1200/ADH-0 or RMW 75/22-1200/U-0 (ADH = Adhesive-lined, U = Uncoated, 0= Black)

***Europe only. Standard packaging 1000mm lengths

Catalog 1654025
Revised 3-13

www.te.com

Dimensions are shown for reference purposes only. Specifications subject to change.

Dimensions are in millimeters unless otherwise specified.

USA: +1 800 522 6752
Asia Pacific: +86 0 400 820 6015
UK: +44 800 267 666

For additional support numbers please visit www.te.com

RNF-100

Flexible, Flame-Retardant, General Purpose, Polyolefin Tubing

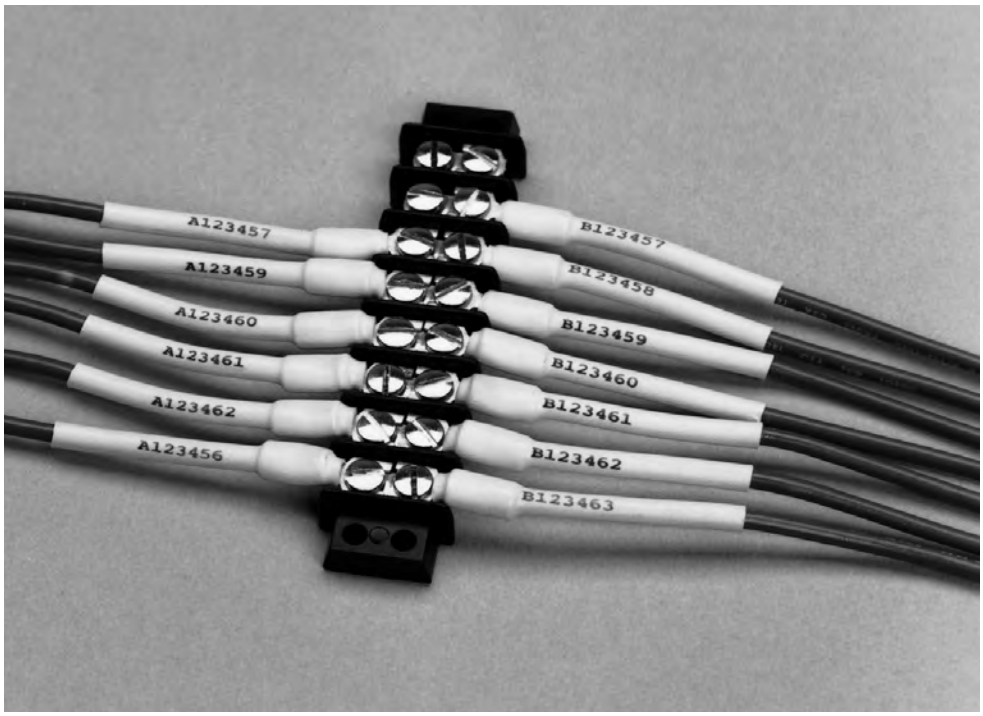

Product Facts

- 2:1 shrink ratio
- Superior abrasion and solvent resistance when compared with that of many flexible, general purpose polyolefin tubings
- Excellent physical, chemical, and electrical properties that meet or exceed industrial and military standards for highly reliable, general purpose tubing
- Flexible; conforms to irregular shapes
- Flame-retardant (colors only)
- Wide range of sizes and colors
- RoHS compliant

Applications

Designed to provide superior mechanical (abrasion, cut-through, and strain relief), thermal, and fluid-resistance performance in demanding environments. Widely used to provide insulation and strain relief of wire terminations and connections. Used for jacketing wire bundles and light-duty harnesses where superior abrasion resistance is a plus. Also used to identify and color-code electrical connections and wire bundles.

Installation

Minimum shrink temperature: 95°C [203°F]

Minimum full recovery temperature: 121°C [250°F]

Operating Temperature Range

-55°C to 135°C
[-67°F to 275°F]

Specifications/Approvals

Series	UL	CSA	Military	Industry	TE
RNF-100 Type 1 (colors)	E35586 600 V, 125°C	LR31929 600 V, 125°C	AMS-DTL-23053/5*, Class 1 Def. Stan. 59-97 Type 2B	VDE 0341 Pt 9005 Type A and B	RT-350, Type 1 RK-6001
RNF-100 Type 2 (clear)	—	—	AMS-DTL-23053/5*, Class 2 VG 95343 Pt 5 Type B	—	RT-350, Type 2 RK-6001

*Formerly MIL-I-23053/5 and MIL-DTL-23053/5.

Available in:	Americas	Europe	Asia Pacific
	■	■	■

Catalog 1654025
Revised 3-13

www.te.com

Dimensions are shown for reference purposes only. Specifications subject to change.

Dimensions are in millimeters unless otherwise specified.

USA: +1 800 522 6752
Asia Pacific: +86 0 400 820 6015
UK: +44 800 267 666

For additional support numbers please visit www.te.com

RNF-100 (Continued)

Product Dimensions

Size	Inside Diameter		Recovered Wall Thickness**
	Minimum Expanded as Supplied	Maximum Recovered After Heating	After Heating
3/64	1.2 [0.046]	0.6 [0.023]	0.40 ± 0.08 [0.016 ± 0.003]
1/16	1.6 [0.063]	0.8 [0.031]	0.43 ± 0.08 [0.017 ± 0.003]
3/32	2.4 [0.093]	1.2 [0.046]	0.51 ± 0.08 [0.020 ± 0.003]
1/8	3.2 [0.125]	1.6 [0.062]	0.51 ± 0.08 [0.020 ± 0.003]
3/16	4.8 [0.187]	2.4 [0.093]	0.51 ± 0.08 [0.020 ± 0.003]
1/4	6.4 [0.250]	3.2 [0.125]	0.64 ± 0.08 [0.025 ± 0.003]
3/8	9.5 [0.375]	4.8 [0.187]	0.64 ± 0.08 [0.025 ± 0.003]
1/2	12.7 [0.500]	6.4 [0.250]	0.64 ± 0.08 [0.025 ± 0.003]
3/4	19.1 [0.750]	9.5 [0.375]	0.76 ± 0.08 [0.030 ± 0.003]
1	25.4 [1.000]	12.7 [0.500]	0.89 ± 0.12 [0.035 ± 0.005]
1 1/4	31.8 [1.250]	15.9 [0.625]	1.02 ± 0.15 [0.040 ± 0.006]
1 1/2	38.1 [1.500]	19.1 [0.750]	1.02 ± 0.15 [0.040 ± 0.006]
2	50.8 [2.000]	25.4 [1.000]	1.14 ± 0.16 [0.045 ± 0.007]
3	76.2 [3.000]	38.1 [1.500]	1.27 ± 0.20 [0.050 ± 0.008]
4	101.6 [4.000]	50.8 [2.000]	1.40 ± 0.23 [0.055 ± 0.009]
5	127.0 [5.000]	63.5 [2.500]	1.52 ± 0.23 [0.060 ± 0.009]

**Wall thickness will be less if tubing recovery is restricted during shrinkage.

Ordering Information

Color	Standard***	Black (-0, BK), white (-9, WH), red (-2, RD), blue (-6, BU), yellow (-4, YO), green (-5, GN), clear (-X, CL)
	Nonstandard	Brown (-1, BN), orange (-3, OR), violet (-7, VT), gray (-8, GY)
Size selection	Always order the largest size that will shrink snugly over the component to be covered. Special order sizes are available upon request	
Standard packaging****	On spools or in 1.2-meter [4-foot] lengths.	
Ordering description*****	Specify product name, size and color (for example, RNF-100 1/4-0 [Europe] or RNF-100 1/4-BK [Americas].	

***Green (-5, GN) is nonstandard in all sizes in Europe, and nonstandard in sizes 1-1/4 through 5-inches in Americas.
****Available in the convenient Mini-Spool packaging/dispensing system, for sizes 3/64" up to 1".
*****Europe only. For supply to MIL, Def Stan and BS add -MS, -DS or -BS to ordering description.

Catalog 1654025
Revised 3-13

www.te.com

Dimensions are shown for reference purposes only. Specifications subject to change.

Dimensions are in millimeters unless otherwise specified.

USA: +1 800 522 6752
Asia Pacific: +86 0 400 820 6015
UK: +44 800 267 666

For additional support numbers please visit www.te.com

RNF-150

High-Performance, Flame-Resistant, Flexible, Fluoropolymer Tubing

Product Facts

- 2:1 shrink ratio
- Approximately 40 percent thinner walls than most general purpose polyolefin tubings
- High flame-resistance
- Excellent physical and electrical properties after exposure to many chemicals and solvents at 50°C [122°F] (but not recommended for use in direct contact with ketones)
- Recommended maximum temperature for use as a primary insulator: 135°C [275°F]
- RoHS compliant

Applications

Can be used for jacketing and bundling of wires to form light-duty harnesses, especially where a low profile, abrasion resistance, and flexibility are needed. Can also be used to provide insulation and strain relief of electrical connections and wire terminations, identification of wires, and packaging of components.

Installation

Minimum shrink temperature: 110°C [230°F]

Minimum full recovery temperature: 150°C [302°F]

Operating Temperature Range

-55°C to 150°C
[-67°F to 302°F]

Specifications/Approvals

Series	UL	Military	TE
RNF-150	E35586 VW-1 600 V, 150°C	AMS-DTL-23053/18*, Class 2	RT-370

*Formerly MIL-I-23053/18 and MIL-DTL-23053/18.

Available in:	Americas	Europe	Asia Pacific
	■	■	■

Catalog 1654025
Revised 3-13

www.te.com

Dimensions are shown for reference purposes only. Specifications subject to change.

Dimensions are in millimeters unless otherwise specified.

USA: +1 800 522 6752
Asia Pacific: +86 0 400 820 6015
UK: +44 800 267 666

For additional support numbers please visit www.te.com

RNF-150 (Continued)

Product Dimensions

Size	Inside Diameter		Recovered Wall Thickness**
	Minimum Expanded as Supplied	Maximum Recovered After Heating	After Heating
3/64	1.2 [0.046]	0.6 [0.023]	0.25 ± 0.05 [0.010 ± 0.002]
1/16	1.6 [0.063]	0.8 [0.031]	0.25 ± 0.05 [0.010 ± 0.002]
3/32	2.4 [0.093]	1.2 [0.046]	0.25 ± 0.05 [0.010 ± 0.002]
1/8	3.2 [0.125]	1.6 [0.062]	0.25 ± 0.05 [0.010 ± 0.002]
3/16	4.8 [0.187]	2.4 [0.093]	0.25 ± 0.05 [0.010 ± 0.002]
1/4	6.4 [0.250]	3.2 [0.125]	0.30 ± 0.08 [0.012 ± 0.003]
3/8	9.5 [0.375]	4.8 [0.187]	0.30 ± 0.08 [0.012 ± 0.003]
1/2	12.7 [0.500]	6.4 [0.250]	0.30 ± 0.08 [0.012 ± 0.003]
3/4	19.1 [0.750]	9.5 [0.375]	0.43 ± 0.08 [0.017 ± 0.003]
1	25.4 [1.000]	12.7 [0.500]	0.48 ± 0.08 [0.019 ± 0.003]

**Wall thickness will be less if tubing recovery is restricted during shrinkage.

Ordering Information

Color	Standard	Black (-0)
	Nonstandard	White (-9)
Size selection	Always order the largest size that will shrink snugly over the component to be covered. Special order sizes are available upon request.	
Standard packaging	On spools.	
Ordering description***	Specify product name, size and color (for example, RNF-150 1/4-0).	

***Europe only. For supply to MIL, Def Stan and BS add -MS, -DS or -BS to ordering description.

Catalog 1654025
Revised 3-13

www.te.com

Dimensions are shown for reference purposes only. Specifications subject to change.

Dimensions are in millimeters unless otherwise specified.

USA: +1 800 522 6752
Asia Pacific: +86 0 400 820 6015
UK: +44 800 267 666

For additional support numbers please visit www.te.com

RNF-3000

Flexible, High-Shrink-Ratio, Flame-Retardant, General Purpose, Polyolefin Tubing

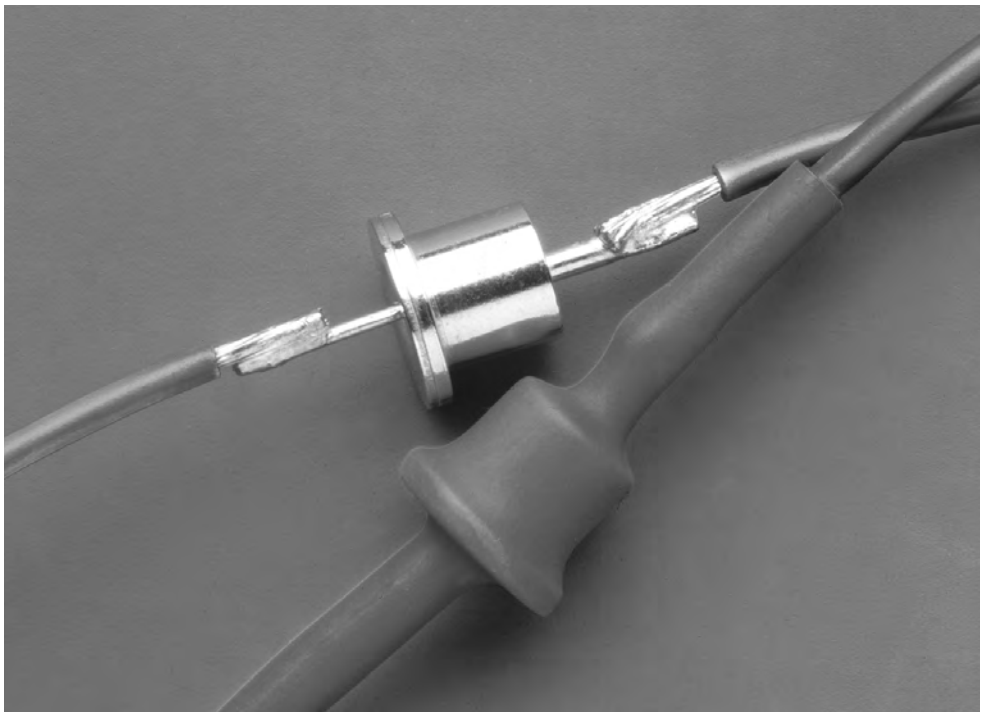

Product Facts

- 3:1 shrink ratio easily accommodates awkward, irregular shapes
- Few sizes cover a wide range of diameters, allowing reduced inventory
- Excellent physical, chemical, and electrical properties meet industry standards for highly reliable, general purpose tubing
- Flame-retardant (colors only)
- RoHS compliant

Applications

Used for insulation and strain relief of wire terminations and electrical connections. Also suitable for light-duty harnessing, jacketing, and identification of wires, cables, and electrical and electronic components.

Installation

Minimum shrink temperature: 80°C [176°F]

Minimum full recovery temperature: 120°C [248°F]

Operating Temperature Range

-55°C to 135°C
[-67°F to 275°F]

Specifications/Approvals

Series	UL	CSA	Military	Industry	TE
RNF-3000	E35586 600 V, 125°C	LR31929 600 V, 125°C	Def. Stan. 59-97 Type 2B VG 95343 Pt 5 Type A (color) VG 95343 Pt 5 Type B (clear)	VDE 0341 Pt 9005 Type A and B	RW-2053

Available in:	Americas	Europe	Asia Pacific
	■	■	■

Catalog 1654025
Revised 3-13

www.te.com

Dimensions are shown for reference purposes only. Specifications subject to change.

Dimensions are in millimeters unless otherwise specified.

USA: +1 800 522 6752
Asia Pacific: +86 0 400 820 6015
UK: +44 800 267 666

For additional support numbers please visit www.te.com

RNF-3000 (Continued)

Product Dimensions

Size	Inside Diameter		Recovered Wall Thickness*
	Minimum Expanded as Supplied	Maximum Recovered After Heating	After Heating
1.5/0.5	1.5 [0.060]	0.5 [0.019]	0.45 ± 0.10 [0.018 ± 0.003]
3/1	3 [0.118]	1 [0.039]	0.55 ± 0.10 [0.022 ± 0.003]
4.5/1.5	4.5 [0.177]	1.5 [0.059]	0.55 ± 0.10 [0.022 ± 0.003]
6/2	6 [0.236]	2 [0.079]	0.65 ± 0.10 [0.026 ± 0.003]
9/3	9 [0.354]	3 [0.118]	0.75 ± 0.12 [0.030 ± 0.004]
12/4	12 [0.472]	4 [0.157]	0.75 ± 0.12 [0.030 ± 0.004]
18/6	18 [0.709]	6 [0.236]	0.85 ± 0.12 [0.033 ± 0.004]
24/8	24 [0.944]	8 [0.315]	1.00 ± 0.18 [0.039 ± 0.007]
39/13	39 [1.534]	13 [0.512]	1.15 ± 0.20 [0.045 ± 0.008]

*Wall thickness will be less if tubing recovery is restricted during shrinkage.

Ordering Information

Color	Standard**	Black (-0), white (-9), red (-2), blue (-6), yellow (-4), clear (-X)
	Nonstandard	Brown (-1), orange (-3), green (-5), violet (-7), gray (-8)
Size selection	Always order the largest size that will shrink snugly over the component to be covered. Special order sizes are available upon request.	
Standard packaging***	On spools or in 1.2-meter [4-foot] lengths.	
Ordering description****	Specify product name, size and color (for example, RNF-3000 6/2-0).	

**Black is the only standard color in the Americas. All other colors are nonstandard.
***Only spools are standard in the Americas. 1.2 meter [4-foot] lengths are nonstandard.
****Europe only. For supply to Def Stan and BS add -DS or -BS to ordering description.

Catalog 1654025
Revised 3-13

www.te.com

Dimensions are shown for reference purposes only. Specifications subject to change.

Dimensions are in millimeters unless otherwise specified.

USA: +1 800 522 6752
Asia Pacific: +86 0 400 820 6015
UK: +44 800 267 666

For additional support numbers please visit www.te.com

RP-4800

High-Shrink-Ratio, Flame-Retardant, Polyolefin Tubing

Product Facts

- 4:1 shrink ratio
- Conforms well to highly variable substrate dimensions
- Has excellent physical, chemical, and electrical properties that meet or exceed industrial and military standards
- Shows no significant degradation when exposed to common solvents and chemicals, including aviation fuel and hydraulic fluid
- RoHS compliant

Applications

Well-suited for repairing harnesses or cables; will pass over a large-diameter connector or transition, and then shrink down onto a smaller-diameter jacket. Can insulate or protect a substrate of varying dimensions. Also provides the abrasion and fluid resistance required in harnessing applications.

Installation

Minimum shrink temperature: 95°C [203°F]

Minimum full recovery temperature: 121°C [250°F]

Operating Temperature Range

-55°C to 135°C
[-67°F to 275°F]

Specifications/Approvals

Series	UL	Military	Industry	TE
RP-4800	E35586 600V, 125°C (black only)	AMS-DTL-23053/5*, Class 1 Overexpanded VG 95343 Pt 5 Type A	VDE 0341 Pt 9005 Type A	RT-1122

*Formerly MIL-I-23053/5 and MIL-DTL-23053/5.

Available in:	Americas	Europe	Asia Pacific
	■	■	■

Catalog 1654025
Revised 3-13

www.te.com

Dimensions are shown for reference purposes only. Specifications subject to change.

Dimensions are in millimeters unless otherwise specified.

USA: +1 800 522 6752
Asia Pacific: +86 0 400 820 6015
UK: +44 800 267 666

For additional support numbers please visit www.te.com

RP-4800 (Continued)

Product Dimensions

Size	Inside Diameter		Recovered Wall Thickness**
	Minimum Expanded as Supplied	Maximum Recovered After Heating	After Heating
No. 1	25.4 [1.000]	7.0 [0.275]	1.14 ± 0.18 [0.045 ± 0.007]
No. 2	50.8 [2.000]	14.0 [0.550]	1.14 ± 0.18 [0.045 ± 0.007]
No. 3	76.2 [3.000]	20.6 [0.810]	1.14 ± 0.18 [0.045 ± 0.007]
No. 4	101.6 [4.000]	26.7 [1.050]	1.14 ± 0.18 [0.045 ± 0.007]
No. 5	25.4 [1.000]	11.7 [0.462]	1.14 ± 0.18 [0.045 ± 0.007]
No. 6	60.3 [2.375]	17.3 [0.680]	1.14 ± 0.18 [0.045 ± 0.007]
No. 7	76.2 [3.000]	21.3 [0.840]	1.14 ± 0.18 [0.045 ± 0.007]
No. 8	95.3 [3.750]	23.6 [0.930]	1.14 ± 0.18 [0.045 ± 0.007]
No. 9	114.3 [4.500]	36.8 [1.450]	1.14 ± 0.18 [0.045 ± 0.007]
No. 10	38.1 [1.500]	9.5 [0.375]	1.14 ± 0.18 [0.045 ± 0.007]
No. 11	19.1 [0.750]	4.6 [0.180]	1.14 ± 0.18 [0.045 ± 0.007]

**Wall thickness will be less if tubing recovery is restricted during shrinkage.

Ordering Information

Color	Standard	Black (-0)
	Nonstandard	White (-9), red (-2), blue (-6), yellow (-4), green (-5), brown (-1), orange (-3), violet (-7), gray (-8)
Size selection	Always order the largest size that will shrink snugly over the component to be covered. Special order sizes are available upon request.	
Standard packaging	On spools or in 1.2-meter [4-foot] lengths.	
Ordering description***	Specify product name, size and color (for example, RP-4800 NO.1-0).	

***Europe only. For supply to MIL, Def Stan and BS add -MS, -DS or -BS to ordering description.

Catalog 1654025
Revised 3-13

www.te.com

Dimensions are shown for reference purposes only. Specifications subject to change.

Dimensions are in millimeters unless otherwise specified.

USA: +1 800 522 6752
Asia Pacific: +86 0 400 820 6015
UK: +44 800 267 666

For additional support numbers please visit www.te.com

RPPM

Flexible, Dual Wall, Moisture-Proof, Heat-Shrinkable Tubing

Product Facts

- Environmental sealing
- Excellent mechanical strength
- Abrasion resistance
- 4:1 shrink ratio
- RoHS compliant

Applications

RPPM is a flexible, heat-shrinkable, dual wall tubing with an integrally bonded meltable adhesive liner. Available in clear and black, the tough outer jacket offers excellent mechanical strength. RPPM is used for moisture-proof encapsulation of a wide variety of components. In particular, it adheres well to PVC. The high-shrink-ratio allows RPPM to be used with a range of dimensions. Clear RPPM offers excellent clarity for protection of substrates that may need to be inspected during service. Black RPPM has a high gloss finish suitable for cosmetic applications.

Installation

Minimum shrink temperature: 60°C [140°F]

Minimum full recovery temperature: 80°C [176°F]

Operating Temperature Range

-40°C to 85°C
[-40°F to 185°F]

Specifications/Approvals

Series	TE
RPPM	RK-6214

Available in:	Americas	Europe	Asia Pacific
	■	■	■

Catalog 1654025
Revised 3-13

www.te.com

Dimensions are shown for reference purposes only. Specifications subject to change.

Dimensions are in millimeters unless otherwise specified.

USA: +1 800 522 6752
Asia Pacific: +86 0 400 820 6015
UK: +44 800 267 666

For additional support numbers please visit www.te.com

RPPM (Continued)

Product Dimensions

Size	Inside Diameter		Recovered Wall Thickness*	
	Minimum Expanded as Supplied	Maximum Recovered After Heating	Nominal Total Wall After Heating	Nominal Adhesive Wall After Heating
4/1	4.0 [0.158]	1.0 [0.039]	0.8 [0.032]	0.3 [0.012]
8/2	8.0 [0.315]	2.0 [0.079]	0.9 [0.035]	0.3 [0.012]
12/3	12.0 [0.472]	3.0 [0.118]	1.2 [0.047]	0.4 [0.016]
16/4	16.0 [0.630]	4.0 [0.158]	1.5 [0.059]	0.5 [0.020]

*Wall thickness will be less if tubing recovery is restricted during shrinkage.

Ordering Information

Color	Standard	Clear (-X)
	Nonstandard	Black (-0)
Size selection	Always order the largest size that will shrink snugly over the component to be covered. Special order sizes are available upon request.	
Standard packaging	On spools, in 1.2 meter [4-foot] lengths or cut pieces.	
Ordering description	Specify product name, size and color (for example, RPPM 4/1-X).	

Dimensions are shown for reference purposes only. Specifications subject to change.

Dimensions are in millimeters unless otherwise specified.

USA: +1 800 522 6752
Asia Pacific: +86 0 400 820 6015
UK: +44 800 267 666

For additional support numbers please visit www.te.com

RT-3

Semirigid, Flame-Retardant, Polyolefin Tubing

Product Facts

- 2.5:1 shrink ratio
- Tightly controlled expanded diameters
- High abrasion resistance
- Semirigidity that transfers flex stress away from typically weak points such as solder and crimp joints, helping to ensure a reliable connection
- Excellent chemical and solvent resistance
- Outstanding physical and electrical performance
- RoHS compliant

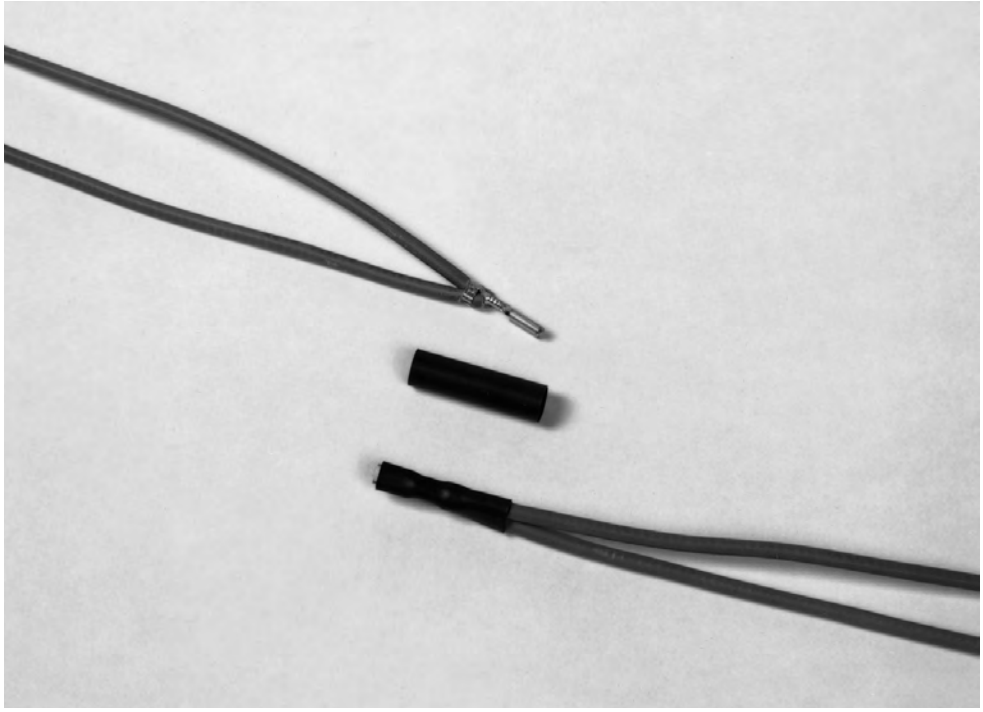

Applications

Suitable for wire strain-relief applications — soldered or crimped connections, wire splices, terminations. Well-suited for use with semiautomated production equipment requiring tubing with a tightly controlled expanded diameter. Acts as a tough covering for delicate components; provides mechanical protection.

Installation

Minimum shrink temperature: 110°C [230°F]

Minimum full recovery temperature: 135°C [275°F]

Operating Temperature Range

-55°C to 135°C
[-67°F to 275°F]

Specifications/Approvals

Series	UL	CSA	TE
RT-3	E35586 600 V, 125°C	LR31929 (black only) 600 V, 125°C	RT-360*

*Except dimensions and longitudinal change.

Available in:	Americas	Europe	Asia Pacific
	■		■

Catalog 1654025
Revised 3-13

www.te.com

Dimensions are shown for reference purposes only. Specifications subject to change.

Dimensions are in millimeters unless otherwise specified.

USA: +1 800 522 6752
Asia Pacific: +86 0 400 820 6015
UK: +44 800 267 666

For additional support numbers please visit www.te.com

RT-3 (Continued)

Product Dimensions

Size	Inside Diameter		Recovered Wall Thickness**
	Minimum Expanded as Supplied	Maximum Recovered After Heating	After Heating
No. 1	6.1 ± 0.4 [0.240 ± 0.015]	2.4 [0.095]	0.79 ± 0.08 [0.031 ± 0.003]
No. 2	8.1 ± 0.4 [0.320 ± 0.015]	3.2 [0.125]	0.79 ± 0.08 [0.031 ± 0.003]
No. 3	9.5 ± 0.5 [0.375 ± 0.020]	3.8 [0.150]	0.79 ± 0.08 [0.031 ± 0.003]
No. 4	12.3 ± 0.5 [0.485 ± 0.020]	5.1 [0.200]	0.79 ± 0.08 [0.031 ± 0.003]

**Wall thickness will be less if tubing recovery is restricted during shrinkage.

Ordering Information

Color	Black (-0) only
Size selection	Always order the largest size that will shrink snugly over the component to be covered. Special order sizes are available upon request.
Standard packaging	In 1-inch cut pieces or in 1.2-meter [4-foot] lengths.
Ordering description	Specify product name, size and color (for example, RT-3 No. 1-0).

Dimensions are shown for reference purposes only. Specifications subject to change.

Dimensions are in millimeters unless otherwise specified.

USA: +1 800 522 6752
Asia Pacific: +86 0 400 820 6015
UK: +44 800 267 666

For additional support numbers please visit www.te.com

RT-375

Clear, Flame-Resistant, Flexible, Fluoropolymer Tubing

Product Facts

- 2:1 shrink ratio
- Exceptional clarity and clarity stability
- Toughness, chemical resistance, and high-temperature performance
- High flame-resistance
- Approximately 40 percent thinner walls than most general purpose polyolefin tubings
- Recommended maximum temperature for use as a primary insulator: 135°C [275°F]
- RoHS compliant

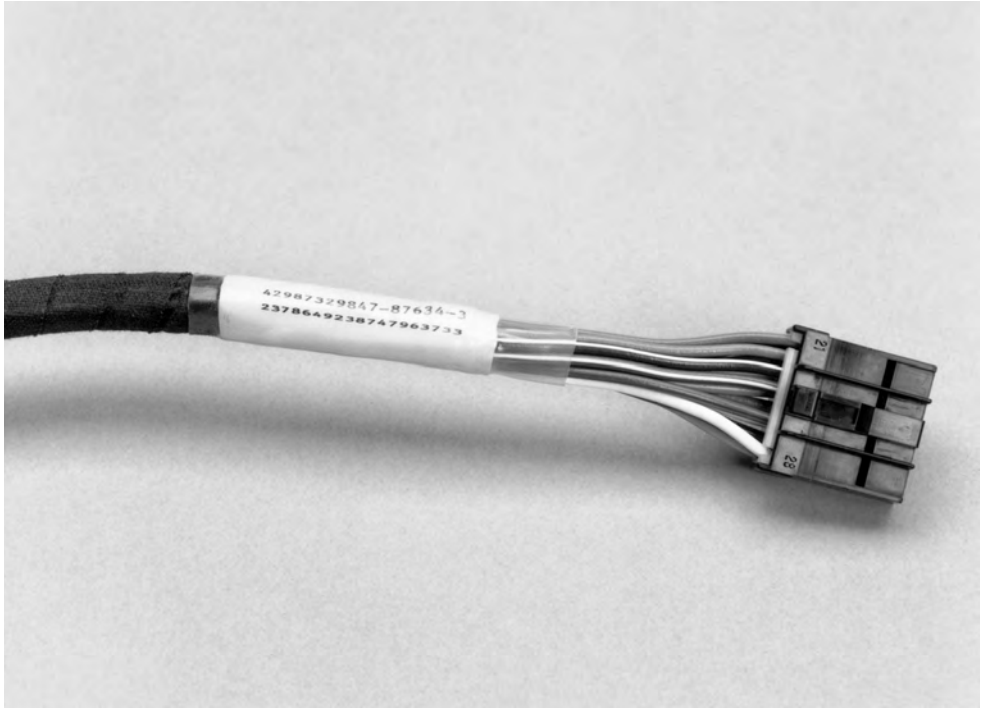

Applications

Protects wire and cable markers subject to extreme abuse, while permitting full inspectability of each item covered. Provides bundling and jacketing of wires and cables, protecting them from mechanical and chemical abuse. Protects electronic components while permitting their identification and inspection.

Installation

Minimum shrink temperature: 125°C [257°F]

Minimum full recovery temperature: 150°C [302°F]

Operating Temperature Range

-55°C to 150°C
[-67°F to 302°F]

Specifications/Approvals

Series	UL	CSA	Military	TE
RT-375	E35586 VW-1 600 V, 150°C	LR31929 VW-1 600 V, 150°C	AMS-DTL-23053/18*, Class 2	RT-375

*Formerly MIL-I-23053/18 and MIL-DTL-23053/18.

Available in:	Americas	Europe	Asia Pacific
	■	■	■

Catalog 1654025
Revised 3-13

www.te.com

Dimensions are shown for reference purposes only. Specifications subject to change.

Dimensions are in millimeters unless otherwise specified.

USA: +1 800 522 6752
Asia Pacific: +86 0 400 820 6015
UK: +44 800 267 666

For additional support numbers please visit www.te.com

RT-375 (Continued)

Product Dimensions

Size	Inside Diameter		Recovered Wall Thickness**
	Minimum Expanded as Supplied	Maximum Recovered After Heating	After Heating
3/64	1.2 [0.046)	0.6 [0.023]	0.25 ± 0.05 [0.010 ± 0.002]
1/16	1.6 [0.063]	0.8 [0.031]	0.25 ± 0.05 [0.010 ± 0.002]
3/32	2.4 [0.093]	1.2 [0.046]	0.25 ± 0.05 [0.010 ± 0.002]
1/8	3.2 [0.125]	1.6 [0.062]	0.25 ± 0.05 [0.010 ± 0.002]
3/16	4.8 [0.187]	2.4 [0.093]	0.25 ± 0.05 [0.010 ± 0.002]
1/4	6.4 [0.250]	3.2 [0.125]	0.30 ± 0.08 [0.012 ± 0.003]
3/8	9.5 [0.375]	4.8 [0.187]	0.30 ± 0.08 [0.012 ± 0.003]
1/2	12.7 [0.500]	6.4 [0.250]	0.30 ± 0.08 [0.012 ± 0.003]
3/4	19.1 [0.750]	9.5 [0.375]	0.43 ± 0.08 [0.017 ± 0.003]
1	25.4 [1.000]	12.7 [0.500]	0.48 ± 0.08 [0.019 ± 0.003]

**Wall thickness will be less if tubing recovery is restricted during shrinkage.

Ordering Information

Color	Standard Clear (-X)
Size selection	Always order the largest size that will shrink snugly over the component to be covered. Special order sizes are available upon request.
Standard packaging	On spools.
Ordering description***	Specify product name, size and color (for example, RT-375 1/4-X).

***Europe only. For supply to MIL, Def Stan and BS add -MS, -DS or -BS to ordering description.

Catalog 1654025
Revised 3-13

www.te.com

Dimensions are shown for reference purposes only. Specifications subject to change.

Dimensions are in millimeters unless otherwise specified.

USA: +1 800 522 6752
Asia Pacific: +86 0 400 820 6015
UK: +44 800 267 666

For additional support numbers please visit www.te.com

RT555

Fluid-Resistant, Chemical-Resistant, Crosslinked Fluoropolymer Tubing with Extended Temperature Range

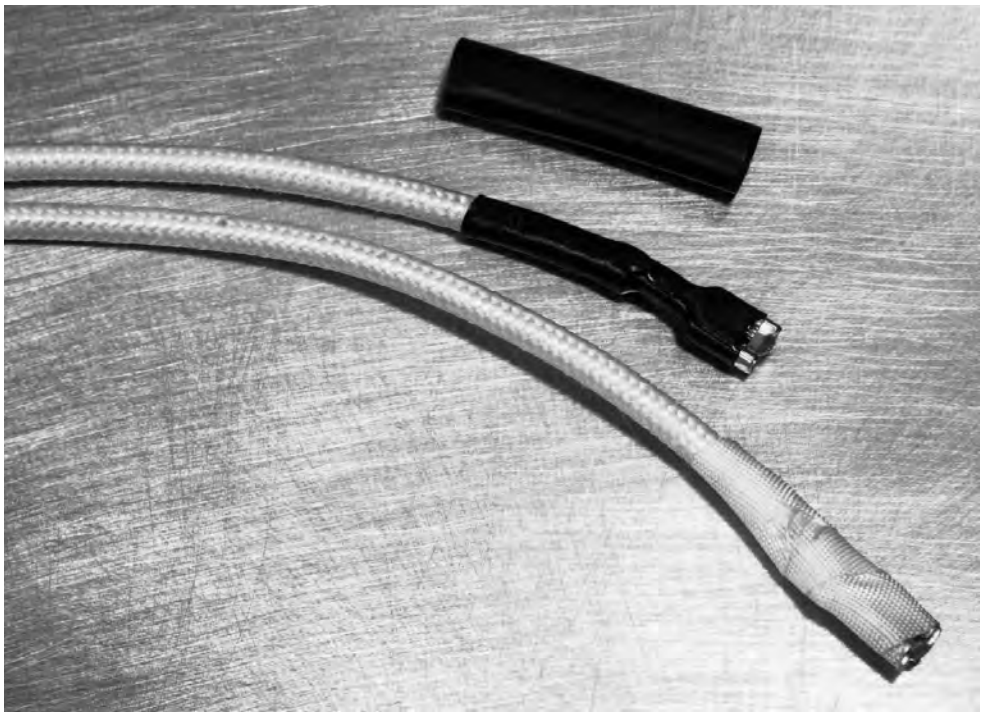

Product Facts

- Resistance to high temperatures, solvents, corrosive chemicals, and radiation
- Extreme resistance to hydrocarbons
- Low outgassing (successfully tested for NASA outgassing requirements)
- Highly flame-retardant
- 40 percent lighter weight than tubing made with Viton® fluoroelastomer
- System 300 tubing
- RoHS compliant

Applications

Suitable for commercial applications requiring heat resistance (electrical and hydraulic systems near aircraft or automotive engines or in fuel tanks), applications in chemically exposed environments (industrial process equipment in the pulp and paper, steel, and chemical industries), and equipment for handling caustic or dangerous chemicals or inks. Use for insulation and strain relief on appliances (electric ranges, microwave ovens, gas grills, and industrial paint-drying equipment) and for protection of delicate electronic instruments in down-hole applications.

Installation

Minimum shrink temperature: 150°C [302°F]

Minimum full recovery temperature: 220°C [428°F]

Operating Temperature Range

-65°C to 200°C
[-85°F to 392°F]

Specifications/Approvals

Series	UL	TE
RT555	Listed for 185°C for 100,000-hr continuous use (File E85381) Listed for 200°C for 40,000-hr cumulative intermittent exposure	RT-555

Available in:	Americas	Europe	Asia Pacific
	■	■	■

Viton is a trademark of Dupont Performance Elastomers LLC.

Catalog 1654025
Revised 3-13

www.te.com

Dimensions are shown for reference purposes only. Specifications subject to change.

Dimensions are in millimeters unless otherwise specified.

USA: +1 800 522 6752
Asia Pacific: +86 0 400 820 6015
UK: +44 800 267 666

For additional support numbers please visit www.te.com

RT555 (Continued)

Product Dimensions

Size	Inside diameter		Recovered wall thickness* After heating		
	Minimum expanded as supplied	Maximum recovered after heating	Minimum	Maximum	Nominal
1/8	3.18 [0.125]	1.57 [0.062]	0.25 [0.010]	0.41 [0.016]	0.30 [0.012]
3/16	4.75 [0.187]	2.36 [0.093]	0.28 [0.011]	0.46 [0.018]	0.36 [0.014]
1/4	6.35 [0.250]	3.18 [0.125]	0.33 [0.013]	0.51 [0.020]	0.41 [0.016]
3/8	9.53 [0.375]	4.75 [0.187]	0.41 [0.016]	0.58 [0.023]	0.48 [0.019]
1/2	12.70 [0.500]	6.35 [0.250]	0.41 [0.016]	0.58 [0.023]	0.48 [0.019]
5/8	15.88 [0.625]	7.95 [0.313]	0.48 [0.019]	0.66 [0.026]	0.56 [0.022]
3/4	19.05 [0.750]	9.53 [0.375]	0.61 [0.024]	0.79 [0.031]	0.69 [0.027]
1	25.40 [1.000]	12.70 [0.500]	0.71 [0.028]	0.89 [0.035]	0.79 [0.031]
1 1/4	31.75 [1.250]	15.88 [0.625]	0.76 [0.030]	0.94 [0.037]	0.84 [0.033]
1 1/2	38.10 [1.500]	19.05 [0.750]	0.86 [0.034]	1.04 [0.041]	0.94 [0.037]
2	50.80 [2.000]	25.40 [1.000]	0.94 [0.037]	1.12 [0.044]	1.02 [0.040]

*Wall thickness will be less if tubing recovery is restricted during shrinkage.

Ordering Information

Color	Standard	Black (-0)
Size selection	Always order the largest size that will shrink snugly over the component to be covered. Special order sizes are available upon request.	
Standard packaging	On spools.	
Ordering description	Specify product name, size and color (for example, RT555 1/8-0-SP).	

Part Numbering

RT555	- 1/8	-0	-SP
Material	Size	Color	Package

Catalog 1654025
Revised 3-13

www.te.com

Dimensions are shown for reference purposes only. Specifications subject to change.

Dimensions are in millimeters unless otherwise specified.

USA: +1 800 522 6752
Asia Pacific: +86 0 400 820 6015
UK: +44 800 267 666

For additional support numbers please visit www.te.com

High Temperature Sealing Sleeves

High Temperature, Heat Shrinkable, Fluid Resistant Sealing Sleeves

High temperature fluoropolymer sealing sleeve provides a robust, lightweight cover which shrinks to environmentally seal in-line compression joints and terminal lugs.

Product Facts

- **Sealing material is pre-installed in high temperature heat shrink sleeve**
- **No oven curing equipment needed**
- **Available in four product sizes in two different lengths**
- **Labor saving preinstall sealing sleeves**
- **Temperature and fluid resistant fluoropolymer tubing rated to 200˚C continuous with excursions to 260˚C**
- **TE's product is thin, tough and lightweight with robust fluid resistance**

Applications

High temperature circuit lug and splice covers

Aerospace

Ground Vehicles

Commercial Aviation

Materials

Insulation Sleeve:

Heat-shrinkable, radiation cross-linked modified fluoropolymer.

Color: Black

Meltable Insert:

Environmentally resistant modified thermoplastic fluoroelastomer.

Color: Light Blue

Standards & Specs

Meets TE RT-555 high temperature fluoropolymer fluid specification.

Meets FAR Part 25 appendix F of the FAA standards.

Application Tooling

A heat gun rated at 2200 watts or greater is recommended.

Available in:	Americas	Europe	Asia Pacific
	■	■	■

Catalog 1654025
Revised 3-13

www.te.com

Dimensions are shown for reference purposes only. Specifications subject to change.

Dimensions are in millimeters unless otherwise specified.

USA: +1 800 522 6752
Asia Pacific: +86 0 400 820 6015
UK: +44 800 267 666

For additional support numbers please visit www.te.com

High Temperature Sealing Sleeves (Continued)

Product Dimensions

Part Description	Product Dimensions L Maximum	B Nominal	ØA Minimum
RT-555-3/8-2.75-A260-0	69.9 [2.75]	25.4 [1.00]	8.3 [0.33]
RT-555-3/8-4.75-A260-0	120.7 [4.75]	76.2 [3.00]	8.4 [0.33]
RT-555-1/2-2.75-A260-0	69.9 [2.75]	25.4 [1.00]	11.4 [0.45]
RT-555-1/2-5.75-A260-0	146.1 [5.75]	101.6 [4.00]	11.4 [0.45]
RT-555-3/4-3.00-A260-0	76.2 [3.00]	31.8 [1.25]	17.7 [0.70]
RT-555-3/4-6.75-A260-0	171.5 [6.75]	127.0 [5.00]	17.7 [0.70]
RT-555-1.0-3.75-A260-0	95.3 [3.75]	50.8 [2.00]	22.8 [0.90]
RT-555-1.0-6.75-A260-0	171.5 [6.75]	127.0 [5.00]	22.8 [0.90]

Dimensions are mm [inches]

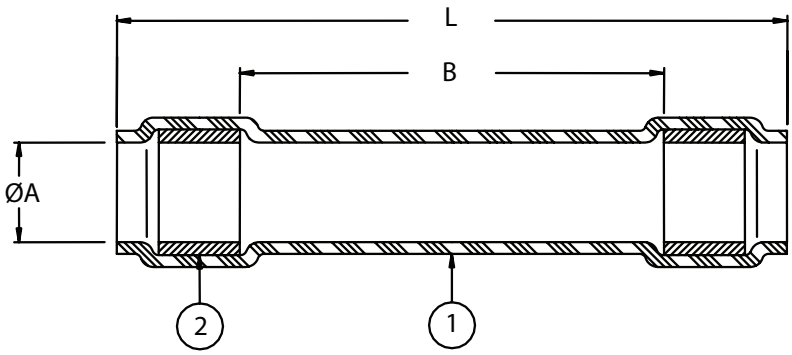

Ordering Information

Minimum Order Quantity: 200 pieces for all sizes

Catalog 1654025
Revised 3-13

www.te.com

Dimensions are shown for reference purposes only. Specifications subject to change.

Dimensions are in millimeters unless otherwise specified.

USA: +1 800 522 6752
Asia Pacific: +86 0 400 820 6015
UK: +44 800 267 666

For additional support numbers please visit www.te.com

RT-770

NBCCS Harness Tubing

Product Facts

- **Hardened to withstand effect of NBC decontamination agents including DS-2 and STB**
- **Tested in live agent tests with HD, VX and TGD for interior and exterior exposure**
- **Meets the demands of flammability and fluid resistance of current military ground vehicles**
- **Offered with compatible adhesive, wire and other harness components for a survivable system**

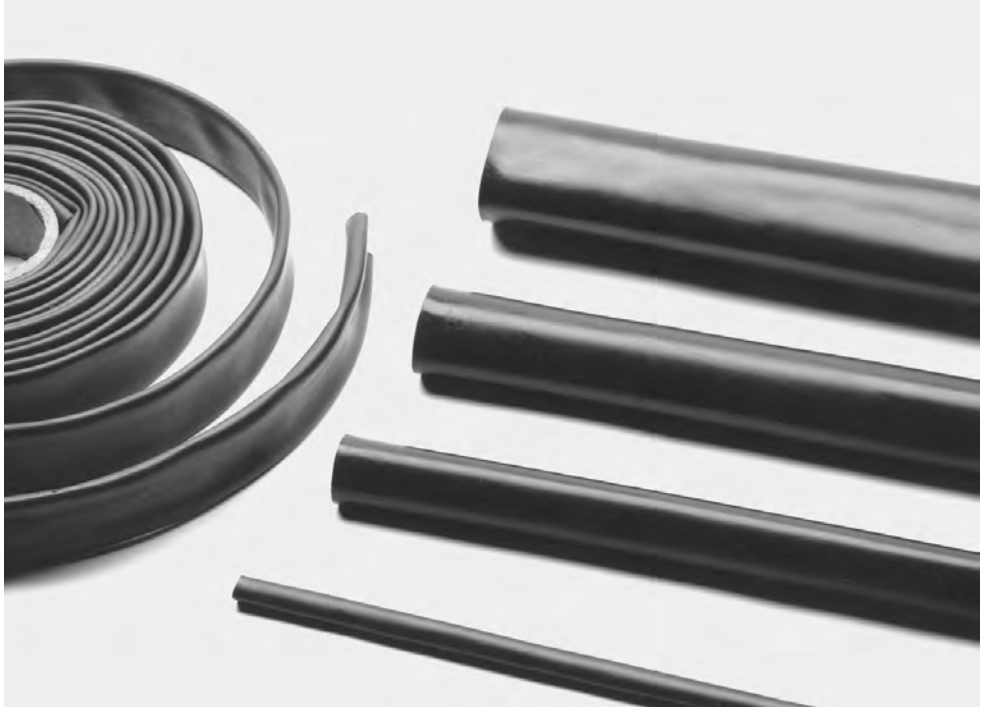

Applications

RT-770 heat-shrinkable tubing is made of a chemically resistant fluoroelastomer that is suited for use where moisture, fungus and vehicle fluids and fuels are a concern.

Chemical resistance has been tested in accordance with Army TOP 8-2-510 for NBC contamination survivability.

Installation

Tubing shrinks with temperatures in excess of 150°C

Product is provided with a 2:1 expansion ratio

Optimum application range is 10% above recovered ID to 85% of the expanded ID.

Operating Temperature Range

-55°C to 125°C
[-67°F to 257°F]

Available in:	Americas	Europe	Asia Pacific
	■	■	■

Catalog 1654025
Revised 3-13

www.te.com

Dimensions are shown for reference purposes only. Specifications subject to change.

Dimensions are in millimeters unless otherwise specified.

USA: +1 800 522 6752
Asia Pacific: +86 0 400 820 6015
UK: +44 800 267 666

For additional support numbers please visit www.te.com

RT-770 (Continued)

Product Dimensions

Size	Inside Diameter		Recovered Wall Thickness		
	Minimum Expanded as Supplied	Maximum Recovered After Heating	Minimum	Maximum	Nominal
1/8	3.17 [0.125]	1.57 [0.062]	0.28 [0.011]	0.43 [0.017]	0.35 [0.014]
3/16	4.74 [0.187]	2.36 [0.093]	0.33 [0.013]	0.48 [0.019]	0.41 [0.016]
1/4	6.35 [0.250]	3.17 [0.125]	0.38 [0.015]	0.56 [0.022]	0.46 [0.018]
3/8	9.50 [0.375]	4.74 [0.187]	0.46 [0.018]	0.61 [0.024]	0.51 [0.020]
1/2	12.70 [0.500]	6.35 [0.250]	0.51 [0.020]	0.66 [0.026]	0.56 [0.022]
5/8	15.90 [0.625]	7.93 [0.312]	0.58 [0.023]	0.76 [0.030]	0.66 [0.026]
3/4	19.05 [0.750]	9.50 [0.375]	0.74 [0.029]	0.91 [0.036]	0.81 [0.032]
1	25.40 [1.000]	12.70 [0.500]	0.86 [0.034]	1.04 [0.041]	0.99 [0.037]
1 1/4	31.75 [1.250]	15.87 [0.625]	0.94 [0.037]	1.12 [0.044]	1.01 [0.040]
1 1/2	38.10 [1.500]	19.05 [0.750]	1.04 [0.041]	1.22 [0.048]	1.14 [0.045]
2	50.80 [2.000]	25.40 [1.000]	1.12 [0.044]	1.32 [0.052]	1.22 [0.048]

Ordering Information

Color	Black (-0) only
Size selection	Always order the largest size that will shrink snugly over the component to be covered. Special order sizes are available upon request and are subject to a minimum purchase.
Standard packaging	On spools. Quantity varies by size.
Ordering description	Specify product name, size and color (for example, RT-770-1/8-0-SP).

Part Numbering

RT-770	- 1/8	-0	-SP
Material	Size	Color	Package

Catalog 1654025
Revised 3-13

www.te.com

Dimensions are shown for reference purposes only. Specifications subject to change.

Dimensions are in millimeters unless otherwise specified.

USA: +1 800 522 6752
Asia Pacific: +86 0 400 820 6015
UK: +44 800 267 666

For additional support numbers please visit www.te.com

RT-780

NBCCS Harness Tubing

Product Facts

- **Hardened to withstand effect of NBC decontamination agents including DS-2 and STB**
- **Tested in live agent tests with HD, VX and TGD for interior and exterior exposure**
- **Meets the demands of flammability and fluid resistance of current military ground vehicles**
- **Offered with compatible adhesive, wire and other harness components for a survivable system**

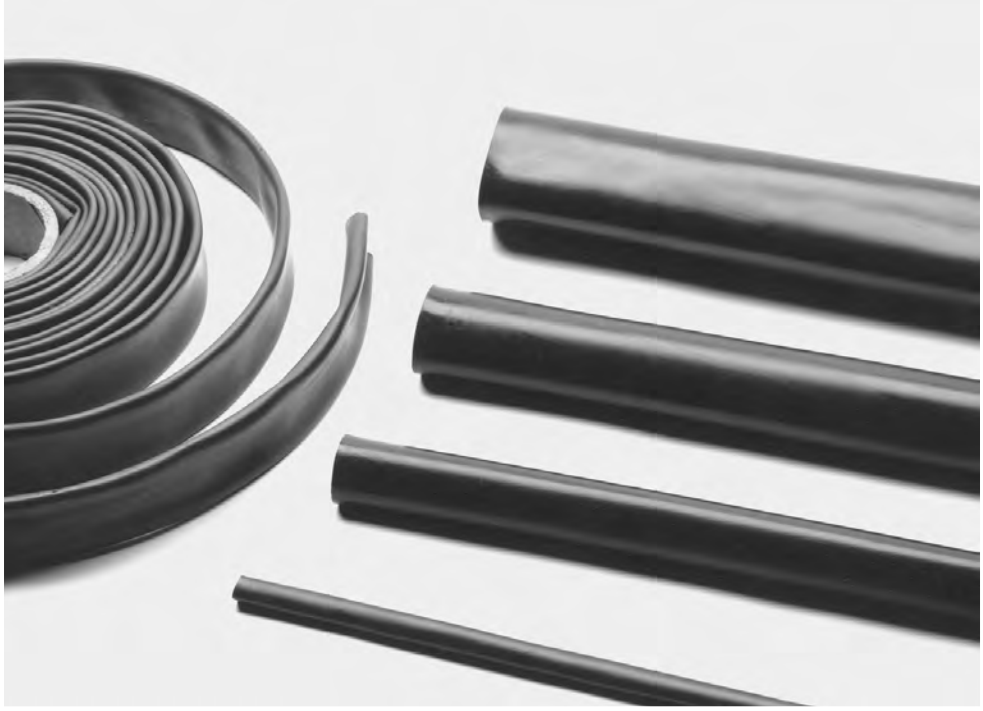

Applications

RT-780 heat-shrinkable tubing is made of a chemically resistant fluoroelastomer that is suited for use where moisture, fungus and vehicle fluids and fuels are a concern.

Chemical resistance has been tested in accordance with Army TOP 8-2-510 for NBC contamination survivability.

Installation

Tubing shrinks with temperatures in excess of 200°C

Product is provided with a 2:1 expansion ratio

Optimum application range is 10% above recovered ID to 85% of the expanded ID.

Operating Temperature Range

-55°C to 175°C
[-67°F to 347°F]

Available in:	Americas	Europe	Asia Pacific
	■	■	■

Catalog 1654025
Revised 3-13

www.te.com

Dimensions are shown for reference purposes only. Specifications subject to change.

Dimensions are in millimeters unless otherwise specified.

USA: +1 800 522 6752
Asia Pacific: +86 0 400 820 6015
UK: +44 800 267 666

For additional support numbers please visit www.te.com

RT-780 (Continued)

Product Dimensions

Size	Inside Diameter		Recovered Wall Thickness		
	Minimum Expanded as Supplied	Maximum Recovered After Heating	Minimum	Maximum	Nominal
1/8	3.17 [0.125]	1.57 [0.062]	0.28 [0.011]	0.43 [0.017]	0.35 [0.014]
3/16	4.74 [0.187]	2.36 [0.093]	0.33 [0.013]	0.48 [0.019]	0.41 [0.016]
1/4	6.35 [0.250]	3.17 [0.125]	0.38 [0.015]	0.56 [0.022]	0.46 [0.018]
3/8	9.50 [0.375]	4.74 [0.187]	0.46 [0.018]	0.61 [0.024]	0.51 [0.020]
1/2	12.70 [0.500]	6.35 [0.250]	0.51 [0.020]	0.66 [0.026]	0.56 [0.022]
5/8	15.90 [0.625]	7.93 [0.312]	0.58 [0.023]	0.76 [0.030]	0.66 [0.026]
3/4	19.05 [0.750]	9.50 [0.375]	0.74 [0.029]	0.91 [0.036]	0.81 [0.032]
1	25.40 [1.000]	12.70 [0.500]	0.86 [0.034]	1.04 [0.041]	0.99 [0.037]
1 1/4	31.75 [1.250]	15.87 [0.625]	0.94 [0.037]	1.12 [0.044]	1.01 [0.040]
1 1/2	38.10 [1.500]	19.05 [0.750]	1.04 [0.041]	1.22 [0.048]	1.14 [0.045]
2	50.80 [2.000]	25.40 [1.000]	1.12 [0.044]	1.32 [0.052]	1.22 [0.048]

Ordering Information

Color	Standard	Black (-0)
	Nonstandard	Orange (-3)
Size selection	Always order the largest size that will shrink snugly over the component to be covered. Special order sizes are available upon request and are subject to a minimum purchase.	
Standard packaging	On spools. Quantity varies by size.	
Ordering description	Specify product name, size and color (for example, RT-780-1/8-0-SP).	

Part Numbering

RT-780	- 1/8	-0	-3	-SP
Material	Size	Black	Orange	Package

Catalog 1654025
Revised 3-13

www.te.com

Dimensions are shown for reference purposes only. Specifications subject to change.

Dimensions are in millimeters unless otherwise specified.

USA: +1 800 522 6752
Asia Pacific: +86 0 400 820 6015
UK: +44 800 267 666

For additional support numbers please visit www.te.com

RT-790

NBCCS Harness Tubing

Product Facts

- **Hardened to withstand effect of NBC decontamination agents including DS-2 and STB**
- **Tested in live agent tests with HD, VX and TGD for interior and exterior exposure**
- **Meets the demands of flammability and fluid resistance of current military ground vehicles**
- **Offered with compatible adhesive, wire and other harness components for a survivable system**

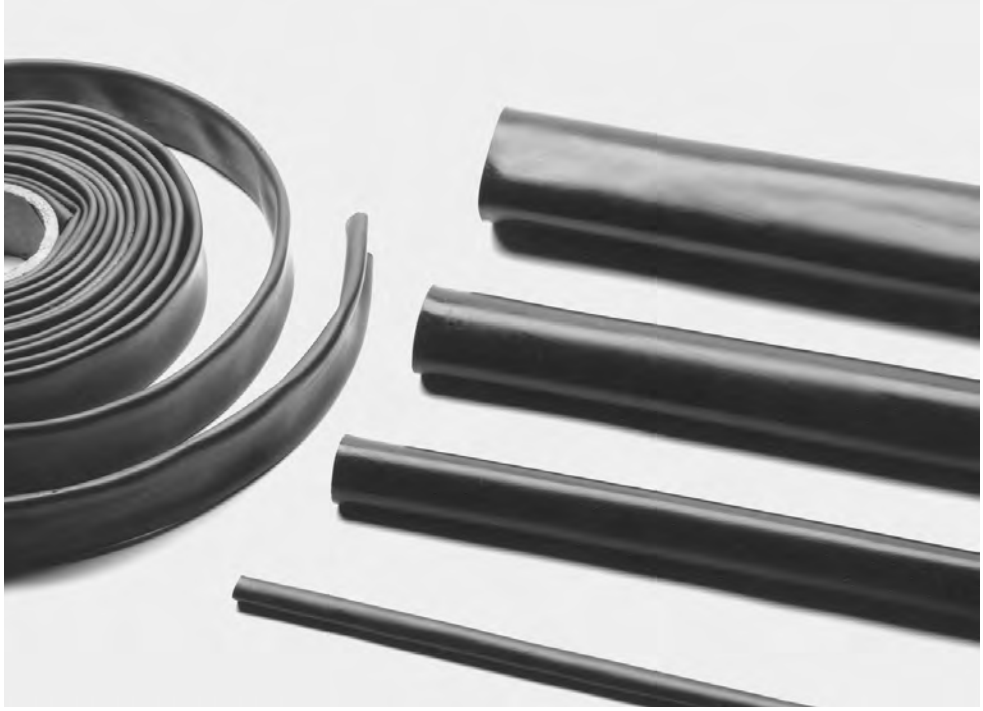

Applications

RT-790 heat-shrinkable tubing is made of a chemically resistant fluoroelastomer that is suited for use where moisture, fungus and vehicle fluids and fuels are a concern.

Chemical resistance has been tested in accordance with Army TOP 8-2-510 for NBC contamination survivability.

Installation

Tubing shrinks with temperatures in excess of 250°C

Product is provided with a 2:1 expansion ratio

Optimum application range is 10% above recovered ID to 85% of the expanded ID.

Operating Temperature Range

-55°C to 200°C
[-67°F to 392°F]

Available in:	Americas	Europe	Asia Pacific
	■	■	■

Catalog 1654025
Revised 3-13

www.te.com

Dimensions are shown for reference purposes only. Specifications subject to change.

Dimensions are in millimeters unless otherwise specified.

USA: +1 800 522 6752
Asia Pacific: +86 0 400 820 6015
UK: +44 800 267 666

For additional support numbers please visit www.te.com

RT-790 (Continued)

Product Dimensions

Size	Inside Diameter		Recovered Wall Thickness		
	Minimum Expanded as Supplied	Maximum Recovered After Heating	Minimum	Maximum	Nominal
1/8	3.17 [0.125]	1.57 [0.062]	0.25 [0.010]	0.41 [0.016]	0.30 [0.012]
3/16	4.74 [0.187]	2.36 [0.093]	0.28 [0.011]	0.46 [0.018]	0.36 [0.014]
1/4	6.35 [0.250]	3.17 [0.125]	0.33 [0.013]	0.51 [0.020]	0.41 [0.016]
3/8	9.50 [0.375]	4.74 [0.187]	0.41 [0.016]	0.58 [0.023]	0.48]0.019]
1/2	12.70 [0.500]	6.35 [0.250]	0.41 [0.016]	0.58 [0.023]	0.48 [0.019]
5/8	15.90 [0.625]	7.95 [0.313]	0.48 [0.019]	0.66 [0.026]	0.56 [0.022]
3/4	19.05 [0.750]	9.50 [0.375]	0.61 [0.024]	0.79 [0.031]	0.69 [0.027]
1	25.40 [1.000]	12.70 [0.500]	0.71 [0.028]	0.89 [0.035]	0.79 [0.031]
1 1/4	31.75 [1.250]	15.87 [0.625]	0.76 [0.030]	0.94 [0.037]	0.84 [0.033]
1 1/2	38.10 [1.500]	19.05 [0.750]	0.86 [0.034]	1.04 [0.041]	0.94 [0.037]
2	50.80 [2.000]	25.40 [1.000]	0.94 [0.037]	1.12 [0.044]	1.02 [0.040]

Ordering Information

Color	Black (-0) only
Size selection	Always order the largest size that will shrink snugly over the component to be covered. Special order sizes are available upon request and are subject to a minimum purchase.
Standard packaging	On spools. Quantity varies by size.
Ordering description	Specify product name, size and color (for example, RT-790-1/8-0-SP).

Part Numbering

RT-790	- 1/8	-0	-SP
Material	Size	Color	Package

Catalog 1654025
Revised 3-13

www.te.com

Dimensions are shown for reference purposes only. Specifications subject to change.

Dimensions are in millimeters unless otherwise specified.

USA: +1 800 522 6752
Asia Pacific: +86 0 400 820 6015
UK: +44 800 267 666

For additional support numbers please visit www.te.com

RW-175

High-temperature, Chemical-Resistant, Polyvinylidene Fluoride Tubing

Product Facts

- 2:1 shrink ratio
- Tough, semirigid, very-thin-wall insulation
- High flame-resistance, meeting the requirements of AMS-DTL-23053*, Test C, with UL and CSA VW-1 rating
- High-temperature performance that meets or exceeds military and industrial standards
- Protection from most industrial solvents, fuels, and chemicals
- Recommended maximum temperature for use as a primary insulator: 135°C [275°F]
- RoHS compliant

Applications

Especially suitable for applications requiring high-temperature performance, outstanding abrasion resistance and cut-through resistance, or superior chemical and solvent properties. Provides electrical insulation and strain relief of multipin connectors and solder joints. Well-suited for applications that require dense packing of components or visual inspection of covered components.

Installation

Minimum shrink temperature: 155°C [311°F]

Minimum full recovery temperature: 175°C [347°F]

Operating Temperature Range

-55°C to 175°C
[-67°F to 347°F]

Specifications/Approvals

Series	UL	CSA	Military	Industry	TE
RW-175	E35586 VW-1 600 V, 150°C	LR31929 VW-1 600 V, 150°C	AMS-DTL-23053/8* Def. Stan. 59-97 Type 3 VG 95343 Pt 5 Type F BS 3G 198 Pt4	VDE 0341 Pt 9005	RW-3029/1 RW-3029/2

*Formerly MIL-I-23053 and MIL-DTL-23053/8.

Available in:	Americas	Europe	Asia Pacific
	■	■	■

Catalog 1654025
Revised 3-13

www.te.com

Dimensions are shown for reference purposes only. Specifications subject to change.

Dimensions are in millimeters unless otherwise specified.

USA: +1 800 522 6752
Asia Pacific: +86 0 400 820 6015
UK: +44 800 267 666

For additional support numbers please visit www.te.com

RW-175 (Continued)

Product Dimensions

Size	Inside Diameter		Recovered Wall Thickness**
	Minimum Expanded as Supplied	Maximum Recovered After Heating	After Heating
3/64	1.2 [0.046]	0.6 [0.023]	0.25 ± 0.05 [0.010 ± 0.002]
1/16	1.6 [0.063]	0.8 [0.031]	0.25 ± 0.05 [0.010 ± 0.002]
3/32	2.4 [0.093]	1.2 [0.046]	0.25 ± 0.05 [0.010 ± 0.002]
1/8	3.2 [0.125]	1.6 [0.062]	0.25 ± 0.05 [0.010 ± 0.002]
3/16	4.8 [0.187]	2.4 [0.093]	0.25 ± 0.05 [0.010 ± 0.002]
1/4	6.4 [0.250]	3.2 [0.125]	0.33 ± 0.05 [0.013 ± 0.002]
3/8	9.5 [0.375]	4.8 [0.187]	0.33 ± 0.05 [0.013 ± 0.002]
1/2	12.7 [0.500]	6.4 [0.250]	0.33 ± 0.05 [0.013 ± 0.002]
3/4	19.1 [0.750]	9.5 [0.375]	0.43 ± 0.08 [0.017 ± 0.003]
1	25.4 [1.000]	12.7 [0.500]	0.48 ± 0.08 [0.019 ± 0.003]
1 1/2	38.1 [1.500]	19.1 [0.750]	0.51 ± 0.08 [0.020 ± 0.003]

**Wall thickness will be less if tubing recovery is restricted during shrinkage.

Ordering Information

Color	Standard	Clear (-X)
	Nonstandard	Black (-0)
Size selection	Always order the largest size that will shrink snugly over the component to be covered. Special order sizes are available upon request.	
Standard packaging	In 1.2-meter [4-foot] lengths.	
Ordering description***	Specify product name, size and color (for example, RW-175 3/64-X).	

***Europe only. For supply to MIL spec., Def Stan and BS add -MS, -DS or -BS to ordering description.

Catalog 1654025
Revised 3-13

www.te.com

Dimensions are shown for reference purposes only. Specifications subject to change.

Dimensions are in millimeters unless otherwise specified.

USA: +1 800 522 6752
Asia Pacific: +86 0 400 820 6015
UK: +44 800 267 666

For additional support numbers please visit www.te.com

RW-200/RW-200E

Heat-Shrinkable, Chemical-Resistant, High-Temperature Tubing

Product Facts

- **High resistance to impact and abrasion**
- **Resistance to a wide variety of fuels, lubricants, acids, and solvents at elevated temperatures**
- **Flexibility at low temperatures without cracking**
- **RoHS compliant**

Applications

Raychem brand premium heat-shrinkable tubing is fabricated from modified, crosslinked fluroelastomeric materials designed for a wide range of applications. It is available in two configurations. RW-200-E is the heavy wall version. RW-200 meets the requirements of 23053/13.

Offering fluid resistance, RW-200 tubing can be used in applications up to 200°C [392°F].

Installation

Minimum shrink temperature: 100°C [212°F]

Minimum full recovery temperature: 175°C [347°F]

Operating Temperature Range

RW-200: -40°C* to 200°C [-40°F to 392°F]

RW-200-E: -55°C to 200°C [-67°F to 392°F]

Specifications/Approvals

Series	Military	TE
RW-200	AMS-DTL 23053/13*	RW-3037
RW-200-E	Def. Stan. 59-97 Issue 3 Type 4A VG 95343 Part 5 Type E VDE 0341/Pt9005 BS 4G-198 Part 3 12A	RW-3037

*Formerly MIL-I-23053/13 and MIL-DTL-23053/13.

Available in:	Americas	Europe	Asia Pacific
	■	■	■

Catalog 1654025
Revised 3-13

www.te.com

Dimensions are shown for reference purposes only. Specifications subject to change.

Dimensions are in millimeters unless otherwise specified.

USA: +1 800 522 6752
Asia Pacific: +86 0 400 820 6015
UK: +44 800 267 666

For additional support numbers please visit www.te.com

RW-200/RW-200E (Continued)

Product Dimensions

MIL Spec No.	Size	Inside Diameter: Minimum Expanded as Supplied	Inside Diameter: Maximum Recovered After Heating	Recovered Wall Thickness** After Heating (Nominal): RW-200-E	Recovered Wall Thickness** After Heating (Nominal): RW-200
-012	1/8	3.2 [0.125]	1.6 [0.062]	0.76 [0.030]	0.76 [0.030]
-001	3/16	4.8 [0.187]	2.4 [0.093]	0.84 [0.033]	0.89 [0.035]
-002	1/4	6.4 [0.250]	3.2 [0.125]	0.89 [0.035]	0.89 [0.035]
-003	3/8	9.5 [0.375]	4.8 [0.187]	1.02 [0.040]	0.89 [0.035]
-004	1/2	12.7 [0.500]	6.4 [0.250]	1.22 [0.048]	0.89 [0.035]
-005	5/8	15.9 [0.625]	7.9 [0.312]	—	1.07 [0.042]
-006	3/4	19.1 [0.750]	9.5 [0.375]	1.45 [0.057]	1.07 [0.042]
-007	7/8	22.2 [0.875]	11.1 [0.437]	—	1.25 [0.049]
-008	1	25.4 [1.000]	12.7 [0.500]	1.78 [0.070]	1.25 [0.049]
-009	1 1/4	31.8 [1.250]	15.9 [0.625]	—	1.40 [0.055]
-010	1 1/2	38.1 [1.500]	19.1 [0.750]	2.41 [0.095]	1.40 [0.055]
-011	2	50.8 [2.000]	25.4 [1.000]	2.79 [0.110]	1.65 [0.065]

**Wall thickness will be less if tubing recovery is restricted during shrinkage.

Ordering Information

Color	Standard Black (-0)
Size selection	Always order the largest size that will shrink snugly over the component to be covered. Special order sizes are available upon request.
Standard packaging	On spools.
Ordering description***	Specify product name, size and color (for example, RW-200 1/4-0-SP).

***Europe only. For supply to MIL, Def Stan and BS add -MS, -DS or -BS to ordering description.

Catalog 1654025
Revised 3-13

www.te.com

Dimensions are shown for reference purposes only. Specifications subject to change.

Dimensions are in millimeters unless otherwise specified.

USA: +1 800 522 6752
Asia Pacific: +86 0 400 820 6015
UK: +44 800 267 666

For additional support numbers please visit www.te.com

SCL

Semirigid, Encapsulant-Lined, Polyolefin Tubing

Product Facts

- 3:1 shrink ratio
- Splash-resistant, moisture-resistant covering; not intended for use where immersion in fluids is required
- Rugged protection against abrasion, vibration, and flexing
- Excellent strain relief and insulation of weak points
- RoHS compliant

Applications

Encapsulates components, splices, and terminations where moisture resistance and mechanical protection are required. Encapsulant melts and flows to fill surface irregularities of the substrate. While still hot, the tubing can be blocked to form a wire breakout.

Installation

Minimum shrink temperature: 125°C [257°F]

Minimum full recovery temperature: 135°C [275°F]

Operating Temperature Range

-55°C to 110°C
[-67°F to 230°F]

Specifications/Approvals

Series	UL	Military	TE
SCL	E85381 600 V, 125°C	AMS-DTL-23053/4*, Class 1	RT-1301

*Formerly MIL-I-23053/4 and MIL-DTL-23053/4.

Available in:	Americas	Europe	Asia Pacific
	■	■	■

Catalog 1654025
Revised 3-13

www.te.com

Dimensions are shown for reference purposes only. Specifications subject to change.

Dimensions are in millimeters unless otherwise specified.

USA: +1 800 522 6752
Asia Pacific: +86 0 400 820 6015
UK: +44 800 267 666

For additional support numbers please visit www.te.com

SCL (Continued)

Product Dimensions

Size	Additional Standard Color	Inside Diameter		Recovered Wall Thickness**	
		Minimum Expanded as Supplied	Maximum Recovered After Heating	Total Wall After Heating	Meltable Wall After Heating (Nominal)
1/8	Brown	3.2 [0.125]	0.6 [0.023]	0.96 ± 0.15 [0.038 ± 0.006]	0.51 [0.020]
3/16	Gray	4.8 [0.187]	1.5 [0.060]	1.09 ± 0.15 [0.043 ± 0.006]	0.64 [0.025]
1/4	White	6.4 [0.250]	2.0 [0.080]	1.19 ± 0.15 [0.047 ± 0.006]	0.69 [0.027]
3/8	Red	9.5 [0.375]	3.4 [0.135]	1.27 ± 0.18 [0.050 ± 0.007]	0.76 [0.030]
1/2	Blue	12.7 [0.500]	5.0 [0.195]	1.39 ± 0.18 [0.055 ± 0.007]	0.89 [0.035]
3/4	Yellow	19.1 [0.750]	8.0 [0.313]	1.65 ± 0.18 [0.065 ± 0.007]	1.02 [0.040]
1	N/A	25.4 [1.000]	10.2 [0.400]	1.90 ± 0.18 [0.075 ± 0.007]	1.02 [0.040]

**Wall thickness will be less if tubing recovery is restricted during shrinkage.

Ordering Information

Color	Standard	Black (-0) for all sizes, plus one additional color per size per Product Dimensions table.
Size selection	Always order the largest size that will shrink snugly over the component to be covered. Special order sizes are available upon request.	
Standard packaging	In 1.2-meter [4-foot] lengths.	
Ordering description***	Specify product name, size and color (for example, SCL 1/4-0).	

***Europe only. For supply to MIL spec., Def Stan and BS add -MS, -DS or -BS to ordering description.

Dimensions are shown for reference purposes only. Specifications subject to change.

Dimensions are in millimeters unless otherwise specified.

USA: +1 800 522 6752
Asia Pacific: +86 0 400 820 6015
UK: +44 800 267 666

For additional support numbers please visit www.te.com

SCT

Flame-Retardant, Adhesive-Lined, Semirigid Polyolefin Tubing (Extended Temperature Range)

Product Facts

- **4:1 shrink ratio allows a few sizes to cover a wide range of splice and component diameters**
- **Flame-retardant and mechanically tough, the tubing provides strain relief and abrasion protection of wire splices, terminals, and other components**
- **Thick adhesive liner forms an effective barrier against fluids and moisture and performs well at an extended temperature range**
- **RoHS compliant**

Applications

Specially designed to insulate and seal automotive wire splices and components in an under-the-hood automotive environment. Specially formulated to function at an extended temperature range.

Installation

Minimum shrink temperature: 110°C [230°F]

Minimum full recovery temperature: 135°C [266°F]

Operating Temperature Range

-40°C to 150°C
[-40°F to 302°F]

Specifications/Approvals

Series	TE
SCT	SCT SCD

Available in:	Americas	Europe	Asia Pacific
	■	■	■

Catalog 1654025
Revised 3-13

www.te.com

Dimensions are shown for reference purposes only. Specifications subject to change.

Dimensions are in millimeters unless otherwise specified.

USA: +1 800 522 6752
Asia Pacific: +86 0 400 820 6015
UK: +44 800 267 666

For additional support numbers please visit www.te.com

SCT (Continued)

Product Dimensions

Part Number	Inside Diameter		Recovered Wall Thickness*	
	Minimum Expanded as Supplied	Maximum Recovered After Heating	Total Wall After Heating	Meltable Wall After Heating (Nominal)
SCT No. 1	7.6 [0.300]	1.7 [0.065]	1.52 ± 0.30 [0.060 ± 0 .012]	0.76 [0.030]
SCT No. 2	9.0 [0.355]	2.3 [0.090]	1.52 ± 0.30 [0.060 ± 0 .012]	0.76 [0.030]
SCT No. 3	11.6 [0.455]	2.5 [0.100]	2.29 ± 0.30 [0.090 ± 0.012]	1.40 [0.055]
SCT No. 4	17.8 [0.700]	4.4 [0.175]	2.54 ± 0.30 [0.100 ± 0.012]	1.52 [0.060]

*Wall thickness will be less if tubing recovery is restricted during shrinkage.

Ordering Information

Color	Black
Size selection	Always order the largest size that will shrink snugly over the component being covered. Special order sizes are available upon request.
Standard packaging	Cut pieces.
Marking	Tubing will be printed with its numbered size (such as SCT-1, SCT-2, SCT-3, SCT-4).
Ordering description	Specify product name, numbered size, color and cut length (for example, SCT-NO.3-0-75MM).

SFR

Very Flexible, Flame-Retardant, Silicone Elastomer Tubing

Product Facts

- Outstanding low-temperature flexibility
- Resistance to hydraulic fluids, fuel, and lubricating oil
- Very good ablative characteristics: when exposed to flame, surface turns to insulative char or "ablates"
- RoHS compliant

Applications

Provides cable jacketing, harness protection, and strain relief for electronic components, semi-conductor leads, and wire splices. Suitable for applications that require flexibility over a wide range of operating temperatures.

Installation

Minimum shrink temperature: 135°C [285°F]

Minimum full recovery temperature: 175°C [347°F]

Operating Temperature Range

-75°C to 180°C
[-103°F to 356°F]

Specifications/Approvals

Series	Military	TE
SFR	AMS-DTL-23053/10*	RT-1140

*Formerly MIL-I-23053/10 and MIL-DTL-23053/10.

Available in:	Americas	Europe	Asia Pacific
	■	■	■

Catalog 1654025
Revised 3-13

www.te.com

Dimensions are shown for reference purposes only. Specifications subject to change.

Dimensions are in millimeters unless otherwise specified.

USA: +1 800 522 6752
Asia Pacific: +86 0 400 820 6015
UK: +44 800 267 666

For additional support numbers please visit www.te.com

SFR (Continued)

Product Dimensions

Size	Inside Diameter		Recovered Wall Thickness**
	Minimum Expanded as Supplied	Maximum Recovered After Heating	After Heating
1/4	6.4 [0.250]	3.6 [0.143]	0.88 ± 0.25 [0.035 ± 0.010]
3/8	9.5 [0.375]	5.4 [0.214]	1.02 ± 0.25 [0.040 ± 0.010]
1/2	12.7 [0.500]	7.3 [0.286]	1.21 ± 0.38 [0.048 ± 0.015]
5/8	15.9 [0.625]	9.1 [0.357]	1.32 ± 0.38 [0.052 ± 0.015]
3/4	19.1 [0.750]	10.9 [0.428]	1.44 ± 0.38 [0.057 ± 0.015]
7/8	22.2 [0.875]	12.7 [0.500]	1.65 ± 0.38 [0.065 ± 0.015]
1	25.4 [1.000]	14.5 [0.570]	1.77 ± 0.51 [0.070 ± 0.020]
1 1/4	31.8 [1.250]	18.1 [0.714]	2.21 ± 0.51 [0.087 ± 0.020]
1 1/2	38.1 [1.500]	21.8 [0.857]	2.41 ± 0.51 [0.095 ± 0.020]
1 3/4	44.5 [1.750]	25.4 [1.000]	2.71 ± 0.51 [0.107 ± 0.020]
2	50.8 [2.000]	29.0 [1.140]	2.79 ± 0.51 [0.110 ± 0.020]

**Wall thickness will be less if tubing recovery is restricted during shrinkage.

Ordering Information

Color	Standard	Black (-0)
Size selection	Always order the largest size that will shrink snugly over the component to be covered. Special order sizes are available upon request.	
Standard packaging	On spools.	
Ordering description***	Specify product name, size and color (for example, SFR 1/4-0-SP).	

***Europe only. For supply to MIL spec., Def Stan and BS add -MS, -DS or -BS to ordering description.

Catalog 1654025
Revised 3-13

www.te.com

Dimensions are shown for reference purposes only. Specifications subject to change.

Dimensions are in millimeters unless otherwise specified.

USA: +1 800 522 6752
Asia Pacific: +86 0 400 820 6015
UK: +44 800 267 666

For additional support numbers please visit www.te.com

SRFR

Highly Flexible, Silicone Rubber Tubing

Product Facts

- **Highly flame-retardant**
- **Extremely flexible at high and low temperatures**
- **Shrink ratio 1.5:1 minimum except sizes 4/2.9 and 29/20**
- **RoHS compliant**

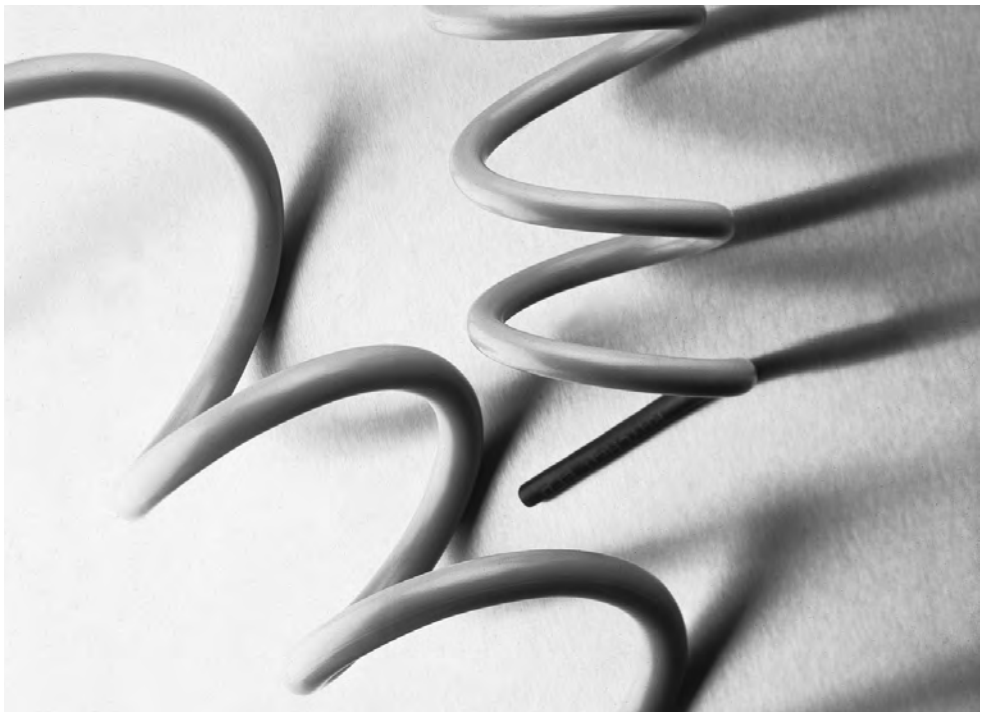

Applications

Highly flexible and resistant to high and low temperatures. Unlike other silicone materials, SRFR displays outstanding physical strength. It resists extreme heat shocks, and exhibits good thermal insulation. SRFR is non-burning and has outstanding ablative properties as well as excellent physical and electrical properties. SRFR is used in medical equipment where its key properties are outstanding flexibility and ability to withstand exposure to sterilization conditions. Other applications include thyristor power cable insulation, heating element and bus bar insulation, fiber optic bundle sheathing, and rocketry support cable protection.

Installation

Minimum shrink temperature: 135°C [275°F]

Minimum full recovery temperature: 175°C [347°F]

Operating Temperature Range

-75°C to 200°C
[-103°F to 392°F]

Specifications/Approvals

Series	UL	TE
SRFR	E85381 VW-1 600V, 200°C	RW-2057

Available in:	Americas	Europe	Asia Pacific
	■	■	■

Catalog 1654025
Revised 3-13

www.te.com

Dimensions are shown for reference purposes only. Specifications subject to change.

Dimensions are in millimeters unless otherwise specified.

USA: +1 800 522 6752
Asia Pacific: +86 0 400 820 6015
UK: +44 800 267 666

For additional support numbers please visit www.te.com

SRFR (Continued)

Product Dimensions

Size	Inside Diameter		Recovered Wall Thickness*
	Minimum Expanded as Supplied	Maximum Recovered After Heating	After Heating
2.9/1.7	2.9 [0.114]	1.7 [0.067]	1.0 ± 0.50 [0.039 ± 0.020]
4/2.9	4.0 [0.158]	2.9 [0.114]	1.0 ± 0.50 [0.039 ± 0.020]
7.8/4.6	7.8 [0.307]	4.6 [0.181]	1.0 ± 0.50 [0.039 ± 0.020]
10/6.5	10.0 [0.394]	6.5 [0.256]	1.5 ± 0.50 [0.059 ± 0.020]
15/9.6	15.0 [0.591]	9.6 [0.378]	1.5 ± 0.50 [0.059 ± 0.020]
21/13	21.0 [0.827]	13.0 [0.512]	2.0 ± 0.75 [0.079 ± 0.030]
29/20	29.0 [1.142]	20.0 [0.787]	2.0 ± 0.75 [0.079 ± 0.030]
41/27	41.0 [1.614]	27.0 [1.063]	3.0 ± 1.00 [0.118 ± 0.039]
51/33	51.0 [2.008]	33.0 [1.299]	3.0 ± 1.00 [0.118 ± 0.039]

*Wall thickness will be less if tubing recovery is restricted during shrinkage.

Ordering Information

Color	Standard	Gray (-8)
Size selection	Always order the largest size that will shrink snugly over the component to be covered.	
Standard packaging	On spools.	
Ordering description	Specify product name, size and color (for example, SRFR 2.9/1.7-8-SP).	

Catalog 1654025
Revised 3-13

www.te.com

Dimensions are shown for reference purposes only. Specifications subject to change.

Dimensions are in millimeters unless otherwise specified.

USA: +1 800 522 6752
Asia Pacific: +86 0 400 820 6015
UK: +44 800 267 666

For additional support numbers please visit www.te.com

SST/SST-FR

Self-Sealing, Heat-Shrinkable Tubing

Product Facts

- Thick adhesive liner forms an effective barrier against fluids and moisture
- Thick-wall insulation, strain relief and abrasion protection
- No need for greases, tape, or epoxy
- Expansion ratios as high as 3:1
- Available in flame-retardant material
- SST has the following agency approvals:
  - ABS (American Bureau of Shipping)
  - Lloyd's (Lloyd's Register of Shipping)
- RoHS compliant

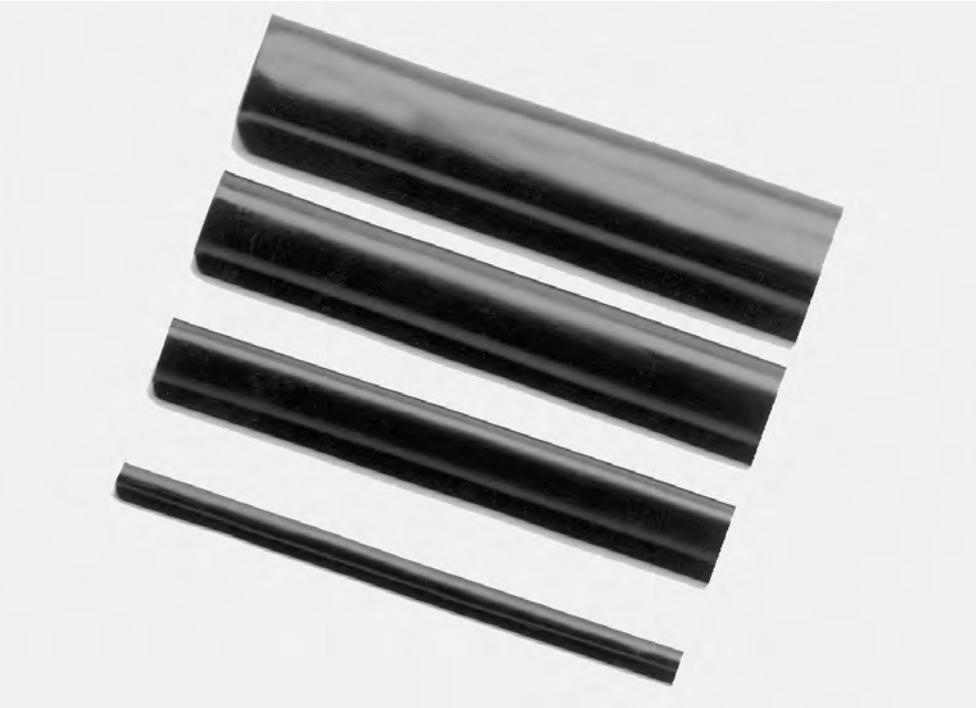

Applications

SST provides a simple, positive splice-sealing method that offers protection under adverse environmental conditions. Tubing supplied with standard sealant provides water sealing and environmental protection in wet or underground applications. The thermoplastic adhesive not only seals, but also provides mechanical strain relief. The polymer tubing has excellent insulating, abrasion-resistance, and strain-relief properties.

Installation

Minimum shrink temperature: 90°C [195°F]

Minimum full recovery temperature: 121°C [250°F]

Operating Temperature Range

-55°C to 110°C
[-67°F to 230°F]

Specifications/Approvals

Series	Military	Industry	Agency	TE
SST	—	—		RW-2011
SST-FR	AMS-DTL-23053/15*, Classes 1 and 2	ASTM D 685, nonburning	ABS, Lloyd's	RW-2011

*Formerly MIL-I-23053/I5 and MIL-DTL-23053/15.

Available in:	Americas	Europe	Asia Pacific
	■	■	■

Catalog 1654025
Revised 3-13

www.te.com

Dimensions are shown for reference purposes only. Specifications subject to change.

Dimensions are in millimeters unless otherwise specified.

USA: +1 800 522 6752
Asia Pacific: +86 0 400 820 6015
UK: +44 800 267 666

For additional support numbers please visit www.te.com

SST/SST-FR (Continued)

Product Dimensions

Size†	Standard Nominal Length	Inside Diameter: Minimum Expanded as Supplied	Inside Diameter: Maximum Recovered After Heating	Wall Thickness: Expanded	Wall Thickness: Nominal Wall After Heating††	Recommended Cable Range for 600-Volt Cable
SST*-03	30**, 48	0.300	0.100	0.025	0.070	18 through 14 AWG
SST*-04	30**, 48	0.400	0.150	0.025	0.070	14 through 10 AWG
SST*-07	48	0.750	0.220	0.030	0.095	8 through 1 AWG
SST*-11	48	1.100	0.375	0.040	0.120	2 through 4/0 AWG
SST*-13	48	1.300	0.375	0.035	0.120	2 through 4/0 AWG
SST*-15	48	1.500	0.500	0.050	0.140	2/0 AWG through 500 MCM
SST*-17	48	1.700	0.500	0.045	0.140	2/0 AWG through 500 MCM
SST*-20	48	2.000	0.750	0.050	0.160	350 MCM through 1000 MCM
SST*-27	48	2.700	0.900	0.050	0.160	500 MCM through 1250 MCM
SST*-30	48	3.000	1.250	0.050	0.160	900 MCM through 1500 MCM
SST*-40	48	4.000	1.750	0.050	0.160	1500 MCM through 2500 MCM
SST*-45	48	4.500	1.750	0.050	0.160	1500 MCM through 2500 MCM

†In place of asterisk* substitute length of tubing to be ordered. For example, SST*-11, as the second column indicates, comes in 48-inch lengths, so a 48-inch cut piece of SST tubing would be SST 48-11.
††Wall thickness will be less if tubing recovery is restricted during shrinkage.
**30-inch length standard for /226 coating only.

Ordering Information

Color	Standard	Black
	Nonstandard	White, Red, Yellow and Clear (Clear is non-flame-retardant)
Size selection	Always order the largest size that will shrink snugly over the component to be covered. Special order sizes are available upon request.	
Standard packaging	See Product Dimensions table.	
Ordering description	Specify product name, cut length, size and color (for example, SST 48-07/FR/97).	

Part Numbering System

SST - _ - _ / _ / _ / _ / _

- **"NM"** - no marking
- **Color**
  Black/leave blank (standard)
  White/WHT
  Red/RED
  Yellow/YLW
  Clear/CL (non-flame retardant)
- **Adhesive/sealant**
  /97 standard with FR
  /226 standard with Non FR
- **"FR"** - flame-retardant
- **Size**
- **Length** in inches (48 inch max)
- **Family**

Example: SST-48-07/FR/97/NM

Catalog 1654025
Revised 3-13

www.te.com

Dimensions are shown for reference purposes only. Specifications subject to change.

Dimensions are in millimeters unless otherwise specified.

USA: +1 800 522 6752
Asia Pacific: +86 0 400 820 6015
UK: +44 800 267 666

For additional support numbers please visit www.te.com

TAT-125

Adhesive-Lined, Flexible, Polyolefin Tubing

Product Facts

- 2:1 shrink ratio
- Thin adhesive lining that bonds to outer tubing and surface below, forming a positive environmental seal
- Flexibility of both tubing and adhesive
- Moisture seal that is resistant to bending of the substrate
- Good mechanical strength and cut-through resistance
- Adhesive that bonds to a wide variety of plastics, rubbers, and metals, including polyethylene, neoprene, lead, and steel
- RoHS compliant

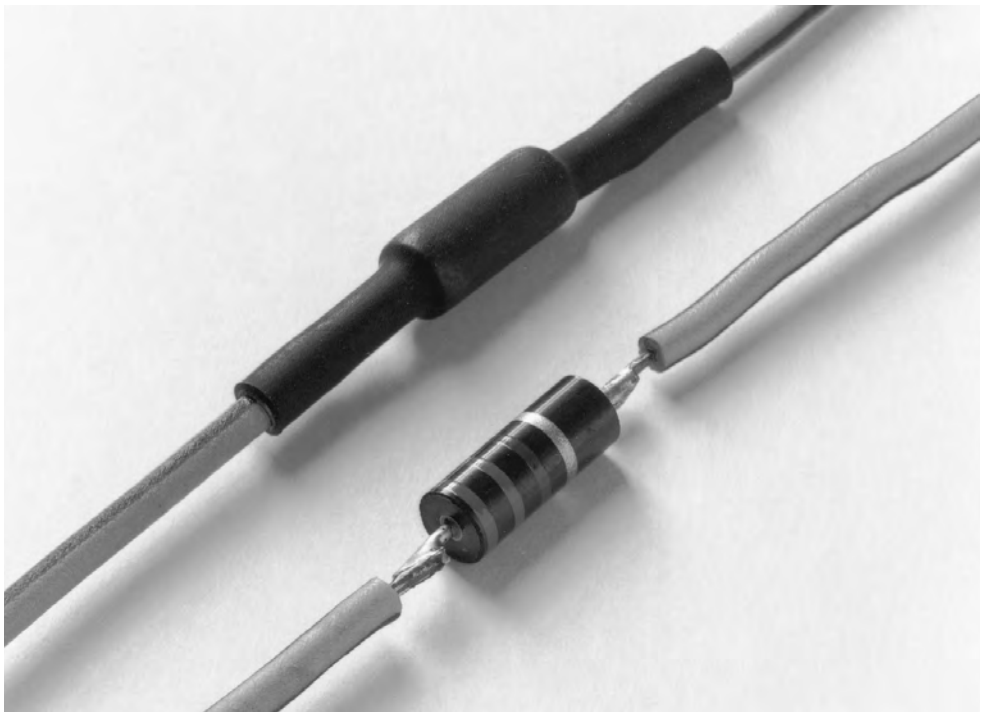

Applications

Seals and protects simple in-line splices, bimetallic joints, and components from fluids, moisture, and corrosion. Repairs damaged wire insulation, especially where flexibility is required. Provides one-step electrical insulation and moisture sealing.

Installation

Minimum shrink temperature: 95°C [203°F]

Minimum full recovery temperature: 121°C [250°F]

Operating Temperature Range

-55°C to 110°C
[-67°F to 230°F]

Specifications/Approvals

Series	UL*	Military	TE
TAT-125 Type 1 (colors)	E85381 600 V, 125°C	AMS-DTL-23053/4*, Class 2	RW-3032
TAT-125 Type 2 (clear)	—	—	RW-3032

*Formerly MIL-I-23053/4 and MIL-DTL-23053/4. Sizes 1/4" through 1 1/2" only.

Available in:	Americas	Europe	Asia Pacific
	■		■

Catalog 1654025
Revised 3-13

www.te.com

Dimensions are shown for reference purposes only. Specifications subject to change.

Dimensions are in millimeters unless otherwise specified.

USA: +1 800 522 6752
Asia Pacific: +86 0 400 820 6015
UK: +44 800 267 666

For additional support numbers please visit www.te.com

TAT-125 (Continued)

Product Dimensions

Size	Inside Diameter		Recovered Wall Thickness**	
	Minimum Expanded as Supplied	Maximum Recovered After Heating	Total Wall After Heating (Nominal)	Adhesive Wall After Heating (Nominal)
1/8	3.2 [0.125]	1.6 [0.062]	0.69 [0.027]	0.23 [0.009]
3/16	4.8 [0.187]	2.4 [0.093]	0.71 [0.028]	0.25 [0.010]
1/4	6.4 [0.250]	3.2 [0.125]	0.74 [0.029]	0.13 [0.005]
3/8	9.5 [0.375]	4.8 [0.187]	0.74 [0.029]	0.13 [0.005]
1/2	12.7 [0.500]	6.4 [0.250]	0.76 [0.030]	0.15 [0.006]
3/4	19.1 [0.750]	9.5 [0.375]	0.89 [0.035]	0.15 [0.006]
1	25.4 [1.000]	12.7 [0.500]	1.07 [0.042]	0.20 [0.008]
1 1/2	38.1 [1.500]	19.1 [0.750]	1.19 [0.047]	0.28 [0.011]

**Wall thickness will be less if tubing recovery is restricted during shrinkage.

Ordering Information

Color	Standard	Black (-0)
	Nonstandard	White (-9), red (-2), blue (-6), yellow (-4), green (-5), brown (-1), orange (-3), violet (-7), gray (-8), clear (-X , not flame-retardant)
Size selection	Always order the largest size that will shrink snugly over the component to be covered. Special order sizes are available upon request.	
Standard packaging	In 1.2-meter [4-foot] lengths.	
Ordering description	Specify product name, size and color (for example, TAT-125 1/4-0).	

Catalog 1654025
Revised 3-13

www.te.com

Dimensions are shown for reference purposes only. Specifications subject to change.

Dimensions are in millimeters unless otherwise specified.

USA: +1 800 522 6752
Asia Pacific: +86 0 400 820 6015
UK: +44 800 267 666

For additional support numbers please visit www.te.com

TC Caps

Semirigid, Flame-Retardant Polyolefin Caps

Product Facts

- 2.5:1 shrink ratio
- Flame-retardant
- Permanent or temporary method to terminate wires
- Rapid, simple installation
- Rugged protection against abrasion, vibration, and flexing
- RoHS compliant

Applications

Widely used for wire terminations because of their light weight, small size and durability. Vibration-proof caps are used to insulate and terminate dead-end electrical cables, fixtures, connectors, and other electrical equipment. Also used to protect the ends of wire during storage.

Installation

Minimum shrink temperature: 110°C [230°F]

Minimum full recovery temperature: 135°C [275°F]

Operating Temperature Range

-55°C to 135°C
[-67°F to 275°F]

Specifications/Approvals

Series	UL	TE
TC Caps	E85381 600 V, 125°C	TC Caps SCD

Available in:	Americas	Europe	Asia Pacific
	■	■	■

Catalog 1654025
Revised 3-13

www.te.com

Dimensions are shown for reference purposes only. Specifications subject to change.

Dimensions are in millimeters unless otherwise specified.

USA: +1 800 522 6752
Asia Pacific: +86 0 400 820 6015
UK: +44 800 267 666

For additional support numbers please visit www.te.com

TC Caps (Continued)

Product Dimensions

Size	Color	Length		Inside Diameter		Recovered Wall Thickness** After Heating
		Nominal Overall as Supplied	Minimum Open Barrel after Recovery*	Minimum Expanded as Supplied	Maximum Recovered After Heating	
TC 4001	White (-9)	19.1 (0.750)	10.2 (0.400)	1.6 (0.063)	0.8 (0.030)	0.51 ± 0.12 (0.020 ± 0.005)
TC 4003	Red (-2)	25.4 (1.000)	14.0 (0.550)	3.2 (0.125)	1.3 (0.050)	0.64 ± 0.12 (0.025 ± 0.005)
TC 4005	Gray (-8)	28.6 (1.125)	14.0 (0.550)	6.4 (0.250)	2.5 (0.100)	0.69 ± 0.12 (0.027 ± 0.005)

*See glossary for definition of “barrel”.
**Wall thickness will be less if tubing recovery is restricted during shrinkage.

Ordering Information

Color	Standard	One color per size per the Product Dimensions table.
Size selection	Always order the largest size that will shrink snugly over the component to be covered.	
Standard packaging	In pieces.	
Ordering description	Specify product name, size and color (for example, TC-CAPS-4003-2).	

Catalog 1654025
Revised 3-13

www.te.com

Dimensions are shown for reference purposes only. Specifications subject to change.

Dimensions are in millimeters unless otherwise specified.

USA: +1 800 522 6752
Asia Pacific: +86 0 400 820 6015
UK: +44 800 267 666

For additional support numbers please visit www.te.com

TFE and TFE-R

High-Temperature, Chemically Inert, Modified Tubing made with PTFE® Fluoropolymer

Product Facts

- Shrink ratio: 1.8:1 (TFE)
  3.2:1 (TFE-R)
- High flame-resistance
- Excellent chemical resistance
- RoHS compliant

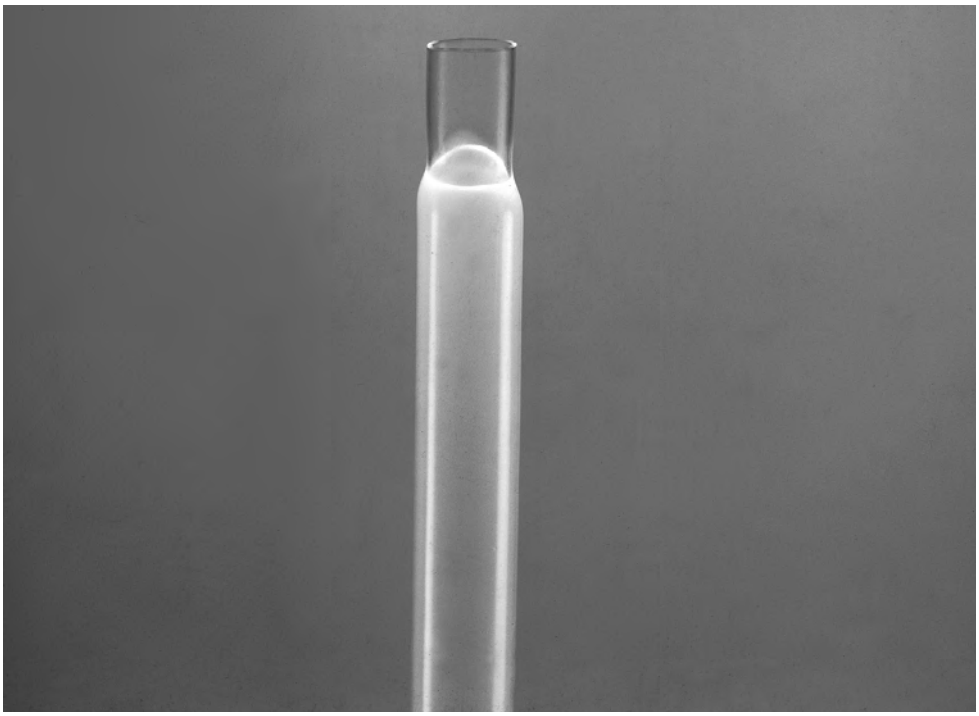

Applications

Designed to provide insulation and mechanical protection in severe chemical and thermal environments. Used to cover hydraulic hose and couplings to prevent contamination and corrosion. The high mechanical strength and extremely low coefficient of friction make it good for reducing damage to bearing shafts and similar applications.

Installation

Minimum shrink temperature: 330°C [625°F]

Minimum full recovery temperature: 340°C [644°F]

Operating Temperature Range

-67°C to 250°C
[-88.6°F to 482°F]

Specifications/Approvals

Series	Military	TE
TFE, TFE-R	AMS-DTL-23053/12*, Classes 3 and 5 Def. Stan. 59-97 Type 5A (TFE) Def. Stan. 59-97 Type 5B (TFE-R)	RW-2055 (TFE) RW-2054 (TFE-R)

*Formerly MIL-I-23053/12 and MIL-DTL-23053/12.

Available in:	Americas	Europe	Asia Pacific
		■	■

PTFE is a trademark of E. I. du Pont de Nemours and Company.

Catalog 1654025
Revised 3-13

www.te.com

Dimensions are shown for reference purposes only. Specifications subject to change.

Dimensions are in millimeters unless otherwise specified.

USA: +1 800 522 6752
Asia Pacific: +86 0 400 820 6015
UK: +44 800 267 666

For additional support numbers please visit www.te.com

TFE and TFE-R (Continued)

Product Dimensions

TFE

Size	Inside Diameter		Wall Thickness**
	Minimum Expanded as Supplied	Maximum Recovered After Heating	Nominal Recovered After Heating
30	0.8 [0.032]	0.38 [0.015]	0.23 [0.009]
28	0.9 [0.035]	0.46 [0.018]	0.23 [0.009]
26	1.1 [0.043]	0.56 [0.022]	0.25 [0.010]
24	1.2 [0.047]	0.68 [0.027]	0.25 [0.010]
22	1.4 [0.055]	0.81 [0.032]	0.30 [0.012]
20	1.5 [0.059]	0.99 [0.039]	0.30 [0.012]
18	1.9 [0.075]	1.24 [0.049]	0.30 [0.012]
16	2.3 [0.091]	1.55 [0.061]	0.30 [0.012]
14	3.0 [0.118]	1.83 [0.072]	0.30 [0.012]
12	3.8 [0.150]	2.26 [0.089]	0.30 [0.012]
10	4.8 [0.189]	2.84 [0.112]	0.30 [0.012]
8	6.1 [0.240]	3.58 [0.141]	0.38 [0.015]
6	7.6 [0.299]	4.52 [0.178]	0.38 [0.015]
4	9.4 [0.370]	5.69 [0.224]	0.38 [0.015]
2	10.9 [0.429]	7.06 [0.278]	0.38 [0.015]
0	11.9 [0.469]	8.81 [0.347]	0.38 [0.015]

**Wall thickness will be less if tubing recovery is restricted during shrinkage.

TFE-R

Size	Inside Diameter		Wall Thickness**
	Minimum Expanded as Supplied	Maximum Recovered After Heating	Nominal Recovered After Heating
5/64	2.0 [0.079]	0.6 [0.024]	0.23 [0.009]
1/8	3.2 [0.126]	1.0 [0.039]	0.25 [0.010]
1/4	6.4 [0.252]	1.6 [0.063]	0.30 [0.012]
3/8	9.5 [0.374]	2.4 [0.095]	0.30 [0.012]
1/2	12.7 [0.500]	3.7 [0.146]	0.38 [0.015]
5/8	15.9 [0.626]	4.5 [0.177]	0.38 [0.015]
3/4	19.0 [0.748]	5.7 [0.224]	0.38 [0.015]
1	25.4 [1.000]	7.1 [0.230]	0.38 [0.015]
1-1/4	32.0 [1.260]	8.8 [0.347]	0.38 [0.015]

**Wall thickness will be less if tubing recovery is restricted during shrinkage.

Ordering Information

Color	Standard Clear (-X)
Size selection	Always order the largest size that will shrink snugly over the component to be covered. Special order sizes are available upon request.
Standard packaging	In 1.2-meter [4-foot] lengths.
Ordering description***	Specify product name, size and color (for example,TFE 22-X).

***Europe only. For supply to MIL spec., Def Stan and BS add -MS, -DS or -BS to ordering description.

Catalog 1654025
Revised 3-13

www.te.com

Dimensions are shown for reference purposes only. Specifications subject to change.

Dimensions are in millimeters unless otherwise specified.

USA: +1 800 522 6752
Asia Pacific: +86 0 400 820 6015
UK: +44 800 267 666

For additional support numbers please visit www.te.com

Tubing Kits and Mini-Spools

Smaller Packaging Options for Single Wall and Adhesive-Lined Tubing Products

Product Facts

- **VERSAFIT and RNF-100 tubing: 2:1 shrink ratio**
- **DWP-125: 3:1 shrink ratio**
- **ES1000: 4:1 shrink ratio**
- **VERSAFIT tubing's low full recovery temperature reduces installation time and the risk of damage to temperature-sensitive components**
- **RNF-100 offers excellent physical, chemical, and electrical properties that meet or exceed commercial, industrial and military standards for highly reliable, general purpose tubing**
- **DWP-125 and ES1000 have high-shrink-ratios to allow for insulation and sealing of irregular shapes; few sizes cover a wide range of diameters**
- **RoHS compliant**

Applications

Single wall VERSAFIT and RNF-100 tubing provide electrical insulation and strain relief of in-line components, electrical connections, wire terminations, and splices. They can be used to bundle wires for flexible light duty harnesses. Also to identify or color code wires, cables, terminals and electronic components.

Adhesive-lined DWP-125 and ES1000 environmentally seal and protect a wide variety of electrical applications, including wire splices, terminations, break-outs and connector-to-cable transitions.

Installation

Minimum full recovery temperature:

VERSAFIT: 90°C [194°F]

RNF-100: 121°C [250°F]

DWP-125: 125°C [257°F]

ES1000: 135°C [275°F]

Operating Temperature Range

VERSAFIT and RNF-100:
-55°C to 135°C
[-67°F to 275°F]

DWP-125:
-40°C to 110°C
[-40°F to 230°F]

ES1000:
-40°C to 130°C
[-40°F to 266°F]

Specifications/Approvals

Series	UL	CSA	Military	TE
VERSAFIT	E35586 VW-1 600 V, 125°C	LR31929 VW-1 600 V, 125°C	AMS-DTL-23053/5*, Classes 1 & 3	RW-3009
RNF-100	E35586 600 V, 125°C	LR31929 600 V, 125°C	AMS-DTL-23053/5*, Class 1	RT-350
DWP-125	E35586 600 V, 125°C	—	—	DWP-125 SCD
ES1000	E85381 600 V, 125°C	—	—	RT-1113

*Formerly MIL-I-23053/5 and MIL-DTL-23053/5.

Available in:	Americas	Europe	Asia Pacific
	■		■

Catalog 1654025
Revised 3-13

www.te.com

Dimensions are shown for reference purposes only. Specifications subject to change.

Dimensions are in millimeters unless otherwise specified.

USA: +1 800 522 6752
Asia Pacific: +86 0 400 820 6015
UK: +44 800 267 666

For additional support numbers please visit www.te.com

Tubing Kits and Mini-Spools (Continued)

Single Wall Tubing

KIT 1 – 2 to 1 Shrink Ratio • Black • 600V, 125°C, UL/CSA VW-1

(KIT 1 PN: A55251-000)

Expanded I.D.	Quantity (6 Inch Pieces)	Fits Wire Gauge Size	Refill Part Number
VERSAFIT-3/16”	30	18 – 14 AWG	D76139-000
VERSAFIT-1/4”	28	12 – 10 AWG	F37063-000
VERSAFIT-3/8”	24	8 AWG	D27573-000
VERSAFIT-1/2”	20	6 –3 AWG	C02462-000
VERSAFIT-3/4”	14	2 – 1/0 AWG	A92664-000
VERSAFIT-1”	10	2/0 – 4/0 AWG	C21270-000

KIT 2 – 2 to 1 Shrink Ratio • 7 Colors • 600V, 125°C, UL/CSA VW-1 (except clear)**

(KIT 2 PN: D54859-000)

Expanded I.D.	Quantity (6 Inch Pieces)	Fits Wire Gauge Size	Refill Part Number
VERSAFIT-3/32”	35	18 AWG	E31091-000
VERSAFIT-1/8”	28	16 AWG	349256-000
VERSAFIT-3/16”	21	14 AWG	C53800-000
VERSAFIT-1/4”	21	12 – 10 AWG	C87605-000
VERSAFIT-3/8”	14	8 AWG	A82691-000
VERSAFIT-1/2”	14	6 – 3 AWG	E10896-000

Adhesive-Lined Tubing

KIT 3 – Black/White/Red/Clear • 600V, 125°C, UL (KIT 3 PN: E42160-000)

Expanded I.D.	Quantity (6 Inch Pieces)	Fits Wire Gauge Size		Refill Part Number
DWP-125-1/8”	25	20 – 16 AWG	(3 to 1 Shrink Ratio)	D14889-000
DWP-125-3/16”	25	14 –10 AWG	(3 to 1 Shrink Ratio)	E87367-000
DWP-125-1/4”	24	12 –10 AWG	(3 to 1 Shrink Ratio)	F91864-000
DWP-125-1/2”	10	6 –3 AWG	(3 to 1 Shrink Ratio)	F41454-000
DWP-125-3/4”	5	2 – 1/0 AWG	(3 to 1 Shrink Ratio)	C67617-000
DWP-125-1”	3	2/0 – 4/0 AWG	(3 to 1 Shrink Ratio)	F66623-000
ES1000-NO.1	6	16 – 12 AWG	(4 to 1 Shrink Ratio)	
ES1000-NO.2	5	12 – 10 AWG	(4 to 1 Shrink Ratio)	
ES1000-NO.3	5	10 – 8 AWG	(4 to 1 Shrink Ratio)	
ES1000-NO.4	3	6 –3 AWG	(4 to 1 Shrink Ratio)	

KITS 1, 2 and 3 are comprised of a durable six section plastic box with hinged lid. Inside the lid are product selection guidelines. Ask your Sales Representative about KIT 4 and KIT 6, our Economy Tubing Kits in a reclosable plastic bag, also used on “point of sale” racks. Here are Part Numbers for those Kits and their content:
KIT 4: E32151-000 (Three pieces each of 3/16”, 1/4”, 3/8”, 1/2”, 3/4” and 1” Black tubing in 6 inch pieces)
KIT 6: C72402-000 (Three pieces each of 3/64”, 1/16”, 3/32” and 1/8” Black tubing in 6 inch pieces)

VERSAFIT MINI-SPOOLS

2 to 1 Shrink Ratio • Black • 600V, 125°C, UL/CSA VW-1

Expanded I.D.	Quantity (Feet)	Part Number
VERSAFIT-3/64”	100	C16404-000
VERSAFIT-1/16”	75	E40870-000
VERSAFIT-3/32	65	D70981-000
VERSAFIT-1/8”	60	C17600-000
VERSAFIT-3/16”	50	F27135-000
VERSAFIT-1/4”	40	F64479-000
VERSAFIT-3/8”	35	D57591-000
VERSAFIT-1/2”	30	E37316-000
VERSAFIT-3/4”	25	449582-000
VERSAFIT-1”	15	F27156-000

VERSAFIT is a very flexible, highly flame-retardant polyolefin tubing, 90°C full recovery temperature, good fluid resistance with a UL 224/CSA VW-1 flammability rating.

RNF-100 MINI-SPOOLS

2 to 1 Shrink Ratio • Black • 600V, 125°C, UL/CSA

Expanded I.D.	Quantity (Feet)	Part Number
RNF-100-3/64”	100	D00409-000
RNF-100-1/16”	75	A66551-000
RNF-100-3/32	65	D42391-000
RNF-100-1/8”	60	F56629-000
RNF-100-3/16”	50	E77288-000
RNF-100-1/4”	40	F75818-000
RNF-100-3/8”	35	D12330-000
RNF-100-1/2”	30	A81736-000
RNF-100-3/4”	25	E40866-000
RNF-100-1”	15	E62131-000

RNF-100 is a flexible, flame-retardant polyolefin tubing, 121°C full recovery temperature, excellent fluid resistance with a UL 224/CSA All Tubing flammability rating.

Catalog 1654025
Revised 3-13

www.te.com

Dimensions are shown for reference purposes only. Specifications subject to change.

Dimensions are in millimeters unless otherwise specified.

USA: +1 800 522 6752
Asia Pacific: +86 0 400 820 6015
UK: +44 800 267 666

For additional support numbers please visit www.te.com

URHT

Ultra-High-Ratio, Flame-Retardant, Polyolefin Heat-Shrinkable Tubing

Product Facts

- Shrink ratios as high as 8:1
- Specially formulated for thick wall insulation, strain relief and abrasion protection
- Flame retardant passing ASTM D 635
- Excellent performance in both hot and cold environments
- Optional factory applied adhesive provides watertight environmental sealing in wet and corrosive locations
- RoHS compliant

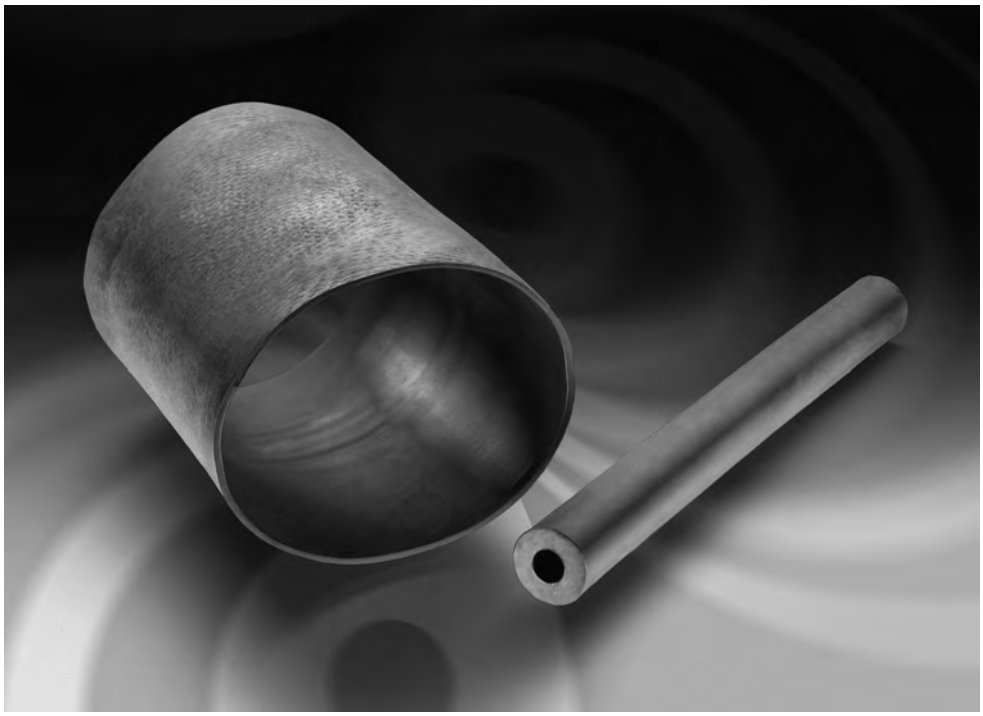

Applications

Ultra-high-shrink-ratio, heat-shrinkable tubing, with expansion ratios as high as 8-to-1, is designed to conform to odd shapes and shrink over large transitions, allowing for the repair and sealing of cable connectors and equipment. Cable harnesses can be repaired and released without disassembly. This product can be used to seal the back end of a connector or simply repair a damaged outer insulation of a cable or wire.

URHT tubing is available with or without a hot melt adhesive lining.

Installation

Minimum shrink temperature: 135°C [275°F]

Minimum full recovery temperature: 150°C [302°F]

Operating Temperature Range

-55°C to 135°C
[-67°F to 275°F]

Specifications/Approvals

Series	Military	TE
URHT	SAE-AS81765/1, Type II*	URHT SCD

*heat-shrinkable, crosslinked, flexible polyolefin

Available in:	Americas	Europe	Asia Pacific
	■	■	■

Catalog 1654025
Revised 3-13

www.te.com

Dimensions are shown for reference purposes only. Specifications subject to change.

Dimensions are in millimeters unless otherwise specified.

USA: +1 800 522 6752
Asia Pacific: +86 0 400 820 6015
UK: +44 800 267 666

For additional support numbers please visit www.te.com

URHT (Continued)

Product Dimensions

Size	Inside Diameter		Wall Thickness	
	Minimum Expanded as Supplied	Maximum Recovered After Heating	Nominal Recovered After Heating	Unrestricted Full Recovered Length ± 6.35 (.250)
URHT-200	50.80 (2.000)	5.84 (0.230)	3.56 (0.140)	7.62, 101.60, 152.40, 254.00 (3, 4, 6, 10)
URHT-300	76.20 (3.000)	8.64 (0.340)	3.56 (0.140)	7.62, 101.60, 152.40, 254.00 (3, 4, 6, 10)

Ordering Information

Color	Standard	Black (-0)
Size selection	Always order the largest size that will shrink snugly over the component to be covered.	
Standard packaging	In pieces.	
Ordering description	Specify product name, size, cut length and color (for example, URHT-200-10-0).	

Part Numbering System

URHT - _ / _ / _

- 42 = Std Adhesive
  86 = High Performance Adhesive
- Unrestricted recovered length
- Expanded inside diameter - as supplied

Catalog 1654025
Revised 3-13

www.te.com

Dimensions are shown for reference purposes only. Specifications subject to change.

Dimensions are in millimeters unless otherwise specified.

USA: +1 800 522 6752
Asia Pacific: +86 0 400 820 6015
UK: +44 800 267 666

For additional support numbers please visit www.te.com

Versafit

Highly Flame-Retardant, Very Flexible, Low-Shrink-Temperature, Polyolefin Tubing

Product Facts

- 2:1 shrink ratio
- Low shrink temperature reduces installation time and the risk of damage to temperature-sensitive components
- Very flexible; doesn't easily wrinkle when bent
- Highly flame-retardant
- Hot stamps extremely well
- Higher temperature rating, better thermal stability, and higher resistance to physical abuse than noncrosslinked materials
- Free of polybrominated biphenyls (PBBs) and polybrominated biphenyl oxides and ethers (PBBOs and PBBEs), which are classified as environmentally hazardous substances
- RoHS compliant

Applications

Cost-effective choice for many commercial and military applications; electrically insulates and protects in-line components, disconnect terminals, and splices. Bundles wires for very flexible light-duty harnesses. Strain-relieves electrical wire connections for commercial applications. Identifies or color-codes wires, cables, terminals, and components.

Installation

Minimum shrink temperature: 70°C [158°F]

Minimum full recovery temperature: 90°C [194°F]

Operating Temperature Range

-55°C to 135°C
[-67°F to 275°F]

Specifications/Approvals

Series	UL	CSA	Military	TE
Versafit	E35586 VW-1 600 V, 125°C	LR31929 VW-1 600 V, 125°C	AMS-DTL-23053/5* Classes 1 & 3	RW-3009

*Formerly MIL-I-23053/5 and MIL-DTL-23053/5.

Available in:	Americas	Europe	Asia Pacific
	■	■	■

Catalog 1654025
Revised 3-13

www.te.com

Dimensions are shown for reference purposes only. Specifications subject to change.

Dimensions are in millimeters unless otherwise specified.

USA: +1 800 522 6752
Asia Pacific: +86 0 400 820 6015
UK: +44 800 267 666

For additional support numbers please visit www.te.com

Versafit (Continued)

Product Dimensions

Size	Inside Diameter		Recovered Wall Thickness**
	Expanded as Supplied	Maximum Recovered After Heating	After Heating
3/64	1.63 ± 0.2 [0.064 ± 0.008]	0.6 [0.023]	0.40 ± 0.08 [0.016 ± 0.003]
1/16	1.85 ± 0.2 [0.073 ± 0.008]	0.8 [0.031]	0.43 ± 0.08 [0.017 ± 0.003]
3/32	2.79 ± 0.2 [0.110 ± 0.008]	1.2 [0.046]	0.51 ± 0.08 [0.020 ± 0.003]
1/8	3.43 ± 0.2 [0.135 ± 0.008]	1.6 [0.062]	0.51 ± 0.08 [0.020 ± 0.003]
3/16	5.21 ± 0.3 [0.205 ± 0.010]	2.4 [0.093]	0.51 ± 0.08 [0.020 ± 0.003]
1/4	7.11 ± 0.3 [0.280 ± 0.010]	3.2 [0.125]	0.64 ± 0.08 [0.025 ± 0.003]
3/8	10.16 ± 0.4 [0.400 ± 0.015]	4.8 [0.187]	0.64 ± 0.08 [0.025 ± 0.003]
1/2	13.72 ± 0.4 [0.540 ± 0.015]	6.4 [0.250]	0.64 ± 0.08 [0.025 ± 0.003]
5/8***	16.90 ± 0.4 [0.665 ± 0.015]	8.0 [0.315]	0.76 ± 0.08 [0.030 ± 0.003]
3/4	20.45 ± 0.4 [0.805 ± 0.015]	9.5 [0.375]	0.76 ± 0.08 [0.030 ± 0.003]
1	25.53 ± 0.4 [1.055 ± 0.015]	12.7 [0.500]	0.89 ± 0.12 [0.035 ± 0.005]
1 1/4***	33.40 ± 0.7 [1.315 ± 0.025]	15.9 [0.625]	1.02 ± 0.15 [0.040 ± 0.006]
1 1/2	39.88 ± 0.8 [1.570 ± 0.030]	19.1 [0.750]	1.02 ± 0.15 [0.040 ± 0.006]
2	52.83 ± 1.0 [2.080 ± 0.040]	25.4 [1.000]	1.14 ± 0.16 [0.045 ± 0.007]
3	78.49 ± 1.0 [3.090 ± 0.040]	38.1 [1.500]	1.27 ± 0.20 [0.050 ± 0.008]
4	104.14 ± 1.3 [4.100 ± 0.050]	50.8 [2.000]	1.40 ± 0.23 [0.055 ± 0.009]

**Wall thickness will be less if tubing recovery is restricted during shrinkage.
***Nonstandard size; available by special order only.

Ordering Information

Color	Standard	Black (-0), white (-9), red (-2), blue (-6), yellow (-4), green (-5), sizes 3/64 through 1-inch only)
	Nonstandard	Brown (-1), orange (-3), violet (-7), gray (-8)
Size selection	Always order the largest size that will shrink snugly over the component to be covered. Special order sizes are available upon request.	
Standard packaging****	On spools.	
Ordering description*****	Specify product name, size and color (for example, Versafit 1/4-0).	

****Available in the convenient Mini-Spool packaging/dispensing system, for sizes 3/64” up to 1”.
*****Europe only. For supply to MIL, Def Stan and BS add -MS, -DS or -BS to ordering description.

Catalog 1654025
Revised 3-13

www.te.com

Dimensions are shown for reference purposes only. Specifications subject to change.

Dimensions are in millimeters unless otherwise specified.

USA: +1 800 522 6752
Asia Pacific: +86 0 400 820 6015
UK: +44 800 267 666

For additional support numbers please visit www.te.com

Versaflex

Expandable, Braided, Polyester Sleeving

Product Facts

- Excellent abrasion and cut-through resistance
- Lightweight
- Flexible (even at low temperatures)
- Fungus proof
- Not affected by most chemical and solvents, non-hygroscopic
- Versaflex-FR sleeving meets UL VW-1 and is self-extinguishing
- Wide range of sizes available
- RoHS compliant

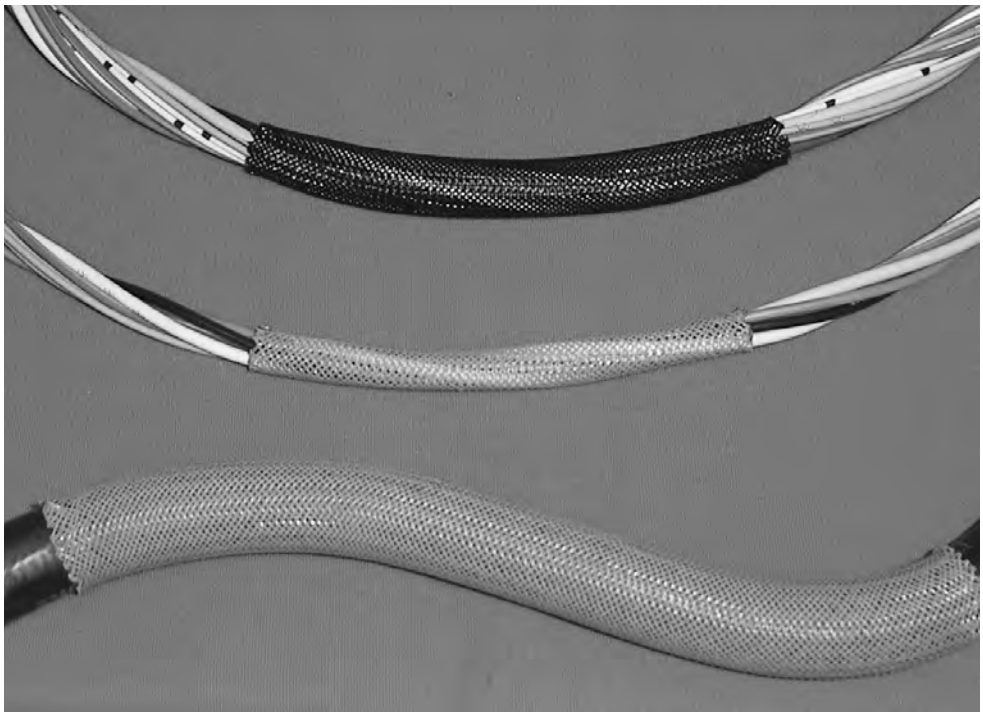

Applications

Versaflex sleeving is suited for the mechanical protection of wire harnesses, hoses, and all other applications where exceptional flexibility combined with superior abrasion/cut resistance is required. It also serves as an economical means for wire bundling that will not trap heat or moisture; expanding easily to fit over irregular shapes, then contracting to conform and grip. To prevent fraying, these products should be cut to length using a hot knife.

Installation

This product is cold applied.

Operating Temperature Range

-50°C to 150°C
[-58°F to 302°F]

(220°C [-58°F to 302°F] for short periods)

Specifications/Approvals

Series	UL	TE
Versaflex-FR	E306976 VW-1, 125°C	
Versaflex	—	RK-6772

Available in:	Americas	Europe	Asia Pacific
		■	■

Catalog 1654025
Revised 3-13

www.te.com

Dimensions are shown for reference purposes only. Specifications subject to change.

Dimensions are in millimeters unless otherwise specified.

USA: +1 800 522 6752
Asia Pacific: +86 0 400 820 6015
UK: +44 800 267 666

For additional support numbers please visit www.te.com

Versaflex (Continued)

Product Dimensions

Versaflex (metric)		
Nominal Size	Size Range	
	Minimum	Maximum
3 (0.118)	1 (0.039)	5 (0.197)
4 (0.158)	2 (0.079)	7 (0.276)
5 (0.197)	3 (0.118)	9 (0.354)
6 (0.236)	4 (0.158)	12 (0.472)
8 (0.315)	5 (0.197)	12 (0.472)
10 (0.394)	7 (0.276)	15 (0.591)
12 (0.472)	8 (0.315)	17 (0.669)
15 (0.591)	10 (0.394)	20 (0.787)
20 (0.787)	14 (0.551)	26 (1.024)
25 (0.984)	18 (0.709)	34 (1.339)
30 (1.181)	20 (0.787)	40 (1.575)
40 (1.575)	30 (1.181)	50 (1.969)
50 (1.969)	40 (1.575)	60 (2.362)

Versaflex (Imperial)		
Size	Nominal Size	Size Range
1/8	3 (0.118)	2.4 – 6.4 (0.094 – 0.252)
1/4	6 (0.236)	3.2 – 9.5 (0.125 – 0.375)
3/8	10 (0.394)	4.7 – 16 (0.185 – 0.630)
1/2	13 (0.512)	6.4 – 19 (0.252 – 0.748)
3/4	19 (0.748)	13 – 32 (0.512 – 1.260)
1-1/4	32 (1.256)	19 – 45 (0.748 – 1.772)
1-3/4	45 (1.772)	32 – 70 (1.260 – 2.756)
2	51 (2.008)	38 – 76 (1.496 – 2.992)

Versaflex-FR flame retardant, expandable polyester braid		
Size	Nominal Size	Size Range
1/8	3 (0.118)	2.4 – 6.4 (0.094 – 0.252)
1/4	6 (0.236)	3.2 – 9.5 (0.125 – 0.375)
3/8	10 (0.394)	4.7 – 16 (0.185 – 0.630)
1/2	13 (0.512)	6.4 – 19 (0.252 – 0.748)
3/4	19 (0.748)	13 – 32 (0.512 – 1.260)
1-1/4	32 (1.256)	19 – 45 (0.748 – 1.772)
1-3/4	45 (1.772)	32 – 70 (1.260 – 2.756)
2	51 (2.008)	38 – 76 (1.496 – 2.992)

Ordering Information

Color	Standard	Versaflex (metric) : Black (-0) Grey (-8) Versaflex (imperial) : Black (-0) Versaflex-FR : Black with a white X tracer (-09)
Standard packaging	On spools.	
Ordering description	Specify product name, size and color (for example, VERSAFLEX-FR-1/4-09-SP)	

Catalog 1654025
Revised 3-13

www.te.com

Dimensions are shown for reference purposes only. Specifications subject to change.

Dimensions are in millimeters unless otherwise specified.

USA: +1 800 522 6752
Asia Pacific: +86 0 400 820 6015
UK: +44 800 267 666

For additional support numbers please visit www.te.com

XFFR

Halogen-Free, Flame-Retardant, Heat-Shrinkable Tubing

Product Facts

- Emits minimal amounts of toxic or acid gasses during combustion
- Meets performance requirements of MIL-C-24640 and MIL-C-24643 cable jackets
- Resists moisture, fungus, and weathering
- Available in expansion ratios as high as 3:1
- XFFR has the following approvals:
  - ABS (American Bureau of Shipping)
  - Lloyd's (Lloyd's Register of Shipping)
- RoHS compliant

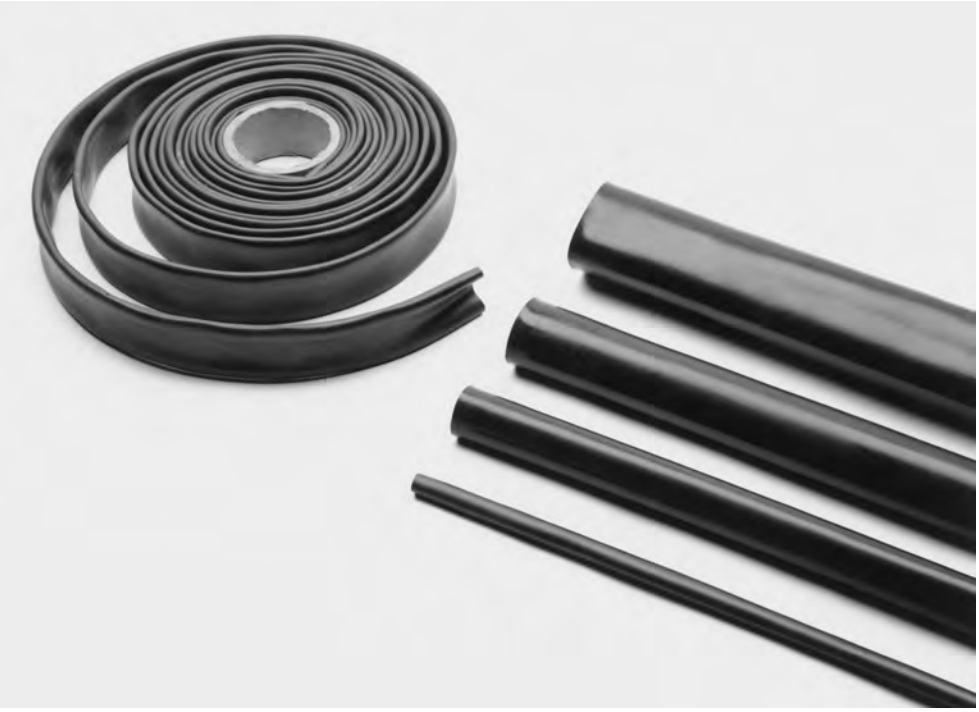

Applications

XFFR halogen-free tubing can be used for rejacketing and repairing halogen-free cables in any enclosed area where a flame-retardant, halogen-free environment is required. These environments include tunnels, buildings, mass transit vehicles, and ships. When installed with S-1305 tape, the tubing can also be used in applications requiring water sealing and protection from abrasion and corrosion.

Installation

Minimum shrink temperature: 70°C [158°F]

Minimum full recovery temperature: 121°C [250°F]

Operating Temperature Range

-55°C to 110°C
[-67°F to 230°F]

Specifications/Approvals

Series	Military	Industry	TE
XFFR	MIL-C-24640 MIL-C-24643	NES 713 NES 711	RW-2016

Available in:	Americas	Europe	Asia Pacific
	■	■	■

Catalog 1654025
Revised 3-13

www.te.com

Dimensions are shown for reference purposes only. Specifications subject to change.

Dimensions are in millimeters unless otherwise specified.

USA: +1 800 522 6752
Asia Pacific: +86 0 400 820 6015
UK: +44 800 267 666

For additional support numbers please visit www.te.com

XFFR (Continued)

Product Dimensions

Size	Inside Diameter		Recovered Wall Thickness*
	Minimum Expanded as Supplied	Maximum Recovered After Heating	After Heating (Nominal)
XFFR-03	7.62 [0.300]	2.54 [0.100]	2.03 [0.080]
XFFR-04	10.16 [0.400]	3.81 [0.150]	2.03 [0.080]
XFFR-07	19.05 [0.750]	5.59 [0.220]	2.03 [0.080]
XFFR-11	27.94 [1.100]	9.52 [0.375]	2.67 [0.105]
XFFR-15	38.10 [1.500]	12.70 [0.500]	3.05 [0.120]
XFFR-20	50.80 [2.000]	19.05 [0.750]	3.05 [0.120]
XFFR-30	76.20 [3.000]	31.75 [1.250]	4.06 [0.160]

*Wall thickness will be less if tubing recovery is restricted during shrinkage.

Ordering Information

Color	Standard	Black (-0)
Size selection	Always order the largest size that will shrink snugly over the component to be covered.	
Standard packaging	1.2-meter [4-foot] or 7.5-meter [25-foot] lengths.	

Part Numbering System

XFFR - 03 X 4 / NM

- **"NM"** - no mark
- **Length** in feet (4 feet standard)
- **Size**
- **Family**

Catalog 1654025
Revised 3-13

www.te.com

Dimensions are shown for reference purposes only. Specifications subject to change.

Dimensions are in millimeters unless otherwise specified.

USA: +1 800 522 6752
Asia Pacific: +86 0 400 820 6015
UK: +44 800 267 666

For additional support numbers please visit www.te.com

ZH-100

Flexible, Thin-Wall, Low-Fire-Hazard Tubing

Product Facts

- 2:1 shrink ratio
- Low smoke emissions
- Flexible, flame-retardant
- No added halogens
- Low evolution of acid gases
- RoHS compliant

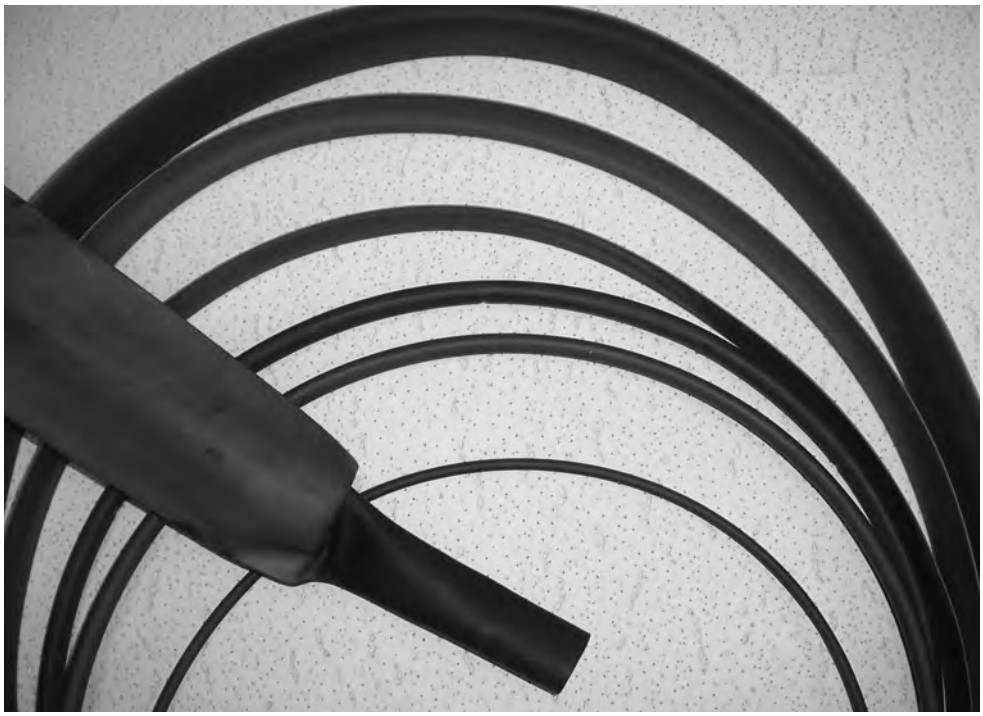

Applications

ZH-100 is a flexible, thin-wall, heat-shrinkable tubing designed for low-fire-hazard applications. ZH-100 contains no added halogens, and exhibits excellent fire safety characteristics combined with low evolution of acid gases, while retaining good mechanical and fluid resistance properties.

Installation

Minimum shrink temperature: 80°C [176°F]

Minimum full recovery temperature: 120°C [248°F]

Operating Temperature Range

-30°C to 105°C
[-22°F to 221°F]

Specifications/Approvals

Series	Industry	TE
ZH-100	BR 1326A	RW-2031

Available in:	Americas	Europe	Asia Pacific
	■	■	■

Catalog 1654025
Revised 3-13

www.te.com

Dimensions are shown for reference purposes only. Specifications subject to change.

Dimensions are in millimeters unless otherwise specified.

USA: +1 800 522 6752
Asia Pacific: +86 0 400 820 6015
UK: +44 800 267 666

For additional support numbers please visit www.te.com

ZH-100 (Continued)

Product Dimensions

Size	Inside Diameter		Recovered Wall Thickness*
	Minimum Expanded as Supplied	Maximum Recovered After Heating	After Heating
1/8	3.2 [0.125]	1.6 [0.062]	0.50 ± 0.10 [0.019 ± 0.004]
3/16	4.8 [0.187]	2.4 [0.093]	0.50 ± .0.10 [0.019 ± 0.004]
1/4	6.4 [0.250]	3.2 [0.125]	0.65 ± 0.15 [0.026 ± 0.006]
3/8	9.5 [0.375]	4.8 [0.187]	0.65 ± 0.15 [0.026 ± 0.006]
1/2	12.7 [0.500]	6.4 [0.250]	0.65 ± 0.15 [0.026 ± 0.006]
3/4	19.0 [0.750]	9.5 [0.375]	0.75 ± 0.15 [0.030 ± 0.006]
1	25.4 [1.000]	12.7 [0.500]	0.90 ± 0.15 [0.035 ± 0.006]
1 1/2	38.0 [1.500]	19.0 [0.750]	1.00 ± 0.20 [0.039 ± 0.008]
2	51.0 [2.000]	25.4 [1.000]	1.15 ± 0.25 [0.045 ± 0.010]

*Wall thickness will be less if tubing recovery is restricted during shrinkage.

Ordering Information

Color	Standard	Black (-0)
Size selection	Always order the largest size that will shrink snugly over the component to be covered. Special order sizes are available upon request.	
Standard packaging	On spools.	
Ordering description	Specify product name, size and color (for example, ZH-100 1/8-0).	

Catalog 1654025
Revised 3-13

www.te.com

Dimensions are shown for reference purposes only. Specifications subject to change.

Dimensions are in millimeters unless otherwise specified.

USA: +1 800 522 6752
Asia Pacific: +86 0 400 820 6015
UK: +44 800 267 666

For additional support numbers please visit www.te.com

ZHTM

Heat-Shrinkable, Flexible Tubing with Low Toxicity for Fire Safety Applications

Product Facts

- 2:1 shrink ratio
- Low smoke emission
- System 100 tubing
- RoHS compliant

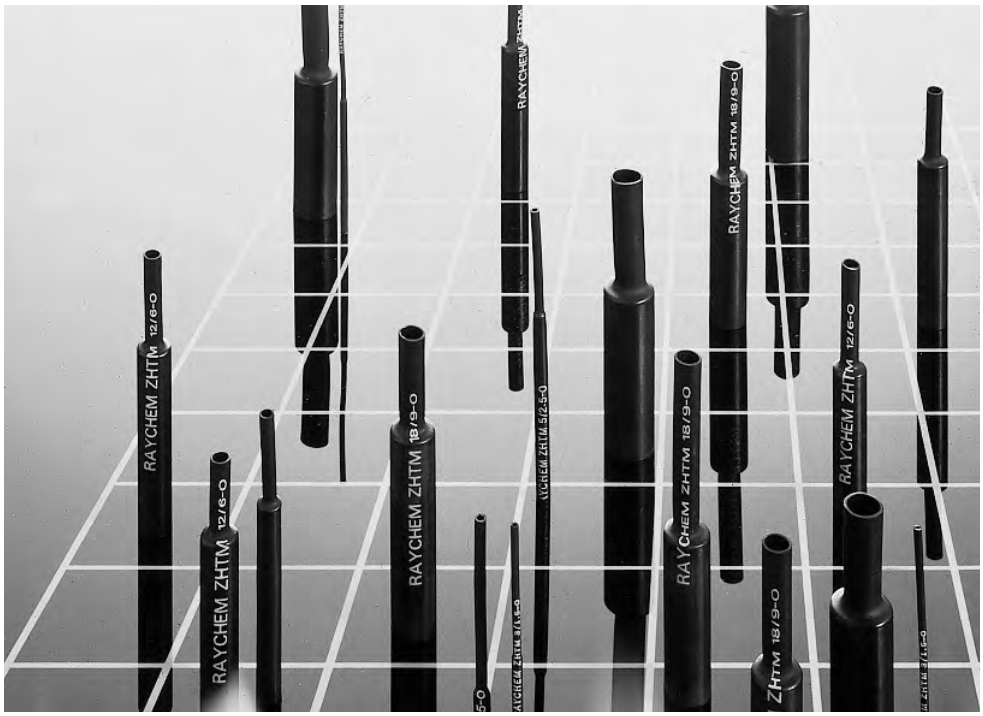

Applications

A flexible, thick-wall, heat-shrinkable tubing to be used in conjunction with -100 molded parts and Zerohal cable to form System 100. This material exhibits excellent fire safety characteristics combined with low smoke emission and low evolution of acid gases while retaining good mechanical and fluid-resistance properties.

Used for insulation and protection of cables, harnesses, and electrical and electronic components in enclosed spaces, such as in marine applications, mass transit systems, and offshore installations, to reduce toxicity risks, or where equipment would be irreparably damaged by corrosive products of combustion.

Installation

Minimum shrink temperature: 80°C [176°F]

Minimum full recovery temperature: 121°C [250°F]

Operating Temperature Range

-30°C to 105°C
[-22°F to 221°F]

Specifications/Approvals

Series	Military	Agency	Industry	TE
ZHTM	Def. Stan. 59-97 Issue 3 Type 8	BS 4G-198 Part 3 Type 15 VG 95343 Part 5 Type L VDE 0341/Pt 9005	BR 1326A	RW-2058

Available in:	Americas	Europe	Asia Pacific
	■	■	■

Catalog 1654025
Revised 3-13

www.te.com

Dimensions are shown for reference purposes only. Specifications subject to change.

Dimensions are in millimeters unless otherwise specified.

USA: +1 800 522 6752
Asia Pacific: +86 0 400 820 6015
UK: +44 800 267 666

For additional support numbers please visit www.te.com

ZHTM (Continued)

Product Dimensions

Size	Inside Diameter		Recovered Wall Thickness*
	Minimum Expanded as Supplied	Maximum Recovered After Heating	After Heating
3/1.5	3.0 [0.118]	1.5 [0.059]	0.70 ± 0.10 [0.028 ± 0.004]
5/2.5	5.0 [0.197]	2.5 [0.098]	0.75 ± 0.12 [0.030 ± 0.005]
8/4	8.0 [0.315]	4.0 [0.157]	0.80 ± 0.15 [0.031 ± 0.006]
12/6	12.0 [0.472]	6.0 [0.236]	0.90 ± 0.15 [0.035 ± 0.006]
18/9	18.0 [0.709]	9.0 [0.354]	1.00 ± 0.18 [0.039 ± 0.007]
24/12	24.0 [0.945]	12.0 [0.472]	1.10 ± 0.20 [0.043 ± 0.008]
40/20	40.0 [1.575]	20.0 [0.789]	1.30 ± 0.23 [0.051 ± 0.009]
50/30	50.0 [1.969]	30.0 [1.181]	1.50 ± 0.28 [0.059 ± 0.011]

*Wall thickness will be less if tubing recovery is restricted during shrinkage.

Ordering Information

Color	Standard	Black (-0)
Size selection	Always order the largest size that will shrink snugly over the component to be covered. Special order sizes are available upon request.	
Standard packaging	On spools.	
Ordering description**	Specify product name, size and color (for example, ZHTM 8/4-0-SP).	

**Europe only. For supply to Def Stan and BS add -DS or -BS to ordering description.

Engineering Notes

Catalog 1654025
Revised 3-13

www.te.com

Dimensions are shown for reference purposes only. Specifications subject to change.

Dimensions are in millimeters unless otherwise specified.

USA: +1 800 522 6752
Asia Pacific: +86 0 400 820 6015
UK: +44 800 267 666

For additional support numbers please visit www.te.com

Table of Contents

Overview 4-2
General Information 4-3, 4-4
Selection Tables 4-5, 4-6
Part Numbering System 4-7
Visual Selection Guide ....4-8 to 4-20
Boot Adapter Selection Tables ....4-21 to 4-23
Material Selection Table 4-24
Materials

-3	Semirigid modified polyolefin	4-25, 4-26
-4	Flexible polyolefin	4-27, 4-28
-12	Modified fluoroelastomer	4-29, 4-30
-25	Fluid-resistant modified elastomer	4-31, 4-32
-25S	Fluid-resistant screened elastomer	4-33, 4-34
-50	Fluid-resistant modified elastomer	4-35, 4-36
-51	Chemical-resistant fluoroelastomer	4-37, 4-38
-55	Flexible fluoropolymer	4-39, 4-40
-71	Semirigid modified polyolefin	4-41, 4-42
-100	Low-fire-hazard material	4-43, 4-44
-100S	Low-fire-hazard screened material	4-45, 4-46
-125	Flexible fluoropolymer	4-47, 4-48
-770	CBRN fluoroelastomer	4-49 to 4-51
-780	CBRN fluroelastomer	4-52 to 4-54
-790	CBRN fluroelastomer	4-55 to 4-57

Caps

101A011 to 094	End caps	4-58, 4-59
SSC	Heat-shrinkable end caps	4-60, 4-61

Boots

202A111 to 196	Straight boot	4-62
202C611 to 663	Uniboot	4-63
202D121 to 196	Straight, lipped boot	4-64
202D211 to 299	Straight, lipped boot	4-65
202D921 to 963	Straight, lipped boot	4-66
202F211 to 274	Straight, lipped boot	4-67
202G211 to 253	Straight, lipped boot	4-68
202G611 to 653	Uniboot	4-69
202K121 to 185	Straight, lipped boot	4-70
214A011 to 052	D-subminiature, straight boot	4-71
214A311 to 352	D-subminiature, straight boot	4-72
222A111 to 196	Right-angled boot	4-73
222D121 to 196	Right-angled, lipped boot	4-74
222D211 to 299	Right-angled, lipped boot	4-75
222D921 to 963	Right-angled, lipped boot	4-76
222F211 to 285	Right-angled, lipped boot	4-77
222K121 to 185	Right-angled, lipped boot	4-78
234A011 to 071	D-subminiature, right-angled boot	4-79
234A111 to 152	D-subminiature, side-entry boot	4-80
234A611 to 671	D-subminiature, 90° end-entry boot	4-81
242W042 to 063	45° angled boot	4-82
Micro Molded Shapes	Microboots	4-83 to 4-87

Feedthroughs

207W213 to 256	Two-part feedthrough	4-88
CES	Heat-shrinkable cable entry seals	4-89 to 4-92

Transitions

301A011 to 048	T transition	4-93
301A511 to 514	Slimline T transition	4-94
322A112 to 158	T transition	4-95
342A012 to 058	45° side-breakout transition	4-96
362A014 to 114	30° side-breakout transition	4-97
381A301 to 304	Slimline Y transition	4-98

Note: Users should independently evaluate the suitability of the product for their application. Before ordering, check with TE Connectivity for most current data.

Catalog 1654025
Revised 3-13

www.te.com

Dimensions are shown for reference purposes only. Specifications subject to change.

Dimensions are in millimeters unless otherwise specified.

USA: +1 800 522 6752
Asia Pacific: +86 0 400 820 6015
UK: +44 800 267 666

For additional support numbers please visit www.te.com

Table of Contents (Continued)

382A012 to 046	Y transition	4-99
382C312, 322 & 332	Slimline Y transition	4-100
462A011 to 060	Transition, one to three cables	4-101
462A421 to 424	Slimline transition, one to three cables	4-102
562A011 to 067	Transition, one to four cables	4-103
QFT	Configurable heat-shrink transition	4-104, 4-105
SSB, T, F to 8S	Chem-X Heavy Duty Breakout Boots	4-106, 4-107
Accessories		
202W302 to 342	Heat-shrink bobbins	4-108, 4-109
400W242	Heat-shrink positioning ring	4-110, 4-111
RayOLOn Kits	Roll-on sealing sleeve	4-112, 4-113
SEB	Raychem Side Entry Bushing	4-114
shrinkHOoP	Cable clamp heat-shrink grommet	4-115 to 4-117
XL Products	Conversion Table	4-118, 4-119
Sigmaform Products	Conversion Table	4-120

Overview

TE heat-shrinkable molded parts, with adhesive coating, form a watertight seal, protecting cables and equipment from corrosion and mechanical abuse while providing excellent electrical insulating properties. Meeting requirements for most mass-transit, military, and commercial marine applications, Raychem brand molded parts include:

- SSC end caps, which provide optimum waterproofing and environmental protection for underwater, underground, or outdoor applications. The end caps are highly resistant to moisture, fungus, and weathering.
- Heat-shrinkable boots and transitions, which replace tapes, mold-in-place epoxies, and grease. These molded parts can be used for cable breakouts, transitions, and terminations. For example, they provide reliable sealing to specific altitudes on standard Navy cable jackets and on lead, steel, aluminum, copper, and most elastomeric insulation materials.

All of these molded parts fit a wide variety of applications.

To select the right part for your application, follow these steps:

- Select the necessary shape.
- Match the shape with the appropriate material.
- Select a compatible adhesive, if needed, to provide additional environmental protection. Adhesives come either preinstalled or as separate components (see Section 5).

Also available is an extensive line of adapters (see Section 6) and heat-shrinkable tubings (see Section 3) to further integrate and strengthen harness assemblies.

Whatever your application, TE molded parts almost always meet the performance characteristics you require, including operation in low- and high-temperature environments; mechanical strength; resistance to fluids, flame, and mechanical abuse; environmental sealing; and strain relief.

Catalog 1654025
Revised 3-13

www.te.com

Dimensions are shown for reference purposes only. Specifications subject to change.

Dimensions are in millimeters unless otherwise specified.

USA: +1 800 522 6752
Asia Pacific: +86 0 400 820 6015
UK: +44 800 267 666

For additional support numbers please visit www.te.com

General Information

Bulbous Molded Parts

TE bulbous-shaped molded parts provide rugged mechanical and environmental protection, meet numerous specifications, and have been used successfully in military wire and cable harnesses for more than 30 years.

Most connector strain relief boots come in two versions:

- With an adapter lip molded into the “H” end, which locks into the groove on the backshell adapter (part number is identified with a “D” or “K”).
- Without the adapter lip (the boot may be installed directly on the rear of connector threads 12 mm [.472] long or longer). This part number is identified with an “A.”

Many other optional features are available, such as molding ports and drain holes. For other modifications and custom shapes, please contact TE.

Modifications

Certain variations of the standard shapes, such as shorter leg lengths or specific over expansions, are possible. Modifications must be requested prior to your order, for feasibility.

Molding Port Modifications (-00)

Some specifications call for potting the molded shape with sealant to provide additional protection from moisture. Most of the bulbous boots and transitions can be ordered with molding ports for this purpose.

Drain Hole Modification (-88)

Some specifications require drain holes in the molded part to provide an exit for condensation. Drain holes must be requested when you place your order.

Specials

Complete design, tooling, and production of custom molded shapes and special adaptations are also possible. Estimates are made upon request.

Catalog 1654025
Revised 3-13

www.te.com

Dimensions are shown for reference purposes only. Specifications subject to change.

Dimensions are in millimeters unless otherwise specified.

USA: +1 800 522 6752
Asia Pacific: +86 0 400 820 6015
UK: +44 800 267 666

For additional support numbers please visit www.te.com

General Information (Continued)

Breakout Boots

Heavy-duty breakouts provide mechanical strain relief and environmental sealing for power cables where the cable jacket is cut back and conductors broken out.

These boots are used widely in ship building and meet the requirements of the following:

- Lloyd's Register of Shipping
- American Bureau of Shipping (ABS)
- DOD-STD-2003
- SAE-AS-81765/1

Cable End Caps

Heat-shrinkable end caps provide a reliable method of sealing power cables, pipes, conduit, and other cylindrical objects against corrosion and moisture penetration.

Slim-Line Molded Parts

With their low profile, these flexible molded parts conform to cables better and create less bulk at transition points and connectors than bulbous molded parts.

TE molded parts are available in a variety of slim-line shapes, including straight and right-angle boots as well as transitions. A small family of parts can provide a wide variety of expansions (under expansion, over expansion, cutoff). Modifications are easily provided.

Dimensions are shown for reference purposes only. Specifications subject to change.

Dimensions are in millimeters unless otherwise specified.

USA: +1 800 522 6752
Asia Pacific: +86 0 400 820 6015
UK: +44 800 267 666

For additional support numbers please visit www.te.com

Selection Tables

Boots

Application	Family Description	Typical Shapes
Lipped boots for use with a circular adapter	202D121 to 196 222D121 to 196 202K121 to 185 222K121 to 185 242W042 to 063	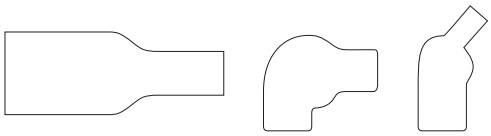
Nonlipped boots for use directly on a circular connector	202A111 to 196 222A111 to 196	
Low-profile lipped boots for use with a circular adapter	202D211 to 299 222D211 to 299 202F211 to 274 222F211 to 285 202G211 to 253	
Lipped boots for use with a circular adapter	202D921 to 963 222D921 to 963	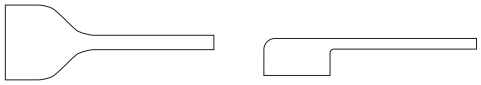
Lipped boots with compressible design for use with a circular adapter	202C611 to 663 202G611 to 653	
Adapter boots for use with D-subminiature connectors	214A011 to 052 234A011 to 071 214A311 to 352 234A111 to 152 234A611 to 671	

Catalog 1654025
Revised 3-13

www.te.com

Dimensions are shown for reference purposes only. Specifications subject to change.

Dimensions are in millimeters unless otherwise specified.

USA: +1 800 522 6752
Asia Pacific: +86 0 400 820 6015
UK: +44 800 267 666

For additional support numbers please visit www.te.com

Selection Tables (Continued)

Transitions

Application	Family Description	Typical Shapes
Breakout Boots	SSB, T, F, 6S, 85	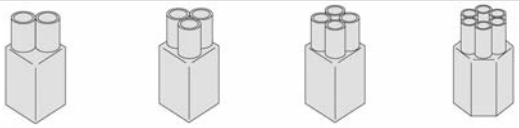
"T" Transitions	301A011 to 048 301A511 to 514 322A112 to 158	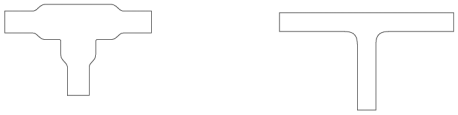
45° Transitions	342A012 to 058	
30° Transitions	362A014 to 114	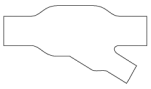
“Y” Transitions	381A301 to 304 382A012 to 046	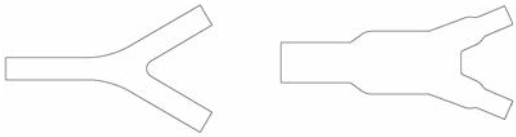
3:1 Transitions	462A011 to 060 462A421 to 424	
4:1 Transitions	562A011 to 067	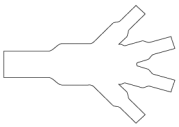

Shape Selection: Other Products

Application	Family Description	Typical Shapes
Feedthroughs	207W213 to 256 and CES	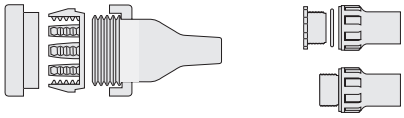
D-Subminiatures	214A011 to 052	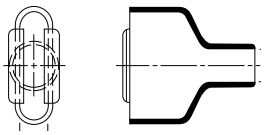
End Caps	101A011 to 094 and SSC	101A Series 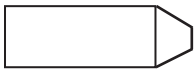 SSC Series

Dimensions are shown for reference purposes only. Specifications subject to change.

Dimensions are in millimeters unless otherwise specified.

USA: +1 800 522 6752
Asia Pacific: +86 0 400 820 6015
UK: +44 800 267 666

For additional support numbers please visit www.te.com

Part Numbering System

2 0 2D 1 21 - 3 - 01 / 42 - 0

Color (0 = Black). Other colors factory quote

Optional Adhesive* Coating (precoated in factory)

Modification (available on request)
- Over expansion
- Cutoff
- Molding ports (injection and vent)

Material**

Size of Part in Family: From 11 (= smallest) to 99 (= largest)

Family Number

Type of Part:
A = Nonlipped boots/transitions
C = Lipped boot
D = Lipped boot
F = Lipped boot
K = Lipped boot
S = Rayaten
G = Lipped boot
W = Other shapes

Angle of Part:

All openings	One opening
Circular	**Noncircular**
0 = Straight	**0 = Straight**
2 = 90˚	3 = 90˚
4 = 45˚	5 = 45˚
6 = 30˚	7 = 30˚

Number of openings in the part

*See section 5 for details on adhesives.
**See page 4-24 for details on materials.

Catalog 1654025
Revised 3-13

www.te.com

Dimensions are shown for reference purposes only. Specifications subject to change.

Dimensions are in millimeters unless otherwise specified.

USA: +1 800 522 6752
Asia Pacific: +86 0 400 820 6015
UK: +44 800 267 666

For additional support numbers please visit www.te.com

Visual Selection Guide

Boots: Circular Connectors — Lipped

Lipped Boots for Use With an Adapter

As supplied

After recovery

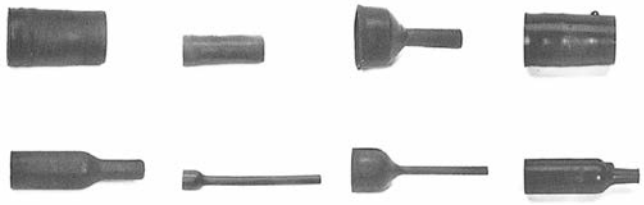

202D121 through 196 | 202D211 through 299 | 202D921 through 963 | 202K121 through 185

As supplied

After recovery

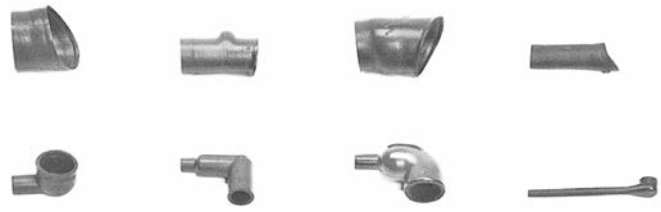

222B012 through 063 | 222B112 and 123 | 222D121 through 196 | 222D211 through 299

As supplied

After recovery

222D921 through 963 | 222K121 through 185 | 242 A312 and 322

Dimensions are shown for reference purposes only. Specifications subject to change.

Dimensions are in millimeters unless otherwise specified.

USA: +1 800 522 6752
Asia Pacific: +86 0 400 820 6015
UK: +44 800 267 666

For additional support numbers please visit www.te.com

Visual Selection Guide (Continued)

Boots: Circular Connectors — Nonlipped

Nonlipped Boots for Direct Attachment on Connectors

As supplied

After recovery

202A011 through 096 | 202A111 through 196 | 202A212 through 264 | 202A312 through 364

As supplied

After recovery

202A915 | 202A921 | 203A021

As supplied

After recovery

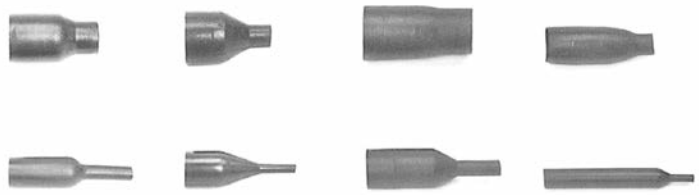

203A211 | 203A312 | 204A011 | 204A311

As supplied

After recovery

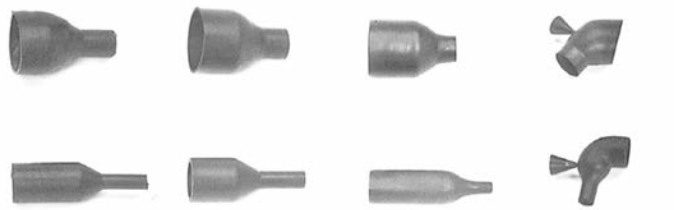

204A511 | 204A612 | 208A011 through 086 | 222A011

Catalog 1654025
Revised 3-13

www.te.com

Dimensions are shown for reference purposes only. Specifications subject to change.

Dimensions are in millimeters unless otherwise specified.

USA: +1 800 522 6752
Asia Pacific: +86 0 400 820 6015
UK: +44 800 267 666

For additional support numbers please visit www.te.com

Visual Selection Guide (Continued)

Boots: Circular Connectors — Nonlipped (Continued)

Nonlipped Boots for Direct Attachment on Connectors

As supplied

After recovery

222A111 through 196 | 222A213 through 255 | 234A313 through 355 | 223A213 through 233 | 224A012

As supplied

After recovery

226A075 | 228A011 through 097 | 242A142 | 243A012 & 022 | 246A166

As supplied

After recovery

202B521 through 598

Boots: Circular Connectors–Slim-Line

As supplied

After recovery

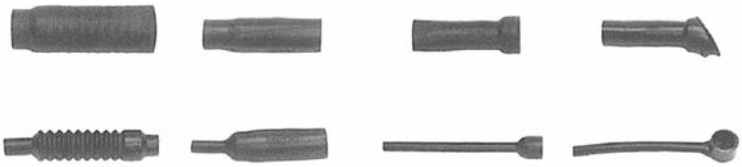

202C611 through 633
202G621 through 653 | 202E334 through 346 | 202F211 through 274
202G211 through 253 | 222F211 through 285

Dimensions are shown for reference purposes only. Specifications subject to change.

Dimensions are in millimeters unless otherwise specified.

USA: +1 800 522 6752
Asia Pacific: +86 0 400 820 6015
UK: +44 800 267 666

For additional support numbers please visit www.te.com

Visual Selection Guide (Continued)

Boots: Rectangular Connectors

As supplied

After recovery

214A011 through 052 | 214A124 and 133 | 214A311 through 352

As supplied

After recovery

214A814

As supplied

After recovery

234A011 through 071 | 234A111 | 234A333 | 234A443

As supplied

After recovery

234B111

Catalog 1654025
Revised 3-13

www.te.com

Dimensions are shown for reference purposes only. Specifications subject to change.

Dimensions are in millimeters unless otherwise specified.

USA: +1 800 522 6752
Asia Pacific: +86 0 400 820 6015
UK: +44 800 267 666

For additional support numbers please visit www.te.com

Visual Selection Guide (Continued)

Transitions: Bulbous

As supplied

After recovery

301A011 through 048 | 302A012 through 037 | 302A214 | 322A012 through 037 | 322A112 through 158

As supplied

After recovery

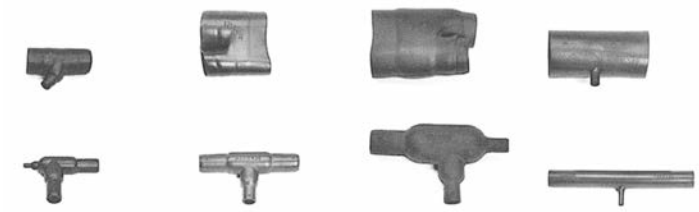

322A315 | 322A412 through 434 | 322A514 | 322B813

As supplied

After recovery

323A222 | 341A015 | 342A012 through 058

As supplied

After recovery

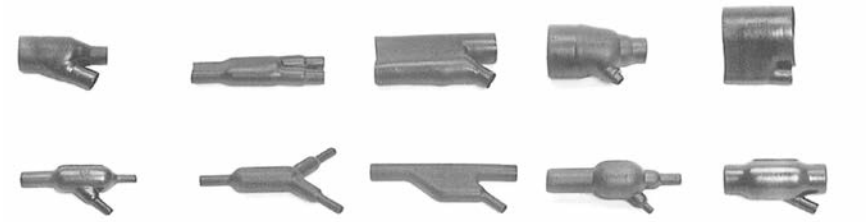

342A112 through 138 | 342A215 | 342A313 and 323 | 343A014 through 027 | 362A014 through 114

Dimensions are shown for reference purposes only. Specifications subject to change.

Dimensions are in millimeters unless otherwise specified.

USA: +1 800 522 6752
Asia Pacific: +86 0 400 820 6015
UK: +44 800 267 666

For additional support numbers please visit www.te.com

Visual Selection Guide (Continued)

Transitions: Bulbous
(Continued)

As supplied

After recovery

363A018 | 381A015 | 381A115 | 382A012 through 046 | 402A013

As supplied

After recovery

403A123 through 155 | 413A013 and 024 | 422A011 | 422A414

As supplied

After recovery

422A616 | 422A716 | 422A813 | 423A014 | 423A117

As supplied

After recovery

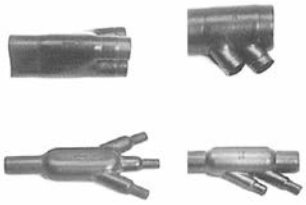

462A011 through 060 | 462A214

Catalog 1654025
Revised 3-13

www.te.com

Dimensions are shown for reference purposes only. Specifications subject to change.

Dimensions are in millimeters unless otherwise specified.

USA: +1 800 522 6752
Asia Pacific: +86 0 400 820 6015
UK: +44 800 267 666

For additional support numbers please visit www.te.com

Visual Selection Guide (Continued)

Transitions: Bulbous
(Continued)

As supplied

After recovery

502A812 through 845 | 522A013 | 561A017

As supplied

After recovery

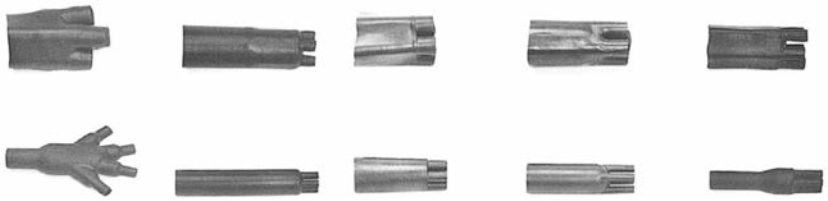

562A011 through 067 | 602A012 | 602A022 | 602A114 | 602A212

As supplied

After recovery

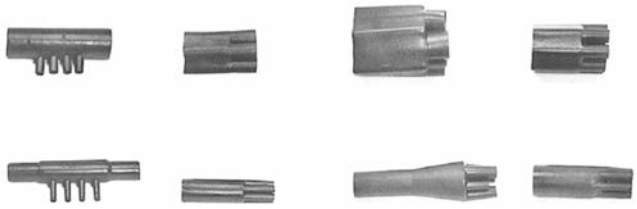

622A014 | 703A155 | 704A011 and 012 | 902A014

Transitions: Slim-Line

As supplied

After recovery

301A511 through 514 | 381A301 through 304 | 462A421 through 424

Visual Selection Guide (Continued)

Covers

As supplied

After recovery

102A911 102A951 102A961 102A962 102A981

As supplied

After recovery

102A992 102A993 102A994 202A817

As supplied

After recovery

220A012 through 023 234A211 234B111 and 122 254A015

As supplied

After recovery

302A734 401A112 and 402A212

Catalog 1654025
Revised 3-13

www.te.com

Dimensions are shown for reference purposes only. Specifications subject to change.

Dimensions are in millimeters unless otherwise specified.

USA: +1 800 522 6752
Asia Pacific: +86 0 400 820 6015
UK: +44 800 267 666

For additional support numbers please visit www.te.com

Visual Selection Guide (Continued)

Covers (Continued)

As supplied

After recovery

401A212 and 403A312 | 401A414 | 403A016 | 501A012 and 502A212

As supplied

After recovery

601A012

Sleeves

As supplied

After recovery

201A711 through 792 | 202B811 through 821

As supplied

After recovery

207W213 through 264 with A-type nut | 207W213-x-01 through 264-x-01 with B-type nut

Dimensions are shown for reference purposes only. Specifications subject to change.

Dimensions are in millimeters unless otherwise specified.

USA: +1 800 522 6752
Asia Pacific: +86 0 400 820 6015
UK: +44 800 267 666

For additional support numbers please visit www.te.com

Visual Selection Guide (Continued)

Caps

As supplied

After recovery

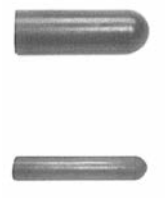

101A011 thru 094

Miscellaneous

204A711 and 002A011
Riser and Plug
(Not heat-shrinkable)

Catalog 1654025
Revised 3-13

www.te.com

Dimensions are shown for reference purposes only. Specifications subject to change.

Dimensions are in millimeters unless otherwise specified.

USA: +1 800 522 6752
Asia Pacific: +86 0 400 820 6015
UK: +44 800 267 666

For additional support numbers please visit www.te.com

Visual Selection Guide (Continued)

Selected Molded Shapes Families

As supplied

After recovery

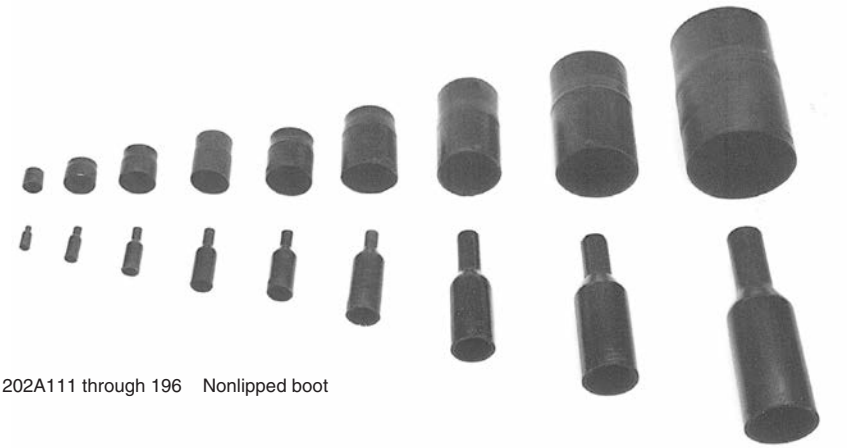

202A111 through 196 Nonlipped boot

As supplied

After recovery

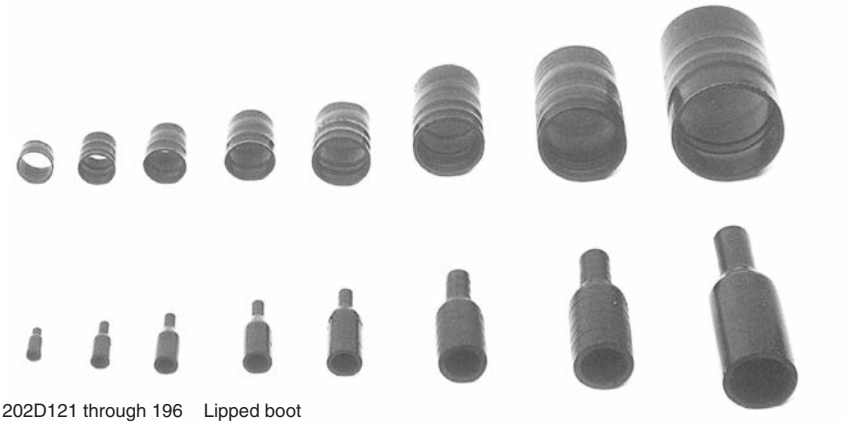

202D121 through 196 Lipped boot

Dimensions are shown for reference purposes only. Specifications subject to change.

Dimensions are in millimeters unless otherwise specified.

USA: +1 800 522 6752
Asia Pacific: +86 0 400 820 6015
UK: +44 800 267 666

For additional support numbers please visit www.te.com

Visual Selection Guide (Continued)

Selected Molded Shapes Families (Continued)

As supplied

After recovery

202A212 through 264 Nonlipped boot

202D211 through 299 Lipped boot

As supplied

After recovery

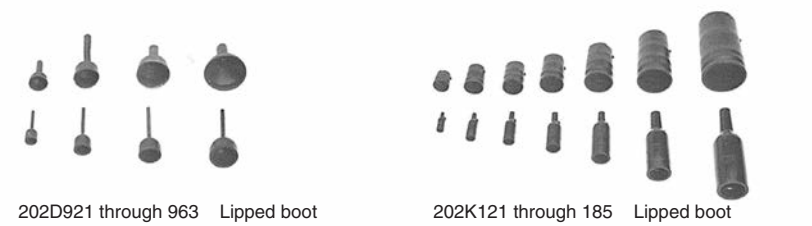

202D921 through 963 Lipped boot

202K121 through 185 Lipped boot

As supplied

After recovery

207W213 through 264 Feedthrough

214A011 through 052 Rectangular boot

As supplied

After recovery

222A111 through 196 90° boot nonlipped

222A213 through 255 90° boot nonlipped

Catalog 1654025
Revised 3-13

www.te.com

Dimensions are shown for reference purposes only. Specifications subject to change.

Dimensions are in millimeters unless otherwise specified.

USA: +1 800 522 6752
Asia Pacific: +86 0 400 820 6015
UK: +44 800 267 666

For additional support numbers please visit www.te.com

Visual Selection Guide (Continued)

Selected Molded Shapes Families (Continued)

As supplied

After recovery

222A313 through 355 90° boot nonlipped

222D121 through 196 90° boot lipped

As supplied

After recovery

222D211 through 299 90° boot lipped

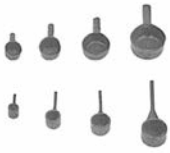

222D921 though 963 90° boot lipped

As supplied

After recovery

222K121 through 185 90° boot lipped

301A011 through 048 T transition

Dimensions are shown for reference purposes only. Specifications subject to change.

Dimensions are in millimeters unless otherwise specified.

USA: +1 800 522 6752
Asia Pacific: +86 0 400 820 6015
UK: +44 800 267 666

For additional support numbers please visit www.te.com

Boot Adapter Selection Tables

Table 1. Boots

Boot Type	Material Dash Number	Part No.	Dimensions: Cable Diameter Range	Dimensions: Length	Fits Adapter Order Number: Solid	Fits Adapter Order Number: Spin Coupling	Fits Adapter Order Number: Entry Size Shielded	Fits Adapter Order Number: Tinel-Lock
Uni-boot	50, 51 71	202C611	4.83-9.65 [.19-.38]	120.65 [4.75]	—	—	04	04
		202C621	8.13-16.26 [.32-.64]	133.35 [5.25]	12	12—14	06-08	04-07
		202C632	12.70-25.40 [.50-1.00]	146.05 [5.75]	14-16	16-18	10-14	10-16
		202C642	17.53-35.05 [.69-1.38]	158.75 [6.25]	18-20	20	12-18	12-18
		202C653	22.35-44.20 [.88-1.74]	171.45 [6.75]	22-32	22-32	18-20	16-20
		202C663	22.86-55.63 [.90-2.19]	236.22 [9.30]	24, 28, 31	32, 36	—	—
	55, 780, 790	202G621	8.13-16.26 [.32-.64]	133.86 [5.27]	12-14	12-14	06-08	04-07
		202G632	12.70-25.40 [.50-1.00]	151.13 [5.95]	16	16-18	10-14	08-12
		202G642	17.53-35.05 [.69-1.38]	157.23 [6.19]	18-20	20	12-18	12-18
		202G653	22.35-44.20 [.88-1.74]	170.18 [6.70]	22-32	22-32	18-20	16-22
		—	—	—	16-24, 61	22-28, 61	—	—
Low-profile, Straight	50, 51 71 770	202F211	6.60-15.75 [.26-.62]	105.16 [4.14]	10	08-10	04-07	04-07
		202F221	7.62-19.30 [.30-.76]	123.95 [4.88]	12-14	12-14	07-10	05-08
		202F232	8.89-22.86 [.35-.90]	146.30 [5.76]	16	16-18	10-14	08-12
		202F242	10.16-27.18 [.40-1.07]	172.21 [6.78]	18-20	20	12-18	12-16
		202F253	10.92-29.97 [.43-1.18]	185.16 [7.29]	22	22	18-20	16-18
		202F263	12.70-36.83 [.50-1.45]	213.61 [8.41]	24-28	24-28	20	18-20
		202F274	14.99-42.93 [.59-1.69]	203.20 [8.00]	24	32	—	—
	55 780, 790	202G221	7.62-19.30 [.30-.76]	121.16 [4.77]	12-14	12-14	07-10	05-08
		202G232	8.89-22.86 [.35-.90]	138.68 [5.46]	16	16-18	10-14	10-12
		202G242	10.16-27.18 [.40-1.07]	159.51 [6.28]	18-20	20	14-18	12-16
		202G253	10.92-29.97 [.43-1.18]	177.80 [7.00]	22-28	22-24	16-20	16-18
		—	—	—	16-20	20-24	—	—
Low-profile, 90°	50, 51 71 770	222F211	6.60-15.75 [.26-.62]	105.16 [4.14]	10	08-10	04-07	04-07
		222F221	7.62-20.83 [.30-.82]	123.95 [4.88]	12-14	12-14	07-10	05-10
		222F232	8.89-22.86 [.35-.90]	146.30 [5.76]	16	16-18	10-14	08-12
		222F242	10.16-27.18 [.40-1.07]	172.21 [6.78]	18-20	20	12-18	12-16
		222F253	10.92-29.97 [.43-1.18]	185.16 [7.29]	22	22	18, 20	16-18
		222F263	12.70-36.83 [.50-1.45]	213.61 [8.41]	24-28	24-28	20	18, 20
		222F274	14.99-42.43 [.59-1.69]	224.54 [8.84]	24	32	—	—
		222F285	17.53-61.21 [.69-2.41]	227.33 [8.95]	24-32	32-40	—	—

(continued on next page)

Catalog 1654025
Revised 3-13

www.te.com

Dimensions are shown for reference purposes only. Specifications subject to change.

Dimensions are in millimeters unless otherwise specified.

USA: +1 800 522 6752
Asia Pacific: +86 0 400 820 6015
UK: +44 800 267 666

For additional support numbers please visit www.te.com

Boot Adapter Selection Tables (Continued)

Table 1. Boots (Continued)

Boot Type	Material Dash Number	Part No.	Dimensions: Cable Diameter Range	Dimensions: Length	Fits Adapter Order Number: Solid	Fits Adapter Order Number: Spin Coupling	Fits Adapter Order Number: Entry Size Shielded	Fits Adapter Order Number: Tinel-Lock
Low-profile, Straight	3,4,25 -12, -100	202D211	6.60-15.75 [.26-.62]	105.92 [4.17]	08	08-10	06-07	04-07
		202D221	7.62-19.30 [.30-.76]	121.16 [4.77]	08-10	08-10	08	06-07
		202D232	8.89-22.86 [.35-.90]	138.68 [5.46]	10-12	10-12	10-12	08-10
		202D242	10.16-27.18 [.40-1.07]	159.51 [6.28]	12-14	12-14	12-14	10-12
		202D253	10.92-29.97 [.43-1.18]	177.80 [7.00]	16-18	16-18	16-18	14-16
		202D263	12.70-36.83 [.50-1.45]	203.20 [8.00]	20-22	20-22	18-20	18-20
		202D274	14.99-42.93 [.59-1.69]	203.20 [8.00]	24	28	22-24	22-24
		202D285	18.29-55.88 [.72-2.20]	203.20 [8.00]	28	32-34	28	—
		202D296	20.07-59.69 [.79-2.35]	203.20 [8.00]	—	40	—	—
		202D299	23.37-72.39 [.92-2.85]	203.20 [8.00]	—	44	—	—
Low-profile, 90°	3,4,25 -12, -100	222D211	6.60-15.75 [.26-.62]	105.16 [4.14]	08	08-10	06-07	04-07
		222D221	7.62-19.30 [.30-.76]	123.95 [4.88]	08-10	08-10	08	06-08
		222D232	8.89-22.86 [.35-.90]	146.30 [5.76]	10-12	10-12	10-12	08-10
		222D242	10.16-27.18 [.40-1.07]	172.21 [6.78]	12-14	12-14	12-14	10-12
		222D253	10.92-29.97 [.43-1.18]	185.16 [7.29]	16-18	16-18	16-18	14-16
		222D263	12.70-36.83 [.50-1.45]	213.61 [8.41]	20-22	20-22	18-20	18-20
		222D274	14.99-42.93 [.59-1.69]	224.54 [8.84]	24	28	22-24	22-24
		222D285	18.29-55.88 [.72-2.20]	227.33 [8.95]	28	32-34	28	
		222D296	20.07-59.69 [.79-2.35]	233.43 [9.19]	—	40	—	—
		222D299	23.37-72.39 [.92-2.85]	203.20 [8.00]	—	44	—	—
Bulbous, Straight	3,4,25 -12, -100	202D121	6.10-19.05 [.24-.75]	38.10 [1.50]	—	08	04-05	04-07
		202D132	7.11-23.37 [.28-.92]	54.86 [2.16]	08	10	06-07	06-08
		202D142	7.62-25.15 [.30-.99]	66.80 [2.63]	10	12-14	09-10	07-10
		202D153	8.89-30.48 [.35-1.20]	80.10 [3.15]	12-14	16-18	11-14	10-12
		202D163	10.41-34.29 [.41-1.35]	103.63 [4.08]	16-18	20-22	15-16	14-16
		202D174	10.41-34.29 [.41-1.35]	103.63 [4.08]	16-18	20-22	15-16	14-16
		202D185	20.83-53.34 [.82-2.10]	165.10 [6.50]	—	—	24	24
		202D196	25.91-69.85 [1.02-2.75]	177.80 [7.00]	—	—	—	—
		202K121	6.10-19.05 [.24-.75]	38.10 [1.50]	—	08	04-05	04-07
		202K132	7.11-23.37 [.28-.92]	54.86 [2.16]	08	10	06-07	06-08
		202K142	7.62-25.15 [.30-.99]	66.80 [2.63]	10	12-14	09-10	07-10
		202K153	8.89-30.48 [.35-1.20]	80.10 [3.15]	12-14	16-18	11-14	10-12
		202K163	10.41-34.29 [.41-1.35]	103.63 [4.08]	16-18	20-22	15-16	14-16
		202K174	10.41-34.29 [.41-1.35]	103.63 [4.08]	16-18	20-22	15-16	14-16
		202K185	20.83-53.34 [.82-2.10]	165.10 [6.50]	—	—	24	24
Bulbous, 90°	3,4,25 -12, -100	222D121	6.10-19.05 [.24-.75]	21.34 [0.84]		08	04-05	04-07
		222D132	7.11-23.37 [.28-.92]	33.78 [1.33]	08	10	06-07	05-08
		222D142	7.62-25.15 [.30-.99]	36.58 [1.44]	10	12-14	09-10	08-10
		222D153	8.89-30.48 [.35-1.20]	43.69 [1.72]	12-14	16-18	11-14	10-14
		222D163	10.41-34.29 [.41-1.35]	53.59 [2.11]	16-18	20-22	15-16	14-18
		222D174	16.26-44.96 [.64-1.77]	77.98 [3.07]	20-24	24	18-22	18-22
		222D185	20.83-53.34 [.82-2.10]	97.54 [3.84]	—	—	24	24
		222D196	25.91-69.85 [1.02-2.75]	117.86 [4.64]	—	—	—	—
		222K121	6.10-19.05 [.24-.75]	21.34 [0.84]		08	04-05	04-07
		222K132	7.11-23.37 [.28-.92]	33.78 [1.33]	08	10	06-07	05-08
		222K142	7.62-25.15 [.30-.99]	36.58 [1.44]	10	12-14	09-10	08-10
		222K152	8.89-30.48 [.35-1.20]	43.69 [1.72]	12-14	16-18	11-14	10-14
		222K163	10.41-34.29 [.41-1.35]	53.59 [2.11]	16-18	20-22	15-16	14-18
		222K174	16.26-44.96 [.64-1.77]	77.98 [3.07]	20-24	24	18-22	18-22
		222K185	20.83-53.34 [.82-2.10]	97.54 [3.84]	—	—	24	24

Dimensions are shown for reference purposes only. Specifications subject to change.

Dimensions are in millimeters unless otherwise specified.

USA: +1 800 522 6752
Asia Pacific: +86 0 400 820 6015
UK: +44 800 267 666

For additional support numbers please visit www.te.com

Boot Adapter Selection Tables (Continued)

Table 2. Determining when Shims should be used

Part No.	Cable Range Requiring Shim	Type of Shim
202C611 *	3.81-4.83 [.15-.19]	Tubing
202C621 *	6.35-8.13 [.25-.32]	Tubing
202C632 *	9.65-12.70 [.38-.50]	Tubing
202C632 *	3.30-9.65 [.13-.38]	202E334
202C632 *	14.48-17.53 [.57-.69]	Tubing
202C642 *	9.91-14.48 [.39-.57]	202E346
202C642 *	3.30-9.65 [.13-.38]	202E344
202C642 *	19.30-22.35 [.76-.88]	Tubing
202C653 *	9.91-19.30 [.39-.76]	202E346
202C663	17.53-22.86 [.69-.90]	Tubing
202D211/202F211 †	5.08-6.60 [.20-.26]	Tubing
222D211/222F211 †	5.08-6.60 [.20-.26]	Tubing
202D221/202F221 †	5.84-7.62 [.23-.30]	Tubing
222D221/222F221 †	5.84-7.62 [.23-.30]	Tubing
202D221/202F221 †	5.92 [.233]	Tubing
222D221/222F221 †	5.92 [.233]	Tubing
202D232/202F232 †	6.86-8.89 [.27-.35]	Tubing
222D232/222F232 †	6.86-8.89 [.27-.35]	Tubing
202D242/202F242 †	7.87-10.16 [.31-.40]	Tubing
222D242/222F242 †	3.30-7.87 [.13-.31]	202E334
202D253/202F253 †	8.38-10.92 [.33-.43]	Tubing
222D253/222F253 †	3.30-8.38 [.13-.33]	202E334
202D263/202F263	9.65-12.70 [.38-.50]	Tubing
222D263/222F263	3.30-9.65 [.13-.38]	202E334
202D274/202F274	11.43-14.99 [.45-.59]	Tubing
222D274/222F274	9.91-11.43 [.39-.45]	202E346
222D274/222F274	3.30-9.65 [.13-.38]	202E344
222D274/222F274	13.46-17.53 [.53-.69]	Tubing
222D285/222F285	9.91-13.46 [.39-.53]	202E346
222D285/222F285	3.30-9.65 [.13-.38]	202E344
222D1XD/222D1XX	—	Use tubing as a shim if necessary

* These ranges also apply to the 202G6XX series of boots.
† These ranges also apply to the 202G2XX series of boots.

Catalog 1654025
Revised 3-13

www.te.com

Dimensions are shown for reference purposes only. Specifications subject to change.

Dimensions are in millimeters unless otherwise specified.

USA: +1 800 522 6752
Asia Pacific: +86 0 400 820 6015
UK: +44 800 267 666

For additional support numbers please visit www.te.com

Material Selection Table

Applications

TE offers Raychem brand products in a variety of materials to enable designers and material specifiers to obtain optimum performance.

Material*	Characteristics
-3 Molded Part Material	A general purpose, heat-shrinkable semi rigid and flame retarded polyolefin molding compound with good resistance to fluids and heat. -3 molded parts are ideal for use in applications where toughness combined with resistance to occasional exposure to fluids or heat is required. -3 molded parts are recommended for use in System 10.
-3S Molded Part Material	A general purpose, heat-shrinkable flame retarded, polyolefin compound used to make shielded molded parts.-3S molded parts form part of the Rayaten shielding system and are ideal for use in applications where toughness combined with resistance to occasional exposure to fluids or heat is required. -3S molded parts are recommended for use in System 10.
-4 Molded Part Material	A general purpose, heat-shrinkable flexible and flame retarded polyolefin molding compound with good resistance to fluids and heat. -4 molded parts are ideal for use in applications where toughness combined with resistance to occasional exposure to fluids or heat is required. -4 molded parts are recommended for use in System 10.
-6 Molded Part Material	Designed for use in applications where extreme flexibility is required. The parts provide excellent strain relief and sealing over a broad temperature range and remain flexible at very low temperatures. The standard color is black.
-8 Molded Part Material	For use in outer space, where use of low outgassing components is required. The parts provide excellent strain relief at connector cable terminations. Please contact TE for available shapes. The standard color is black.
-12 Molded Part Material	A high temperature, heat-shrinkable, flexible, flame retarded, fluoroelastomeric molding compound with excellent resistance to long term fluid immersion and heat exposure. A wide range of shapes are available in this material. -12 molded parts are recommended for use in System 200.
-25 Molded Part Material	A heat-shrinkable, semi rigid, fluid and temperature resistant, elastomeric molding compound, designed to offer excellent performance in harsh environments. Ideal for use in military vehicles where high temperatures and long term exposure to hot fluids is expected. A wide range of shapes are available in this material. -25 molded parts are recommended for use in System 25.
-25S Molded Part Material	A heat-shrinkable, semi rigid, fluid and temperature resistant, elastomeric compound, used to make shielded molded parts. -25S molded parts form part of the Rayaten shielding system and are ideal for use in military vehicles where high temperatures and long term exposure to hot fluids is expected. -25S molded parts are recommended for use in System 25.
-50 Molded Part Material	A heat-shrinkable, highly flexible, fluid and temperature resistant, VPB molding compound, ideal for use in general purpose and high temperature military applications where exposure to petroleum based solvents is expected. Uniboots and a wide range of low profile shapes are available in this material. -50 molded parts are recommended for use in System 30.
-51 Molded Part Material	A heat-shrinkable, rugged, flexible, fluid and temperature resistant, EPB molding compound, ideal for use in general purpose applications where exposure to petroleum based solvents is expected. Uniboots and a wide range of low profile shapes are available in this material. -51 molded parts are recommended for use in System 20.
-55 Molded Part Material	A heat-shrinkable, flexible, flame retarded, fluid and high temperature resistant, modified fluoropolymer molding compound. A wide range of shapes is available. -55 molded parts are recommended for use in System 300.
-71 Molded Part Material	A heat-shrinkable, flexible, fluid and temperature resistant, polyolefin molding compound, ideal for use in general purpose applications where a good balance of fluid and heat resistance properties is required. Uniboots and a wide range of low profile shapes are available. -71 molded parts are suitable for use in System 10.
-100 Molded Part Material	A heat-shrinkable, semi flexible, low fire hazard molding compound designed to offer excellent fire safety characteristics combined with low smoke and low acid gas emission -100 also exhibits good mechanical and fluid resistance properties. A wide range of shapes are available in this material. -100 molded parts are recommended for use in System 100.
-100S Molded Part Material	A heat-shrinkable, semi flexible, low fire hazard compound used to make shielded molded parts. 100S molded parts form part of the Rayaten shielding system and are designed to offer excellent fire safety characteristics combined with low smoke and low acid gas emission. -100S also exhibits good mechanical and fluid resistance properties. -100S molded parts are recommended for use in System 100.
-125 Molded Part Material	A heat-shrinkable, flame retarded, fluid and high temperature resistant, modified fluoropolymer molding compound. A range of shapes are available. -125 molded parts are recommended for use in System 300.
-130 Molded Part Material	Non flame-retarded molded material. Low shrink temperature.
-770 Molded Part Material	NBCCS resistant material rated to 125˚C, Part of System 770.
-780 Molded Part Material	NBCCS resistant material rated to 175˚C, Part of System 780.
-790 Molded Part Material	NBCCS resistant material rated to 200˚C, Part of System 790.

*Check with specific part page for applicable materials.

-3

Semi-Rigid Modified Polyolefin

Product Facts

- Heat-shrinkable
- Semi-Rigid
- Flame Retardant
- Good resistance to fluids and heat

Applications

TE molded parts in -3 material are designed for use in general harnessing applications where toughness is required and systems are occasionally exposed to fluids or heat. The adhesive-lined parts provide excellent sealing and strain relief at connector-cable terminations and transitions. A wide range of shapes are available in this material. The standard color is black.

Installation

-3 molded parts will shrink on the application of heat above 125°C [257°F].

Recommended installation temperature: 150°C [302°F]

Operating Temperature Range

-55°C to 135°C
[-67°F to 275°F]

Available in:	Americas	Europe	Asia Pacific
	■	■	■

Catalog 1654025
Revised 3-13

www.te.com

Dimensions are shown for reference purposes only. Specifications subject to change.

Dimensions are in millimeters unless otherwise specified.

USA: +1 800 522 6752
Asia Pacific: +86 0 400 820 6015
UK: +44 800 267 666

For additional support numbers please visit www.te.com

-3 (Continued)

Specifications/Approvals

UL	Military	TE
224, File E85381	SAE-AS81765/1, Type I Def. Stan. 59-97 Issue 3 Type DA (Europe) BS-G-198-5-DA (Europe)	RT-301
—	SAE-AS85049/ 140, 141, 142 (material designator A)	—

Product Characteristics

		Specification Requirements	Test Method
Physical	Tensile strength	10.5 MPa (min.)	ISO 37; ASTM D 412
	Ultimate elongation	250% (min.)	ISO 37; ASTM D 412
	2% secant modulus	80–160 MPa	ASTM D 882
	Specific gravity	1.4 (max.)	ISO 1183; ASTM D 792
Thermal	Heat aging for 168 h at 175°C [347°F]	Ultimate elongation 150% (min.)	ISO 188, ISO 37
	Heat shock for 4 h at 225°C [437°F]	No dripping, cracking, or flowing	ASTM D 2671
	Low-temperature flex at -55°C [-67°F]	No cracking during mandrel bend	RK-6703, CL 2.7: RT-301 Sec. 4.3.4
	Flammability	Self-extinguishing	RK-6703, CL 2.8: ASTM D 635
Electrical	Electric strength	8 MV/m (min.)	IEC 243
Water absorption	—	0.5% (max.)	ISO 62
Fluid resistance	Aviation fuel F40	Tensile strength 8.5 MPa (min.) Ultimate elongation 200% (min.)	ISO 1817 and ISO 37 after immersion for 24 h at 23°C [73°F]
	Lubricating oil O-149	Tensile strength 8.5 MPa (min.) Ultimate elongation 200% (min.)	ISO 1817 and ISO 37 after immersion for 24 h at 23°C [73°F]
	Phosphate ester hydraulic fluid (DTD 900/4881A)	Tensile strength 8.5 MPa (min.) Ultimate elongation 200% (min.)	ISO 1817 and ISO 37 after immersion for 24 h at 23°C [73°F]

Dimensions are shown for reference purposes only. Specifications subject to change.

Dimensions are in millimeters unless otherwise specified.

USA: +1 800 522 6752
Asia Pacific: +86 0 400 820 6015
UK: +44 800 267 666

For additional support numbers please visit www.te.com

-4

Flexible Polyolefin

Product Facts

- Heat-shrinkable
- Flexible
- Flame Retardant
- Good resistance to fluids and heat

Applications

TE molded parts in -4 material are designed for use in general harnessing applications where toughness is required and systems are occasionally exposed tofluids or heat. The adhesive-lined parts provide excellent sealing and strain relief at connector-cable terminations and transitions.

A wide range of shapes are available in this material. The standard color is black.

Installation

-4 molded parts will shrink on the application of heat above 100°C [212°F].

Recommended installation temperature: 150°C [302°F]

Operating Temperature Range

-55°C to 135°C
[-67°F to 275°F]

Available in:	Americas	Europe	Asia Pacific
	■	■	■

Catalog 1654025
Revised 3-13

www.te.com

Dimensions are shown for reference purposes only. Specifications subject to change.

Dimensions are in millimeters unless otherwise specified.

USA: +1 800 522 6752
Asia Pacific: +86 0 400 820 6015
UK: +44 800 267 666

For additional support numbers please visit www.te.com

-4 (Continued)

Specifications/Approvals

UL	Military	TE
224, File E85381	SAE-AS81765/1, Type II	RT-1304
—	SAE-AS85049/ 140, 141, 142 (material designator B)	—

Product Characteristics

		Specification Requirements	Test Method
Physical	Tensile strength	1800 psi (min.)	ASTM D 412
	Ultimate elongation	400% (min.)	ASTM D 412
	Specific gravity	1.3 (max.)	ASTM D 792
Thermal	Heat aging for 168 h at 175°C [347°F]	Ultimate elongation 300% (min.)	RT 1304 Sec. 4.3.3
	Heat shock for 4 h at 225°C [437°F]	No dripping, flowing, or cracking	RT 1304 Sec. 4.3.5
	Low-temperature flex at -55°C [-67°F]	No cracking	RT 1304 Sec. 4.3.4
	Flammability (burn time)	Average flame time: 120 s (max.)	ASTM D 635
Electrical	Dielectric strength	350 V/mil (min.)	ASTM D 149
Water absorption	—	0.3% (max.)	ASTM D 570
Fluid resistance	JP-4 fuel, aviation gasoline, water, hydraulic fluid	Tensile strength 8.5 MPa psi (min.) Ultimate elongation 200% (min.)	RT-1304 Sec. 4.3.3

-12

Modified Fluoroelastomer

Product Facts

- **Heat-shrinkable, flexible, fluid-resistant modified fluoro-elastomer**
- **Excellent resistance to long-term fuel immersion**

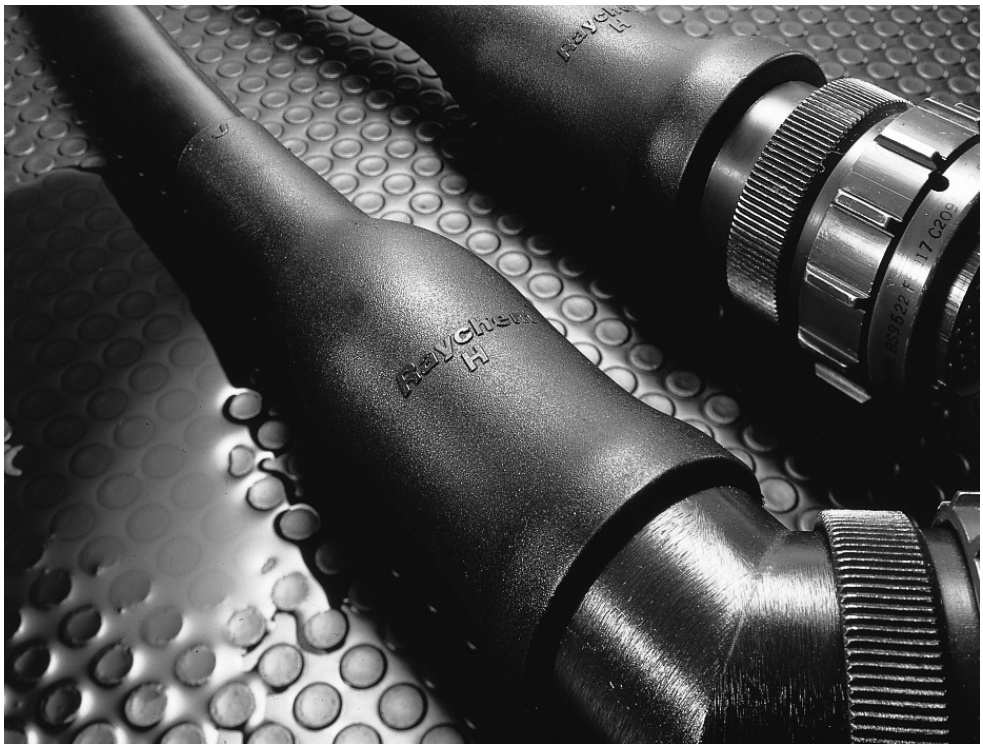

Applications

TE -12 molded parts with fluoroelastomers are designed to be used in conjunction with tubing made from fluoroelastomers or multi-conductor cable jackets and a suitable adhesive in System 200.

This system provides excellent resistance to elevated temperatures and continuous fuel immersion. Available in a wide range of configurations, -12 molded parts will operate from -55°C [-67°F] to 200°C [392°F]. The standard color is black.

Installation

-12 molded parts will shrink on the application of heat above 175°C [347°F].

Recommended installation temperature: 220°C [428°F]

Operating Temperature Range

-55°C to 200°C
[-67°F to 392°F]

Available in:	Americas	Europe	Asia Pacific
	■	■	■

Catalog 1654025
Revised 3-13

www.te.com

Dimensions are shown for reference purposes only. Specifications subject to change.

Dimensions are in millimeters unless otherwise specified.

USA: +1 800 522 6752
Asia Pacific: +86 0 400 820 6015
UK: +44 800 267 666

For additional support numbers please visit www.te.com

-12 (Continued)

Specifications/Approvals

Military	TE
SAE-AS81765/4	RT-1312
Def. Stan. 59-97 Issue 3 Type DD (Europe)	—
BS-G-198-5-DD-P (Europe)	—
SAE-AS85049/ 140, 141, 142 (material designator D)	—

Product Characteristics

		Specification Requirements	Test Method
Physical	Tensile strength	12.4 MPa (min.)	ISO 37
	Ultimate elongation	300% (min.)	ISO 37
	2% secant modulus	70 MPa (max.)	ASTM D 882
	Specific gravity	1.95 (max.)	ISO 1183
Thermal	Heat aging for 168 h at 250°C [482°F]	Ultimate elongation 250% (min.)	ISO 188, ISO 37
	Heat shock for 4 h at 300°C [572°F]	No dripping, cracking, or flowing	ASTM D 2671
	Low temperature flex at -55°C [-67°F]	No cracking	ASTM D 2671
	Flammability (burn time)	30 s (max.)	ASTM D 635
Electrical	Electric strength	8 MV/m (min).	IEC 243
Water absorption	—	0.5% (max.)	ISO 62
Fluid resistance	Aviation fuel F40	Tensile strength 11 MPa (min.) Ultimate elongation 200% (min.)	ISO 1817 after immersion for 24 h at 23°C [73°F]
	Lubricating oil O-149	Tensile strength 11 MPa (min.) Ultimate elongation 200% (min.)	ISO 1817 after immersion for 24 h at 93°C [200°F]
	Hydraulic fluid H515	Tensile strength 11 MPa (min.) Ultimate elongation 200% (min.)	ISO 1817 after immersion for 24 h at 93°C [200°F]

Dimensions are shown for reference purposes only. Specifications subject to change.

Dimensions are in millimeters unless otherwise specified.

USA: +1 800 522 6752
Asia Pacific: +86 0 400 820 6015
UK: +44 800 267 666

For additional support numbers please visit www.te.com

-25

Fluid-Resistant Modified Elastomer

Product Facts

- **Heat-shrinkable, semi-rigid, chemical- and abrasion-resistant molded shapes**
- **Excellent resistance to high-temperature fluids**
- **Resistance to long-term exposure at elevated temperatures**

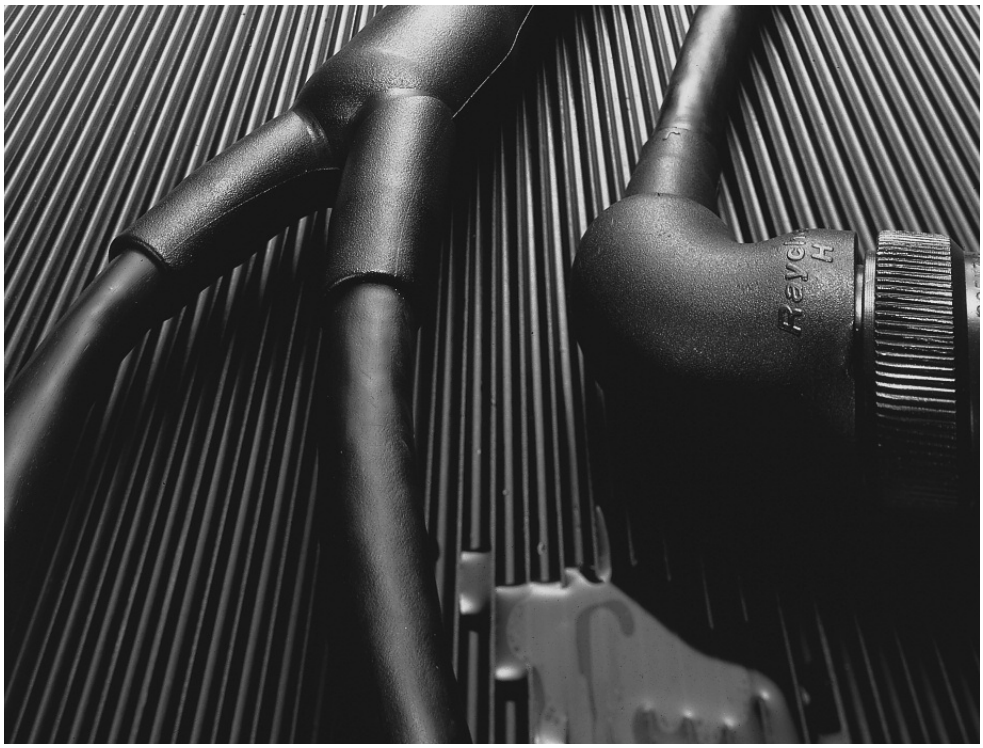

Applications

TE heat-shrinkable molded parts in -25 material are designed to be used in conjunction with other System 25 components such as DR-25 tubing and S1125 adhesive, providing a complete cable harness system capability.

-25 parts have been specifically formulated and designed to provide optimum high-temperature fluid resistance and long-term heat resistance. This unique balance of properties makes -25 parts particularly suitable for sealing and strain relief at connector-cable terminations and cable-to-cable transitions on military vehicle cables and harnesses. Available in a wide range of configurations, -25 parts will operate from -75°C to 150°C [-103°F to 302°F] for long periods. The standard color is black.

Installation

-25 molded parts will shrink on the application of heat above 135°C [275°F].

Recommended installation temperature: 175°C [347°F]

Operating Temperature Range

-75°C to 150°C
[-103°F to 302°F]

Available in:	Americas	Europe	Asia Pacific
	■	■	■

Catalog 1654025
Revised 3-13

www.te.com

Dimensions are shown for reference purposes only. Specifications subject to change.

Dimensions are in millimeters unless otherwise specified.

USA: +1 800 522 6752
Asia Pacific: +86 0 400 820 6015
UK: +44 800 267 666

For additional support numbers please visit www.te.com

-25 (Continued)

Specifications/Approvals

Military	TE
VG95343 Parts 6, 7, 8 and 9 (Europe)	RW-2070
Def Stan 59-97, Issue 3, Type DE (Europe)	—
BSG-198-5-DE-P	—
SAE-AS85049/ 140, 141, 142 (material designator H)	—

Product Characteristics

		Specification Requirements	Test Method
Physical	Tensile strength	15 MPa (min.)	ASTM D 412
	Ultimate elongation	350% (min.)	ASTM D 412
	Specific gravity	1.5 (max.)	ASTM D 792
Thermal	Heat aging for 168 h at 150°C [302°F	Ultimate elongation 300% (min.)	ASTM D 412
	Heat shock for 4 h at 225°C [437°F]	No dripping, cracking, or flowing	ASTM D 2671
	Low-temperature flex for 4 h at -70°C [-94°F]	No cracking during mandrel bend	ASTM D 2671
	Flammability (burn time)	120 s (max.)	ASTM D 635
Electrical	Electric strength	8 MV/m	ASTM D 149
Fluid resistance	Aviation fuel JP-4 (MIL-T-5624)	Tensile strength 12 MPa (min.) Ultimate elongation 300% (min.)	ASTM D 412 after immersion for 24 h at 25°C [77°F]
	Hydraulic fluid (MIL-H-6083)	Tensile strength 12 MPa (min.) Ultimate elongation 300% (min.)	ASTM D 412 after immersion for 24 h at 25°C [77°F]
	Diesel fuel (VV-F-800 No 2)	Tensile strength 12 MPa (min.) Ultimate elongation 300% (min.)	ASTM D 412 after immersion for 24 h at 50°C [122°F]
	Automotive gasoline (MIL-G-3056)	Tensile strength 12 MPa (min.) Ultimate elongation 300% (min.)	ASTM D 412 after immersion for 24 h at 25°C [77°F]

Dimensions are shown for reference purposes only. Specifications subject to change.

Dimensions are in millimeters unless otherwise specified.

USA: +1 800 522 6752
Asia Pacific: +86 0 400 820 6015
UK: +44 800 267 666

For additional support numbers please visit www.te.com

-25S

Fluid-Resistant Screened Elastomer

Product Facts

- Fuel and heat resistance
- RFI, EMI protection

Applications

Rayaten screened molded parts in -25S material are designed for use with FDR-25 or DR-25 jacketed screened multiconductor cable and S1125 adhesive to provide a complete high-performance harness system offering high levels of RFI and EMI protection. This -25 material provides optimum high-temperature fluid-resistance and long-term heat-aging properties. The material is particularly suitable for providing encapsulation, mechanical protection, and strain relief on terminations and cable transitions in harsh environments.The standard color is black. Products made from this material are normally used in an assembly (see section 7).

Operating Temperature Range

-55°C to 150°C
[-67°F to 302°F]

Available in:	Americas	Europe	Asia Pacific
	■	■	■

Catalog 1654025
Revised 3-13

www.te.com

Dimensions are shown for reference purposes only. Specifications subject to change.

Dimensions are in millimeters unless otherwise specified.

USA: +1 800 522 6752
Asia Pacific: +86 0 400 820 6015
UK: +44 800 267 666

For additional support numbers please visit www.te.com

-25S (Continued)

Specifications/Approvals

Military	TE
VG 95343 Pt. 20, Pt. 22	RW-2077

Product Characteristics

		Specification Requirements*	Screening effectiveness in dB at 3 KHz to 30 MHz (min.)	Screening effectiveness in dB at >30 MHz to 100 MHz (min.)
Initial values		Tensile strength: 12 MPa (min.)	—	—
		Ultimate elongation: 400% (min.)	—	—
		Metal adhesion: 15 N/cm (min.)	—	—
		Shielding effectiveness	75	70
Thermal	Heat shock (1/2 h at 200°C [392°F])	Tensile strength: 12 MPa (min.)	—	—
		Ultimate elongation: 400% (min.)	—	—
		Shielding effectiveness	75	70
	Heat aging (168 h at 160°C [320°F])	Tensile strength: 12 MPa (min.)	—	—
		Ultimate elongation: 400% (min.)	—	—
		Shielding effectiveness	75	70
	3 thermal cycles of -75°C to 150°C [-103°F to 302°F]	Shielding effectiveness	75	70
Immersion in the following fluids for 24 h:				
Chemical	Lubricating oil (O-156, at 100°C [212°F])	Tensile strength: 10 MPa (min.)	—	—
		Ultimate elongation: 300% (min.)	—	—
		Shielding effectiveness	75	70
	Hydraulic fluid H515, at 50°C [122°F]	Tensile strength: 10 MPa (min.)	—	—
		Ultimate elongation: 300% (min.)	—	—
		Shielding effectiveness	75	70
	Aviation fuel JP4 F40, at 23°C [73°F]	Tensile strength: 10 MPa (min.)	—	—
		Ultimate elongation: 300% (min.)	—	—
		Shielding effectiveness	75	70
	Diesel fuel F54, at 23°C [73°F]	Tensile strength: 10 MPa (min.)	—	—
		Ultimate elongation: 300% (min.)	—	—
		Shielding effectiveness	75	70
	1, 1, 1, trichloroethane (1 h, at 23°C [73°F])	Tensile strength: 10 MPa (min.)	—	—
		Ultimate elongation: 300% (min.)	—	—
		Shielding effectiveness	75	70

*Values quoted are for the polymer/metal composite in all cases when terminated using epoxy adhesives.

-50

Fluid-Resistant Modified Elastomer

Product Facts

- Excellent heat and fluid resistance
- Low profile
- Rugged
- Lightweight

Applications

A high-performance blend of fluoroelastomers and other polymers, TE -50 material offers excellent fluid and temperature resistance. It is suitable for use in most areas of military vehicle harnessing. This material is available in the Uniboot shape and should be chosen in applications that use System 30 components. The standard color is black.

Installation

-50 molded parts will shrink on the application of heat above 150°C [302°F].

Recommended installation temperature is 175°C [347°F]

Operating Temperature Range

-55°C to 150°C
[-67°F to 302°F]

Available in:	Americas	Europe	Asia Pacific
	■	■	■

Catalog 1654025
Revised 3-13

www.te.com

Dimensions are shown for reference purposes only. Specifications subject to change.

Dimensions are in millimeters unless otherwise specified.

USA: +1 800 522 6752
Asia Pacific: +86 0 400 820 6015
UK: +44 800 267 666

For additional support numbers please visit www.te.com

-50 (Continued)

Specifications/Approvals

Specification	TE
SC-X-15111 (U.S.)	RT-1313

Product Characteristics

		Specification Requirements	Test Method
Physical	Tensile strength	15 MPa (min.)	ASTM D 412
	Ultimate elongation	350% (min.)	ASTM D 412
	Specific gravity	1.5 (max.)	ASTM D 792
Thermal	Heat aging for 168 h at 150°C [302°F]	Ultimate elongation 300% (min.)	ASTM D 412
	Heat shock for 4 h at 225°C [437°F]	No dripping, cracking, or flowing	ASTM D 2671
	Low-temperature flex for 4 h at -70°C [-94°F]	No cracking during mandrel bend	ASTM D 2671
	Flammability (burn time)	120 s (max.)	ASTM D 635
Electrical	Electric strength	8 MV/m	ASTM D 149
Fluid resistance	Aviation fuel JP-4 (MIL-T-5624)	Tensile strength 12 MPa (min.) Ultimate elongation 300% (min.)	ASTM D 412 after immersion for 24 h at 25°C [77°F]
	Hydraulic fluid (MIL-H-6083)	Tensile strength 12 MPa (min.) Ultimate elongation 300% (min.)	ASTM D 412 after immersion for 24 h at 25°C [77°F]
	Diesel fuel (VV-F-800 No 2)	Tensile strength 12 MPa (min.) Ultimate elongation 300% (min.)	ASTM D 412 after immersion for 24 h at 50°C [122°F]
	Automotive gasoline (MIL-G-3056)	Tensile strength 12 MPa (min.) Ultimate elongation 300% (min.)	ASTM D 412 after immersion for 24 h at 25°C [77°F]

-51

Chemical-Resistant Fluoroelastomer

Product Facts

- Excellent fuel resistance
- Low profile
- Rugged
- Lightweight

Applications

A high-performance elastomeric blend of polymers, TE -51 material offers excellent fluid resistance.

It is suitable for use in most areas of military vehicle harnessing. This material is available in the Uniboot range and other slimline boots and transitions. The standard color is black.

Installation

-51 molded parts will shrink on the application of heat above 135°C [275°F].

Recommended installation temperature is 150°C [302°F]

Operating Temperature Range

-55°C to 135°C
[-67°F to 275°F]

Available in:	Americas	Europe	Asia Pacific
	■	■	■

Catalog 1654025
Revised 3-13

www.te.com

Dimensions are shown for reference purposes only. Specifications subject to change.

Dimensions are in millimeters unless otherwise specified.

USA: +1 800 522 6752
Asia Pacific: +86 0 400 820 6015
UK: +44 800 267 666

For additional support numbers please visit www.te.com

-51 (Continued)

Specifications/Approvals

Specification	TE
SC-X-15112 (U.S.)	RT-1321

Product Characteristics

		Specification Requirements	Test Method
Physical	Tensile strength	1500 psi (min.)	ASTM D 412
	Ultimate elongation	300% (min.)	ASTM D 412
	Specific gravity	1.6 (max.)	ASTM D 792
Thermal	Heat aging for 168 h at 121°C [250°F]	Tensile strength 1200 psi. (min.) Elongation 250% (min.)	RT-1321 Sec. 4.3.3 RT-1321 Sec. 4.3.3
	Heat shock for 4 h at 200°C [392°F]	No dripping, flowing, or cracking	RT-1321 Sec. 4.3.5
	Low-temperature flex for 4 h at -55°C [-67°F]	No cracking	RT-1321 Sec. 4.3.4
	Flammability (burn time)	120 seconds, 1 inch (max.)	ASTM D 635
Electrical	Dielectric strength	200 V/mil (min.)	ASTM D 149
Fluid resistance	Lubricating oil, diesel oil, water for 24 h at 25°C [77°F]	Tensile strength 1000 psi (min.) Elongation 225% (min.) Weight increase 10% (max.)	RT-1321 Sec. 4.3.3 and 4.3.7
	Gasoline for 24 h at 25°C [77°F]	Tensile strength 800 psi (min.) Elongation 225% (min.) Weight increase 25% (max.)	RT-1321 Sec. 4.3.3 and 4.3.7
	Isopropyl alcohol, cleaning fluid for 24 h at 25°C 77°F]	Tensile strength 1400 psi (min.) Elongation 225% (min.) Weight increase 10% (max.)	RT-1321 Sec. 4.3.3 and 4.3.7
	Hydraulic fluid for 24 h at 71°C [160°F]	Tensile strength 1000 psi (min.) Elongation 225% (min.) Weight increase 25% (max.)	RT-1321 Sec. 4.3.3 and 4.3.7

-55

Flexible Fluoropolymer

Product Facts

- **Flame retardant**
- **Abrasion and cut through resistance**
- **Flexible**
- **High temperature resistance**
- **High fluid resistance**
- **Environmentally sealed**

Applications

A heat-shrinkable, flexible, flame retardant, fluid and high temperature resistant, modified fluoropolymer molding compound. -55 molded parts are ideal for use in applications where chemical resistance and abrasion resistance is required. A wide range of shapes are available. -55 molded parts are recommended for use in System 300.

Use the System 300 family of parts in military and industrial applications where excellent high temperature performance and good physical and chemical properties are a requirement.

System 300 jacketing is based on a modified fluoropolymer and features a one part epoxy adhesive in tape form.

Installation

This specification covers the requirements for one type of flexible, electrical insulating molded component whose expanded dimensions will reduce to a predetermined size upon the application of heat in excess of 220°C [428°F].

Operating Temperature Range

-65°C to 200°C
[-85°f to 392°F]

Specifications/Approvals

RT-1330

Product Characteristics

Physical	Tensile Strength	psi (MPa)	3500 minimum (24.1)	Section 4.3.3
	Ultimate Elongation	percent	200 minimum	ASTM D 2671
	Specific Gravity	—	2.0 maximum	ASTM D 792
	Low Temperature Flexibility 4 hours at -65 ± 2°C [-85 ± 4°F]	—	No cracking	Section 4.3.4
	Heat Shock 4 hours at 300°C [572°F]	—	No dripping, flowing or cracking	Section 4.3.5
	Heat Resistance 336 hours at 250°C [482°F]	—	—	Section 4.3.6
	Followed by tests for: Tensile Strength Elongation	 psi (MPa) percent	 2000 minimum (13.8) 150 minimum	 Section 4.3.3 ASTM D 2671

Available in:	Americas	Europe	Asia Pacific
	■	■	■

Catalog 1654025
Revised 3-13

www.te.com

Dimensions are shown for reference purposes only. Specifications subject to change.

Dimensions are in millimeters unless otherwise specified.

USA: +1 800 522 6752
Asia Pacific: +86 0 400 820 6015
UK: +44 800 267 666

For additional support numbers please visit www.te.com

-55 (Continued)

Product Characteristics
(Continued)

Electrical			
Dielectric Strength	volts/mil	200 minimum	ASTM D 149
Volume Resistivity	ohm-cm	1011 minimum	ASTM D 257
Chemical			
Corrosive Effect 16 hours at 200 ± 3°C [392 ± 5°F]	—	Noncorrosive	Section 4.3.7 ASTM D 2671 Procedure A
Flammability Average Time of Burning Average Extent of Burning	 seconds inches (mm)	 15 maximum 0.5 maximum (12.5)	ASTM D 635
Fungus Resistance	—	Rating of 1 or less	ASTM G 21
Water Absorption 24 hours at 23 ± 3°C [73 ± 5°F)]	percent	0.5 maximum	ASTM D 570
Fluid Resistance 24 hours at 23 ± 3°C [73 ± 5°F] in: Gasoline, Aviation Grade 100 (ASTM D 910) 1,1,1 Trichloroethane (MIL-T-81533) Coolanol 25 Followed by tests for:	—	—	Section 4.3.8
Tensile Strength Ultimate Elongation	psi (MPa) percent	3000 minimum (20.7) 150 minimum	Section 4.3.3 ASTM D 2671
24 hours at 50 ± 3°C [122 ± 5°F] in: JP-5 (MIL-T-5624) Deicing Fluid (MIL-A-8243) Cleaning Compound (MIL-C-43616) 5% Salt Solution (O-S-1926) Fuel Oil, Diesel (VV-F-800, DF-2) Followed by tests for:			
Tensile Strength Ultimate Elongation	psi (MPa) percent	3000 minimum (20.7) 150 minimum	Section 4.3.3 ASTM D 2671
24 hours at 75 ± 3°C [167 ± 5°F] in: Hydraulic Fluid (MIL-H-5606) Skydrol® 500 Lubricating Oil (MIL-L-2104) Lubricating Oil (MIL-L-7808) Followed by tests for:	—	—	Section 4.3.8
Tensile Strength Ultimate Elongation	psi (MPa) percent	3000 minimum (20.7) 150 minimum	Section 4,3.3 ASTM D 2671
Fluid Resistance 5 hours at 23 ± 3°C [73± 5°F]	—	—	Section 4.3.8
Tensile Strength Ultimate Elongation	psi (MPa) Percent	3500 minimum (24.1) 150 minimum	Section 4.3.3 ASTM D 2671
Nuclear			Section 4.3.9
Radiation Resistance Followed by tests for: Tensile Strength Ultimate Elongation	 psi (MPa) percent	 3500 minimum (24.1) 150 minimum	—

-71

Semirigid Modified Polyolefin

Product Facts

- Flexible
- Flame-retardant

Applications

TE -71 material is a flexible, flame-retardant polyolefin suitable for use in general harnessing applications. The material is very flexible and offers a good balance of fluid and heat resistance. If Uniboot molded parts are required, -71 should be chosen as a replacement for -4. The standard color is black.

Installation

-71 molded parts will shrink on the application of heat above 125°C [257°F].

Recommended installation temperature is 150°C [302°F]

Operating Temperature Range

-55°C to 135°C
-67°F to 275°F]

Available in:	Americas	Europe	Asia Pacific
	■	■	■

Catalog 1654025
Revised 3-13

www.te.com

Dimensions are shown for reference purposes only. Specifications subject to change.

Dimensions are in millimeters unless otherwise specified.

USA: +1 800 522 6752
Asia Pacific: +86 0 400 820 6015
UK: +44 800 267 666

For additional support numbers please visit www.te.com

-71 (Continued)

Specifications/Approvals

Military	TE
SAE-AS81765/1, Type II	RT-1316

Product Characteristics

		Specification Requirements	Test Method
Physical	Tensile strength	10 MPa (min.)	ASTM D 412
	Ultimate elongation	250% (min.)	ASTM D 412
	Specific gravity	1.40 (max.)	ASTM D 792
Thermal	Heat aging for 168 hr at 175°C [347°F]	Ultimate elongation 200% (min.)	ASTM D 412
	Heat shock for 4 h at 250°C [482°F]	No dripping, cracking, or flowing	ASTM D 2671
	Low-temperature flex for 4 h at -55°C [-67°F]	No cracking during mandrel bend	ASTM D 2671
	Flammability (burn time)	90 s (max.)	ASTM D 635
Electrical	Electric strength	8 MV/m	ASTM D 149
Water absorption	—	0.5% (max.)	ASTM D 570
Fluid resistance	Aviation fuel JP-4 (MIL-T-5624)	Tensile strength 5 MPa (min.) Ultimate elongation 200% (min.)	ASTM D 412 after immersion for 24 h at 25°C [77°F]
	Lubricating oil O-149 (MIL-L-7808)	Tensile strength 5 MPa (min.) Ultimate elongation 200% (min.)	ASTM D 412 after immersion for 24 h at 25°C [77°F]
	Hydraulic fluid (MIL-H-5606)	Tensile strength 5 MPa (min.) Ultimate elongation 200% (min.)	ASTM D 412 after immersion for 24 h at 25°C [77°F]
	Skydrol® 500	Tensile strength 5 MPa (min.) Ultimate elongation 200% (min.)	ASTM D 412 after immersion for 24 h at 25°C [77°F]

-100

Low-Fire-Hazard Material

Product Facts

- **Heat-shrinkable, semiflexible molded shapes for low fire hazard applications**
- **Low-smoke index as defined by BS G 198 Part 5**
- **Low-toxicity index as defined by NES 713**
- **High-temperature index as defined by ISO 4589-3**

Applications

TE heat-shrinkable molded parts in -100 material form part of System 100. The molded parts are designed for use in conjunction with Zerohal cable and tubing for applications where hazard reduction in the event of fire is crucial. The material exhibits excellent fire safety characteristics combined with low-smoke and low-acid-gas emission while retaining good mechanical and fluid-resistant properties. -100 parts with adhesive lining provide location, sealing, and strain relief of cable-connector terminations and cable–cable transitions on harnesses used where there is a need to lower the risk (such as in marine applications, mass transit systems, and offshore installations), or where equipment would be irreparably damaged by the corrosive products of combustion. Available in a wide range of configurations, -100 parts will operate continuously from -30°C to 105°C [-22°F to 221°F]. The standard color is black.

Installation

-100 molded parts will shrink on the application of heat above 120°C [248°F].

Recommended installation temperature: 150°C [302°F]

Operating Temperature Range

-30°C to 105°C
[-22°F to 221°F]

Available in:	Americas	Europe	Asia Pacific
	■	■	■

Catalog 1654025
Revised 3-13

www.te.com

Dimensions are shown for reference purposes only. Specifications subject to change.

Dimensions are in millimeters unless otherwise specified.

USA: +1 800 522 6752
Asia Pacific: +86 0 400 820 6015
UK: +44 800 267 666

For additional support numbers please visit www.te.com

-100 (Continued)

Specifications/Approvals

Military/NAVSEA	TE
5617649 (U.S.)	RW-2082
Def. Stan 59-97, Issue 3, Type DF (Europe)	—
BSG 198 Part 5 Type DF (Europe)	—
BR1326 listed Class C	—
VG95343 Part 29 & 30	
SAE-AS85049/ 140, 141, 142 (material designator G)	

Product Characteristics

		Specification Requirements	Test Method
Physical	Tensile strength	8 MPa (min.)	ISO 37
	Ultimate elongation	200% (min.)	ISO 37
	2% secant modulus	130 MPa (max.)	ASTM D 882
	Specific gravity	1.5 (max.)	ISO 1183
Thermal	Heat aging for 168 h at 150°C [302°F]	Ultimate elongation 100% (min.)	ISO 188, ISO 37
	Heat shock for 4 h at 225°C [437°F]	No dripping, cracking, or flowing	ASTM D 2671
	Low-temperature flex at -30°C [-22°F]	No cracking during mandrel bend	ASTM D 2671
Fire safety properties	Limiting oxygen index	29 min.	ISO 4589-2
	Temperature index	250°C [482°F] (min.)	ISO 4589-3
	Flammability (burn time)	100 s (max.)	ASTM D 635
	Smoke index	20 (max.)	BSG 198 Part 5
	Toxicity index	5 (max.) per 100 g	NES 713
Electrical	Electric strength	15 MV/m (min.)	IEC 243
Water absorption	—	0.75% (max.) at 23°C [73°F] 3.5% (max.) at 70°C [158°F]	ISO 62
Fluid resistance	ISO 1817 Gasoline fuel	Tensile strength 5 MPa (min.) Ultimate elongation 150% (min.)	ISO 1817 and ISO 37 after immersion for 24 h at 23°C [73°F]
	Lubricating oil O-149	Tensile strength 5 MPa (min.) Ultimate elongation 150% (min.)	ISO 1817 and ISO 37 after immersion for 24 h at 50°C [122°F]
	Hydraulic fluid H515	Tensile strength 5 MPa (min.) Ultimate elongation 150% (min.)	ISO 1817 and ISO 37 after immersion for 24 h at 23°C [73°F]

-100S

Low-Fire-Hazard Screened Material

Product Facts

- Screened Zerohal material
- Low smoke index as defined by NES 711
- Low toxicity index as defined by NES 713
- High temperature index as defined by NES 715

Applications

-100S is the Zerohal material option in the Rayaten shield (screen) termination system. This material combines the fire safety properties of -100 with the excellent EMI and RFI screening of Rayaten screened molded parts where there is a need to lower the risk.

-100S is suitable for high-performance screen terminations in areas where Zerohal materials are required.

The standard color is black.

Products made from these materials are normally used in an assembly with boot and adapter. See KTKK, TCFS in section 7.

Operating Temperature Range

-30°C to 105°C
[-22°F to 221°F]

Available in:	Americas	Europe	Asia Pacific
	■	■	■

Catalog 1654025
Revised 3-13

www.te.com

Dimensions are shown for reference purposes only. Specifications subject to change.

Dimensions are in millimeters unless otherwise specified.

USA: +1 800 522 6752
Asia Pacific: +86 0 400 820 6015
UK: +44 800 267 666

For additional support numbers please visit www.te.com

-100S (Continued)

Specifications/Approvals

Military	TE
VG 95343 Pt. 20, Pt. 22	RW-2078

Product Characteristics

		Specification Requirements*	Screening Effectiveness in dB at 3 KHz to 30 MHz (min.)	Screening Effectiveness in dB at >30 MHz to 100 MHz (min.)
Initial values		Tensile strength: 7 MPa (min.) Metal adhesion: 15 N/cm (min.) Shielding effectiveness	75	70
Thermal	Heat shock (1/2 h at 200°C [392°F])	Metal adhesion: 15 N/cm (min.) Shielding effectiveness	75	70
	Heat aging (168 h at 150°C [302°F])	Metal adhesion: 15 N/cm (min.) Shielding effectiveness	75	70
Fluids	Immersion in the following fluids for 24 h:			
	Phosphate ester hydraulic fluid DTD900/4881 at 23°C [73°F]	Tensile strength: 5 MPa (min.) Shielding effectiveness	75	70
	Water at 23°C [73°F]	Tensile strength: 5 MPa (min.) Shielding effectiveness	75	70
	Lubricating oil O-149 at 50°C [122°F]	Tensile strength: 5 MPa (min.) Shielding effectiveness	75	70
	Transformer oil S-756 at 50°C [122°F]	Tensile strength: 5 MPa (min.) Shielding effectiveness	75	70

*Values quoted are for the polymer/metal composite in all cases when terminated using epoxy adhesives. (Refer to section 5.)

-125

Flexible Fluoropolymer

Product Facts

- **Flame retardant**
- **Abrasion and cut through resistance**
- **High temperature resistance**
- **High fluid resistance**
- **Environmentally sealed**

Applications

A heat-shrinkable, flame retardant, fluid and high temperature resistant, modified fluoropolymer molding compound. A range of shapes is available. -125 molded parts are recommended for use in System 300.

Use the System 300 family of parts in military and industrial applications where excellent high temperature performance and good physical and chemical properties are a requirement.

System 300 jacketing is based on a modified fluoropolymer and features a one part epoxy adhesive in tape form.

Installation

-125 molded parts will shrink upon the application of heat in excess of 160°C ± 3°C [320°F ± 5°F].

Operating Temperature Range

-55°C to 175°C
[-67°F to 347°F]

Specifications/Approvals

RT-1334

Product Characteristics

Physical	Elastic Memory	Percent	275 minimum expansion 90 minimum retraction	Section 4.3.2
	Tensile Strength	psi (MPa)	4000 minimum (27.5)	Section 4.3.3
	Ultimate Elongation	Percent	300 minimum	ASTM D 412
	Secant Modulus	psi (MPa)	100,000 maximum (689)	Section 4.3.4 ASTM D 882
	Specific Gravity	—	1.85 maximum	ASTM D 792
	Low Temperature Flexibility 4 hours at -57 ± 3°C [-70 ± 5°F]	—	No cracking	Section 4.3.5
	Heat Shock 4 hours at 300 ± 5°C [572 ± 9°F]	—	No dripping, flowing or cracking	Section 4.3.6
	Heat Resistance 168 hours at 250 ± 5°C [482 ± 9°F] Followed by tests for: Tensile Strength Ultimate Elongation 2000 hours at 150 ± 3°C [302 ± 5°F] Followed by tests for: Tensile Strength Ultimate Elongation	— psi (MPa) Percent — psi (MPa) Percent	— 3500 minimum (24.1) 250 minimum — 3500 minimum (24.1) 250 minimum	Section 4.3.7.1 Section 4.3.3 Section 4.3.3 Section 4.3.7.2 Section 4.3.3 Section 4.3.3

Available in:	Americas	Europe	Asia Pacific
	■	■	■

Catalog 1654025
Revised 3-13

www.te.com

Dimensions are shown for reference purposes only. Specifications subject to change.

Dimensions are in millimeters unless otherwise specified.

USA: +1 800 522 6752
Asia Pacific: +86 0 400 820 6015
UK: +44 800 267 666

For additional support numbers please visit www.te.com

-125 (Continued)

Product Characteristics
(Continued)

Electrical			
Dielectric Strength	Volts/mil (kV/mm)	300 minimum (11.9)	ASTM D 149
Volume Resistivity	ohm-cm	1013 minimum	ASTM D 257
Chemical			
Corrosive Effect 16 hours at 175 ± 3°C [347 ± 5°F]	—	Noncorrosive	Section 4.3.8 ASTM D 2671 Procedure A
Flammability Initial Average Time of Burning Average Extent of Burning After Fluid Immersion 24 hours at 23 ± 3°C [73 ± 5°F] Gasoline, Automotive, Combat MIL-G-3056 Fuel Oil, Diesel VV-F-800 DF-2 Turbine Fuel, Aviation, JP-4 MIL-T-5624 Average Time of Burning Average Extent of Burning	Seconds Inches (mm) Seconds Inches (mm)	15 maximum 1 maximum (25) 30 maximum 1 maximum (25)	ASTM D 635 Section 4.3.10 ASTM D 635
Fungus Resistance	—	Rating of 1 or less	ASTM G 21
Water Absorption 24 hours at 23 ± 3°C [73 ± 5°F]	Percent	0.5 maximum	ASTM D 570
Fluid Resistance 24 hours at 23 ± 3°C [73 ± 5°F] Gasoline, Automotive, Combat MIL-G-3056 24 hours at 50 ± 3°C [122 ± 5°F] Fuel Oil Diesel VV-F-800 DF-2 Turbine Fuel, Aviation, JP-4 MIL-T-5624 Electrolyte 10873919 5% Salt Solution O-S-1926 Anti-Icing & Defrosting Fluid MIL-A-8243 Lube Oil, Aircraft, Synthetic MIL-L-23699 Lube Oil MIL-L-2104 Lube Oil, Aircraft, Synthetic MIL-L-7808 24 hours at 100 ± 3°C [212 ± 5°F] Hydraulic Fluid, Synthetic MIL-H-46170 4 hours at 50 ± 3°C [122 ± 5°F] Cleaning Compound PC-437 5 hours at 23 ± 3°C [73 ± 5°F] Decontaminating Agent, DS-2 MIL-D-50030 Decontaminating Agent STB MIL-D-12468 Followed by tests for: Tensile Strength Ultimate Elongation Weight Increase	— psi (MPa) Percent Percent	— 3000 minimum (20.7) 250 minimum 3 maximum	Section 4.3.9 Section 4.3.3 Section 4.3.3 Section 4.3.9
Adhesive Compatibility Lap Shear Strength NSM to S-1264 to DCNS	psi (kPa)	100 minimum (689)	Section 4.3.11
Nuclear			
Radiation Resistance Followed by tests for: Tensile Strength Ultimate Elongation	psi (MPa) Percent	4000 (27.6) 250	Section 4.3.12 Section 4.3.3

-770

CBRN Fluoroelastomer Molded Component

Product Facts

- **Hardened to withstand effect of NBC decontamination agents including DS-2 and STB**
- **Tested in live agent tests with HD, VX and TGD for interior and exterior exposure**
- **Meets the demands of flammability and fluid resistance of current military ground vehicles**
- **Offered with compatible tubing, adhesive, wire and other harness components for a survivable system**

Applications

-770 heat shrinkable molded shapes are made of a chemically resistant fluoropolymer that is suited for use where moisture, fungus and vehicle fluids and fuels are a concern. Chemical resistance has been tested in accordance with Army TOP 8-2-510 for NBC Contamination Survivability.

Installation

Boots shrink with temperatures in excess of 150°C

Product is provided with a minimum 2:1 expansion ratio

Optimum application range is 10% above recovered ID to 85% of the expanded ID for all openings.

Operating Temperature Range

-55°C to 125°C
[-67°F to 257°F]

Available in:	Americas	Europe	Asia Pacific
	■	■	■

Catalog 1654025
Revised 3-13

www.te.com

Dimensions are shown for reference purposes only. Specifications subject to change.

Dimensions are in millimeters unless otherwise specified.

USA: +1 800 522 6752
Asia Pacific: +86 0 400 820 6015
UK: +44 800 267 666

For additional support numbers please visit www.te.com

-770 (Continued)

Specifications/Approvals

Military	TE
SC-X15112 TOP-8-2-510	RT-770 type II (Molded Parts)

Product Characteristics

Physical

PROPERTY	UNIT	RT-770 TYPE I TUBING	RT-770 TYPE II MOLDED PARTS	TEST METHOD
Dimensions	Inches (*mm*)	In accordance with Table 1	In accordance with applicable SCD	RT-770
Tensile Strength	Psi (*MPa*)	2500 (*17.2*) minimum	2500 (*17.2*) minimum	ASTM D 412
Ultimate Elongation	Percent	300 minimum	300 minimum	ASTM D 412
Secant Modulus (expanded), 2%	Psi (*MPa*)	100,000 (*689*) maximum	100,000 (*689*) maximum	ASTM 882
Specific Gravity	--	1.85 maximum	1.85 maximum	ASTM D 792
Low Temperature Flexibility 4 hours at -55±3˚C (*-67±5˚F*)	--	No cracking	No cracking	RT-770
Heat Shock 4 hours at 225±5˚C (*437±9˚F*)	--	No dripping, flowing or cracking	No dripping, flowing or cracking	RT-770
Heat Resistance 336 hours at 175±3˚C (*347±5˚F*) Followed by tests for:				RT-770
Tensile Strength	Psi (*MPa*)	2000 (*13.8*) minimum	2000 (*13.8*) minimum	
Ultimate Elongation	Percent	250 minimum	250 minimum	

Electrical

PROPERTY	UNIT	RT-770 TYPE I TUBING	RT-770 TYPE II MOLDED PARTS	TEST METHOD
Dielectric Strength	Volts/mil (*kV/mm*)	400 (*15.7*) minimum	400 (*15.7*) minimum	ASTM D 149
Volume Resistivity	Ohm-cm	1×10^{11} minimum	1×10^{11} minimum	ASTM D 257

Nuclear

PROPERTY	UNIT	RT-770 TYPE I TUBING	RT-770 TYPE II MOLDED PARTS	TEST METHOD
Radiation Resistance -10 Mrads gamma Followed by tests for:				RT-770
Tensile Strength	Psi (*MPa*)	2000 (*13.8*) minimum	2000 (*13.8*) minimum	
Ultimate Elongation	Percent	150 minimum	150 minimum	

-770 (Continued)

Chemical

PROPERTY	UNIT	RT-770 TYPE I TUBING	RT-770 TYPE II MOLDED PARTS	TEST METHOD
Copper Mirror Corrosion 16 hours at 175±3˚C (*347±5˚F*)	--	Non Corrosive	Non Corrosive	ASTM D 2671 Procedure A
Fungus Resistance	Growth	Rating of 1 or less	Rating of 1 or less	ASTM G21
Water Absorption 24 hours at 23±3˚C (*73±5˚F*)	Percent	0.5 maximum	0.5 maximum	ASTM D 570
Flammability Average Burn Time	Seconds	15 maximum	--	ASTM D 2671 Procedure A
Average Burn Time Average extent of burning	Seconds Inches	--	15 maximum 1 maximum	ASTM D 635-98
Fluid Resistance 24 hours at 23±3˚C (*73±5˚F*) a) JP-8 Jet Fuel (MIL-DTL-83133) b) Diesel Fuel (VV-F-800, DF-2)				RT-770
Followed by tests for:				
Tensile Strength	Psi (MPa)	2000 (*13.8*) minimum	2000 (*13.8*) minimum	
Ultimate Elongation	Percent	250 minimum	250 minimum	
Weight Increase	Percent	3 maximum	3 maximum	
24 hours at 50±3˚C (*122±5˚F*) a) Bore Cleaner (MIL-PRF-372 b) Anti-Icing Fluid (SAE-AMS-1424) c) Salt-5% solution (ASTM D 632) d) Lubricating Oil (MIL-PRF-2104) e) Lubricating Oil (MIL-PRF-23699) f) Arctic Lube (MIL-PRF-46167) g) Cleaning Compound (A-A-59133) h) Electrolyte (P/N 10873919)				
Followed by tests for:				
Tensile Strength	Psi (MPa)	2000 (*13.8*) minimum	2000 (*13.8*) minimum	
Ultimate Elongation	Percent	250 minimum	250 minimum	
Weight Increase	Percent	3 maximum	3 maximum	
24 hours at 71±3˚C (*160±5˚F*) Hydraulic, synthetic (MIL-PRF-46170)				
Followed by tests for:				
Tensile Strength	Psi (MPa)	2000 (*13.8*) minimum	2000 (*13.8*) minimum	
Ultimate Elongation	Percent	250 minimum	250 minimum	
Weight Increase	Percent	3 maximum	3 maximum	
4 hours at 23±3˚C (*73±5˚F*) a) Decontaminating Agent, DS-2 (MIL-D-50030) b) Decontaminating Agent, STB (MIL-DTL-12468) 5% Solution				RT-770
Followed by tests for:				
Tensile Strength	Psi (MPa)	2000 (*13.8*) minimum	2000 (*13.8*) minimum	
Ultimate Elongation	Percent	250 minimum	250 minimum	
Weight Increase	Percent	3 maximum	3 maximum	

Catalog 1654025
Revised 3-13

www.te.com

Dimensions are shown for reference purposes only. Specifications subject to change.

Dimensions are in millimeters unless otherwise specified.

USA: +1 800 522 6752
Asia Pacific: +86 0 400 820 6015
UK: +44 800 267 666

For additional support numbers please visit www.te.com

-780

CBRN Fluoroelastomer Molded Component

Product Facts

- **Hardened to withstand effect of NBC decontamination agents including DS-2 and STB**
- **Tested in live agent tests with HD, VX and TGD for interior and exterior exposure**
- **Meets the demands of flammability and fluid resistance of current military ground vehicles**
- **Offered with compatible tubing, adhesive, wire and other harness components for a survivable system**

Applications

-780 heat shrinkable molded shapes are made of a chemically resistant fluoropolymer that is suited for use where moisture, fungus and vehicle fluids and fuels are a concern. Chemical resistance has been tested in accordance with Army TOP 8-2-510 for NBC Contamination Survivability.

Installation

Boots shrink with temperatures in excess of 150°C

Product is provided with a minimum 2:1 expansion ratio

Optimum application range is 10% above recovered ID to 85% of the expanded ID for all openings.

Operating Temperature Range

-55°C to 175°C
[-67°F to 347°F]

Available in:	Americas	Europe	Asia Pacific
	■	■	■

Catalog 1654025
Revised 3-13

www.te.com

Dimensions are shown for reference purposes only. Specifications subject to change.

Dimensions are in millimeters unless otherwise specified.

USA: +1 800 522 6752
Asia Pacific: +86 0 400 820 6015
UK: +44 800 267 666

For additional support numbers please visit www.te.com

-780 (Continued)

Specifications/Approvals

Military	TE
SC-X15112 TOP-8-2-510	RT-780 type II (Molded Parts)

Product Characteristics

Physical

PROPERTY	UNIT	RT-780 TYPE I TUBING	RT-780 TYPE II MOLDED PARTS	TEST METHOD
Dimensions	Inches (*mm*)	In accordance with Table 1	In accordance with applicable SCD	RT-770
Tensile Strength	Psi (*MPa*)	3000 (*20.7*) minimum	3000 (*20.7*) minimum	ASTM D 412
Ultimate Elongation	Percent	300 minimum	300 minimum	ASTM D 412
Secant Modulus (expanded), 2%	Psi (*MPa*)	50,000 (*345*) maximum	50,000 (*345*) maximum	ASTM 882
Specific Gravity	--	2.0 maximum	2.0 maximum	ASTM D 792
Low Temperature Flexibility 4 hours at -55±3˚C (*-67±5˚F*)	--	No cracking	No cracking	RT-780
Heat Shock 4 hours at 275±5˚C (*527±9˚F*)	--	No dripping, flowing or cracking	No dripping, flowing or cracking	RT-780
Heat Resistance 336 hours at 200±3˚C (*392±5˚F*) Followed by tests for:				RT-780
Tensile Strength	Psi (*MPa*)	2000 (*13.8*) minimum	2000 (*13.8*) minimum	
Ultimate Elongation	Percent	250 minimum	250 minimum	

Electrical

PROPERTY	UNIT	RT-780 TYPE I TUBING	RT-780 TYPE II MOLDED PARTS	TEST METHOD
Dielectric Strength	Volts/mil (*kV/mm*)	200 (*7.9*) minimum	200 (*7.9*) minimum	ASTM D 149
Volume Resistivity	Ohm-cm	1×10^{11} minimum	1×10^{11} minimum	ASTM D 257

Nuclear

PROPERTY	UNIT	RT-780 TYPE I TUBING	RT-780 TYPE II MOLDED PARTS	TEST METHOD
Radiation Resistance -10 Mrads gamma Followed by tests for:				RT-780
Tensile Strength	Psi (*MPa*)	2000 (*13.8*) minimum	2000 (*13.8*) minimum	
Ultimate Elongation	Percent	150 minimum	150 minimum	

Catalog 1654025
Revised 3-13

www.te.com

Dimensions are shown for reference purposes only. Specifications subject to change.

Dimensions are in millimeters unless otherwise specified.

USA: +1 800 522 6752
Asia Pacific: +86 0 400 820 6015
UK: +44 800 267 666

For additional support numbers please visit www.te.com

-780 (Continued)

Chemical

PROPERTY	UNIT	RT-780 TYPE I TUBING	RT-780 TYPE II MOLDED PARTS	TEST METHOD
Copper Mirror Corrosion 16 hours at 175±3˚C (*347±5˚F*)	--	Non Corrosive	Non Corrosive	ASTM D 2671 Procedure A
Fungus Resistance	Growth	Rating of 1 or less	Rating of 1 or less	ASTM G21
Water Absorption 24 hours at 23±3˚C (*73±5˚F*)	Percent	0.5 maximum	0.5 maximum	ASTM D 570
Flammability Average Burn Time	--	1) 25% max. flag burn 2) No burning of cotton 3) No flaming or glowing longer than 30 seconds	--	ASTM D 2671 Procedure C
Average Burn Time	Seconds	--	15 maximum	ASTM D 635-98
Average extent of burning	Inches		1 maximum	
Fluid Resistance 24 hours at 23±3˚C (*73±5˚F*) a) JP-8 Jet Fuel (MIL-DTL-83133)				RT-780
Followed by tests for:				
Tensile Strength	Psi (MPa)	2000 (*13.8*) minimum	2000 (*13.8*) minimum	
Ultimate Elongation	Percent	250 minimum	250 minimum	
Weight Increase	Percent	3 maximum	3 maximum	
24 hours at 50±3˚C (*122±5˚F*) a) Bore Cleaner (MIL-PRF-372 b) Diesel Fuel DF-2 (A-A-525571) c) Anti-Icing Fluid (SAE-AMS-1424) d) Salt-5% solution (ASTM D 632) e) Lubricating Oil (MIL-PRF-2104) f) Lubricating Oil (MIL-PRF-23699) g) Arctic Lube (MIL-PRF-46167) h) Cleaning Compound (A-A-59133) i) Electrolyte (P/N 10873919)				
Followed by tests for:				
Tensile Strength	Psi (MPa)	2000 (*13.8*) minimum	2000 (*13.8*) minimum	
Ultimate Elongation	Percent	250 minimum	250 minimum	
Weight Increase	Percent	3 maximum	3 maximum	
24 hours at 71±3˚C (*160±5˚F*) Hydraulic, synthetic (MIL-PRF-46170)				
Followed by tests for:				
Tensile Strength	Psi (MPa)	2000 (*13.8*) minimum	2000 (*13.8*) minimum	
Ultimate Elongation	Percent	250 minimum	250 minimum	
Weight Increase	Percent	3 maximum	3 maximum	
4 hours at 23±3˚C (*73±5˚F*) a) Decontaminating Agent, DS-2 (MIL-D-50030) b) Decontaminating Agent, STB (MIL-DTL-12468) 5% Solution				RT-780
Followed by tests for:				
Tensile Strength	Psi (MPa)	2000 (*13.8*) minimum	2000 (*13.8*) minimum	
Ultimate Elongation	Percent	250 minimum	250 minimum	
Weight Increase	Percent	3 maximum	3 maximum	

-790

CBRN Fluoroelastomer Molded Component

Product Facts

- **Hardened to withstand effect of NBC decontamination agents including DS-2 and STB**
- **Tested in live agent tests with HD, VX and TGD for interior and exterior exposure**
- **Meets the demands of flammability and fluid resistance of current military ground vehicles**
- **Offered with compatible tubing, adhesive, wire and other harness components for a survivable system**

Applications

-790 heat shrinkable molded shapes are made of a chemically resistant fluoropolymer that is suited for use where moisture, fungus and vehicle fluids and fuels are a concern. Chemical resistance has been tested in accordance with Army TOP 8-2-510 for NBC Contamination Survivability.

Installation

Boots shrink with temperatures in excess of 150°C

Product is provided with a minimum 2:1 expansion ratio

Optimum application range is 10% above recovered ID to 85% of the expanded ID for all openings.

Operating Temperature Range

-55°C to 200°C
[-67°F to 392°F]

Available in:	Americas	Europe	Asia Pacific
	■	■	■

Catalog 1654025
Revised 3-13

www.te.com

Dimensions are shown for reference purposes only. Specifications subject to change.

Dimensions are in millimeters unless otherwise specified.

USA: +1 800 522 6752
Asia Pacific: +86 0 400 820 6015
UK: +44 800 267 666

For additional support numbers please visit www.te.com

-790 (Continued)

Specifications/Approvals

Military	TE
SC-X15112 TOP-8-2-510	RT-790 type II (Molded Parts)

Product Characteristics

Physical

PROPERTY	UNIT	RT-790 TYPE I TUBING	RT-790 TYPE II MOLDED PARTS	TEST METHOD
Dimensions	Inches (*mm*)	In accordance with Table 1	In accordance with applicable SCD	RT-790
Tensile Strength	Psi (*MPa*)	4000 (*27.6)* minimum	4000 (*27.6)* minimum	ASTM D 412
Ultimate Elongation	Percent	300 minimum	300 minimum	ASTM D 412
Secant Modulus (expanded), 2%	Psi (*MPa*)	50,000 (*345*) maximum	50,000 (*345*) maximum	ASTM 882
Specific Gravity	--	2.0 maximum	2.0 maximum	ASTM D 792
Low Temperature Flexibility 4 hours at -65±3˚C (*-85±5˚F*)	--	No cracking	No cracking	RT-790
Heat Shock 4 hours at 300±5˚C (*572±9˚F*)	--	No dripping, flowing or cracking	No dripping, flowing or cracking	RT-790
Heat Resistance 336 hours at 250±3˚C (*482±5˚F*) Followed by tests for:				RT-790
Tensile Strength	Psi (*MPa*)	2000 (*13.8*) minimum	2000 (*13.8*) minimum	
Ultimate Elongation	Percent	150 minimum	150 minimum	

Electrical

PROPERTY	UNIT	RT-790 TYPE I TUBING	RT-790 TYPE II MOLDED PARTS	TEST METHOD
Dielectric Strength	Volts/mil (*kV/mm*)	200 (*7.9*) minimum	200 (*7.9*) minimum	ASTM D 149
Volume Resistivity	Ohm-cm	1×10^{11} minimum	1×10^{11} minimum	ASTM D 257

Nuclear

PROPERTY	UNIT	RT-790 TYPE I TUBING	RT-790 TYPE II MOLDED PARTS	TEST METHOD
Radiation Resistance -10 Mrads gamma Followed by tests for:				RT-790
Tensile Strength	Psi (*MPa*)	3000 (*20.7*) minimum	3000 (*20.7*) minimum	
Ultimate Elongation	Percent	150 minimum	150 minimum	

-790 (Continued)

Chemical

PROPERTY	UNIT	RT-790 TYPE I TUBING	RT-790 TYPE II MOLDED PARTS	TEST METHOD
Copper Mirror Corrosion 16 hours at 200±3˚C (*392±5˚F*)	--	Non Corrosive	Non Corrosive	ASTM D 2671 Procedure A
Fungus Resistance	Growth	Rating of 1 or less	Rating of 1 or less	ASTM G21
Water Absorption 24 hours at 23±3˚C (*73±5˚F*)	Percent	0.5 maximum	0.5 maximum	ASTM D 570
Flammability	--	1) 25% max. flag burn 2) No burning of cotton 3) No flaming or glowing longer than 30 seconds	--	ASTM D 2671 Procedure C
Average Burn Time	Seconds	--	15 maximum	ASTM D 635-98
Average extent of burning	Inches		1 maximum	
Fluid Resistance 24 hours at 23±3˚C (*73±5˚F*) a) JP-8 Jet Fuel (MIL-DTL-83133)				RT-790
Followed by tests for:				
Tensile Strength	Psi (MPa)	3500 (*24.1*) minimum	3500 (*24.1*) minimum	
Ultimate Elongation	Percent	250 minimum	250 minimum	
Weight Increase	Percent	3 maximum	3 maximum	
24 hours at 50±3˚C (*122±5˚F*) a) Bore Cleaner (MIL-PRF-372 b) Diesel Fuel DF-2 (A-A-525571) c) Anti-Icing Fluid (SAE-AMS-1424) d) Salt-5% solution (ASTM D 632) e) Lubricating Oil (MIL-PRF-2104) f) Lubricating Oil (MIL-PRF-23699) g) Arctic Lube (MIL-PRF-46167) h) Cleaning Compound (A-A-59133) i) Electrolyte (P/N 10873919)				
Followed by tests for:				
Tensile Strength	Psi (MPa)	3500 (*24.1*) minimum	3500 (*24.1*) minimum	
Ultimate Elongation	Percent	250 minimum	250 minimum	
Weight Increase	Percent	3 maximum	3 maximum	
24 hours at 71±3˚C (*160±5˚F*) Hydraulic, synthetic (MIL-PRF-46170)				
Followed by tests for:				
Tensile Strength	Psi (MPa)	3500 (*24.1*) minimum	3500 (*24.1*) minimum	
Ultimate Elongation	Percent	250 minimum	250 minimum	
Weight Increase	Percent	3 maximum	3 maximum	
4 hours at 23±3˚C (*73±5˚F*) a) Decontaminating Agent, DS-2 (MIL-D-50030) b) Decontaminating Agent, STB (MIL-DTL-12468) 5% Solution				RT-790
Followed by tests for:				
Tensile Strength	Psi (MPa)	3500 (*24.1*) minimum	3500 (*24.1*) minimum	
Ultimate Elongation	Percent	250 minimum	250 minimum	
Weight Increase	Percent	3 maximum	3 maximum	

End Caps, 101A011 to 094

TE end caps provide optimum waterproofing and environmental protection for underwater, underground, or outdoor applications.

The end caps are highly resistant to moisture, fungus, and weathering.

Applications

Use for protecting cables and pipes or capping unused outlets in transitions. Provides an environmental seal when used with adhesive.

As Supplied (a)

After Unrestricted Recovery (b)

Product Dimensions

Part No.	H Min. a	H Max. b	P Min. b	HW ±20% b
101A011	5.10 [.20]	2.00 [.08]	22.90 [.90]	1.02 [.04]
101A021	7.40 [.29]	3.30 [.13]	25.40 [1.00]	1.27 [.05]
101A031	10.20 [.40]	4.80 [.18]	30.50 [1.20]	1.52 [.06]
101A041	15.20 [.60]	6.40 [.25]	40.60 [1.60]	1.78 [.07]
101A062	25.40 [1.00]	11.40 [.45]	68.80 [2.70]	2.29 [.09]
101A083	50.80 [2.00]	22.90 [.90]	101.60 [4.00]	2.79 [.11]
101A094	83.80 [3.30]	38.10 [1.50]	114.30 [4.50]	3.05 [.12]

Note: Coating is optional. As supplied dimensions appearing in table are for uncoated parts. When coating is added, entry diameters will be reduced by 1.5 [.06] max.

Available in:	Americas	Europe	Asia Pacific
	■	■	■

Dimensions are shown for reference purposes only. Specifications subject to change.

Dimensions are in millimeters unless otherwise specified.

USA: +1 800 522 6752
Asia Pacific: +86 0 400 820 6015
UK: +44 800 267 666

For additional support numbers please visit www.te.com

End Caps, 101A011 to 094 (Continued)

Materials Available

Material*	Material Description	Precoating No.	Adhesive Part No.**
-3	Semirigid polyolefin	/42 or /86	S-1017 or S-1048
-4	Flexible polyolefin	/42 or /86	S-1017 or S-1048
-12	Fluoroelastomer	N/A	S-1255-04
-25	Fluid-resistant elastomer	/42 or /86	S-1017 or S-1048 or S-1125
-100	Polyolefin, Zerohal	/180	S-1030

*For more information, please see the appropriate material page in this section.
**For more information, please see section 5.

Catalog 1654025
Revised 3-13

www.te.com

Dimensions are shown for reference purposes only. Specifications subject to change.

Dimensions are in millimeters unless otherwise specified.

USA: +1 800 522 6752
Asia Pacific: +86 0 400 820 6015
UK: +44 800 267 666

For additional support numbers please visit www.te.com

SSC

Heat-Shrinkable End Caps

Product Facts

- **Self-sealing for waterproofing (sealant-coated parts only)**
- **Electrical insulation to 1000 V**
- **Abrasion-resistance**
- **Mechanical protection**
- **Easy installation, requiring no special skills**
- **Operating temperature range of -40°C to 85°C [-40°F to 185°F]**
- **Minimum shrink temperature of 121°C [250°F]**

Applications

These SSC heat-shrinkable end caps are made from a thermally stabilized, modified polyolefin, which makes them highly resistant to moisture, fungus, and weathering. The end caps also have excellent electrical properties. End caps coated with sealant are available for underwater or underground applications with a pressure differential up to 20 psi between the inside of the cable and the outside environment. End caps may be used over lead, steel, aluminum, copper, polyethylene, polyolefin, EPR, and PVC jacketing materials.

Available in:	Americas	Europe	Asia Pacific
	■	■	■

Catalog 1654025
Revised 3-13

www.te.com

Dimensions are shown for reference purposes only. Specifications subject to change.

Dimensions are in millimeters unless otherwise specified.

USA: +1 800 522 6752
Asia Pacific: +86 0 400 820 6015
UK: +44 800 267 666

For additional support numbers please visit www.te.com

SSC (Continued)

Specifications/Approvals

Type	TE	Military/Commercial
SSC-X and SSC-XTV	SSC specification control drawing	PPS-3011/6
—	RW-2024	—

Adhesive is /239 = PPS = 3012/70

Product Dimensions

Part No.	Inner Diameter* As Supplied (min.)	Recovered Inside Dia. (max.)	Length Recovered ± 10 %	Wall Thickness Recovered ± 20 %
SSC-1	10.00 [.390]	4.00 [.160]	33.50 [1.320]	2.00 [.080]
SSC-2	20.00 [.790]	7.50 [.300]	55.30 [2.180]	2.30 [.090]
SSC-3	35.00 [1.380]	15.00 [.590]	89.90 [3.540]	3.00 [.120]
SSC-4	55.00 [2.170]	25.00 [.980]	143.20 [5.640]	3.30 [.130]
SSC-5	75.00 [2.950]	32.00 [1.250]	150.10 [5.910]	3.30 [.130]
SSC-5M1	75.00 [2.950]	32.00 [1.250]	79.25 [3.120]	3.30 [.130]
SSC-6	100.00 [3.940]	45.00 [1.770]	162.50 [6.400]	4.00 [.160]
SSC-7	120.00 [4.720]	70.00 [2.760]	145.00 [5.710]	3.80 [.150]

*As-supplied dimensions appearing in table are for uncoated parts. When adhesive is added, entry diameters will be reduced by 1.5 [.06] maximum.

Ordering Information

Military	
SSC-XTV	Sealing end cap with adhesive , w/ pressure valve
SSC-X	Sealing end cap with adhesive
SSC-XU	End cap, uncoated

Catalog 1654025
Revised 3-13

www.te.com

Dimensions are shown for reference purposes only. Specifications subject to change.

Dimensions are in millimeters unless otherwise specified.

USA: +1 800 522 6752
Asia Pacific: +86 0 400 820 6015
UK: +44 800 267 666

For additional support numbers please visit www.te.com

202A111 to 196

Straight Boot

As Supplied (a)

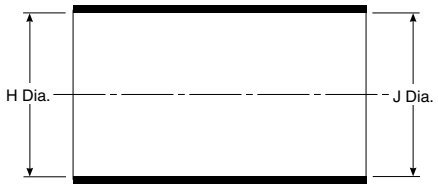

After Unrestricted Recovery (b)

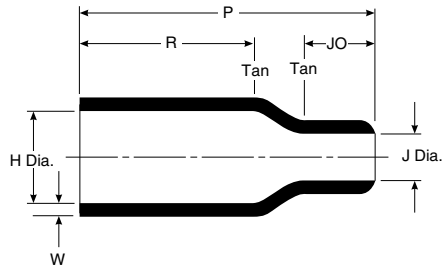

Applications

Use for mechanical protection and connector/cable strain relief. This family of boots has no lip, so that a boot can be installed directly onto the connector accessory thread.

Materials Available

Material*	Material Description	Precoating No.	Adhesive Part No.**
-3	Semirigid polyolefin	/42 or /86	S-1017 or S-1048
-4	Flexible polyolefin	/42 or /86	S-1017 or S-1048
-12	Fluoroelastomer	N/A	S-1255-04
-25	Fluid-resistant elastomer	/42 or /86 or /225	S-1017 or S-1048 or S-1125
-100	Polyolefin, Zerohal	/86 or /180	S-1048 or S-1030

*For more information, please see the appropriate material page in this section.
**For more information, please see section 5.

Product Dimensions

Part No.	H Min. -3, -4, -25 a	H Min. -12, -100 a	H Max. b	J Min. -3, -4, -25 a	J Min. -12, -100 a	J Max. b	P ±10% b	R ±10% b	JO Ref. b	W ±20% b
202A111	16.5 [.65]	16.5 [.65]	7.9 [.31]	16.5 [.65]	11.9 [.47]	3.8 [.15]	25.4 [1.00]	14.2 [.56]	5.8 [.23]	1.27 [.05]
202A121	24.6 [.97]	22.6 [.89]	9.9 [.39]	24.6 [.97]	17.8 [.70]	5.3 [.21]	38.1 [1.50]	21.8 [.86]	9.1 [.36]	1.52 [.06]
202A132	28.4 [1.12]	26.2 [1.03]	14.2 [.56]	28.4 [1.12]	20.3 [.80]	6.6 [.26]	51.3 [2.02]	27.9 [1.10]	13.0 [.51]	1.78 [.07]
202A142	31.0 [1.22]	31.0 [1.22]	17.8 [.70]	31.0 [1.22]	25.4 [1.00]	7.4 [.29]	66.8 [2.63]	35.6 [1.40]	17.8 [.70]	1.78 [.07]
202A153	36.1 [1.42]	36.1 [1.42]	21.9 [.86]	36.1 [1.42]	26.2 [1.03]	8.6 [.34]	73.7 [2.90]	41.4 [1.63]	16.0 [.63]	1.78 [.07]
202A163	42.7 [1.68]	42.7 [1.68]	27.4 [1.08]	42.7 [1.68]	27.2 [1.07]	9.4 [.37]	99.1 [3.90]	62.7 [2.47]	18.0 [.71]	2.03 [.08]
202A174	51.8 [2.04]	48.3 [1.90]	35.3 [1.39]	51.8 [2.04]	48.3 [1.90]	16.0 [.63]	130.0 [5.13]	64.8 [2.55]	41.9 [1.65]	3.30 [.13]
202A185	66.0 [2.60]	66.0 [2.60]	43.7 [1.72]	66.0 [2.60]	54.1 [2.13]	19.6 [.77]	161.3 [6.35]	90.2 [3.55]	47.8 [1.88]	3.81 [.15]
202A196	86.4 [3.40]	86.4 [3.40]	57.2 [2.25]	86.4 [3.40]	71.4 [2.81]	26.9 [1.06]	212.6 [8.37]	113.0 [4.45]	62.2 [2.45]	4.06 [.16]

Note: Coating is optional. As supplied dimensions appearing in table are for uncoated parts. When coating is added, entry diameters will be reduced by 1.5 [.06] max.

Available in:	Americas	Europe	Asia Pacific
	■	■	■

Catalog 1654025
Revised 3-13

www.te.com

Dimensions are shown for reference purposes only. Specifications subject to change.

Dimensions are in millimeters unless otherwise specified.

USA: +1 800 522 6752
Asia Pacific: +86 0 400 820 6015
UK: +44 800 267 666

For additional support numbers please visit www.te.com

202C611 to 663

Uniboot

As Supplied (a)

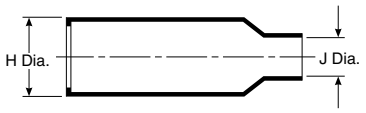

After Unrestricted Recovery (b)

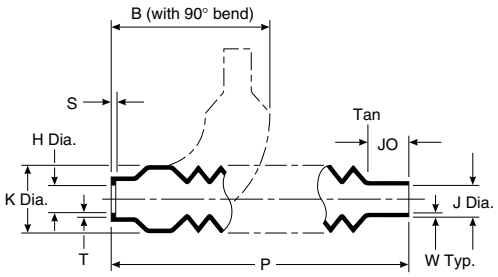

Applications

Use to provide abrasion protection for connectors. The flexibility of design allows a variety of cable outlet angles. When installed on a spin-coupling adapter, cold reentry to the connector is possible by compressing the molded part. When used with adhesive it provides environmental sealing.

Materials Available

Material*	Material Description	Precoating No.	Adhesive Part No.**
-50	Fluoroelastomer polymer blend	N/A	S-1125
-51	Elastomer polymer blend	/164	S-1124
-71	Flexible polyolefin	/42 or /86	S-1017 or S-1048

*For more information, please see the appropriate material page in this section.
**For more information, please see section 5.

Product Dimensions

Part No.	H Min. a -50, -51	H Min. a -71	H Max. b	J Min. a -50, -51	J Min. a -71	J Max. b	K Max. b	P ±10% b	JO ±10% b	S ±.03[0.76] b	T ±.03[0.76] b	W Min. b	B Nom. b
202C611	14.2 [.56]	17.5 [.69]	6.9 [.27]	11.2 [.44]	14.2 [.56]	4.8 [.19]	21.1 [.83]	120.7 [4.75]	17.5 [.69]	1.52 [.06]	1.27 [.05]	0.33 [.013]	62.5 [2.46]
202C621	22.4 [.88]	26.4 [1.04]	11.7 [.46]	17.8 [.70]	26.4 [1.04]	8.1 [.32]	26.7 [1.05]	133.4 [5.25]	19.0 [.78]	1.52 [.06]	1.27 [.05]	0.46 [.018]	67.8 [2.67]
202C632	34.0 [1.34]	38.1 [1.50]	17.5 [.69]	26.9 [1.06]	38.1 [1.50]	12.7 [.50]	32.8 [1.29]	146.1 [5.75]	22.4 [.88]	1.78 [.07]	1.27 [.05]	0.51 [.020]	73.4 [2.89]
202C642	44.2 [1.74]	47.8 [1.88]	22.4 [.88]	36.6 [1.44]	47.8 [1.88]	17.5 [.69]	37.8 [1.49]	158.8 [6.25]	25.4 [1.00]	1.78 [.07]	1.27 [.05]	0.61 [.024]	78.2 [3.08]
202C653	53.8 [21.2]	54.9 [2.16]	27.9 [1.10]	45.7 [1.80]	54.9 [2.16]	22.4 [.88]	42.9 [1.69]	171.5 [6.75]	28.4 [1.12]	1.78 [.07]	2.03 [.08]	0.61 [.024]	82.8 [3.26]
202C663	57.2 [22.5]	77.2 [3.04]	40.6 [1.60]	57.2 [2.25]	54.6 [2.15]	22.9 [.90]	62.2 [2.45]	236.2 [9.30]	35.1 [1.38]	2.03 [.08]	2.03 [.08]	0.66 [.026]	138.4 [5.45]

Note: Coating is optional. As supplied dimensions appearing in table are for uncoated parts. When coating is added, entry diameters will be reduced by 1.5 [.06] max.

Available in:	Americas	Europe	Asia Pacific
	■	■	■

Catalog 1654025
Revised 3-13

www.te.com

Dimensions are shown for reference purposes only. Specifications subject to change.

Dimensions are in millimeters unless otherwise specified.

USA: +1 800 522 6752
Asia Pacific: +86 0 400 820 6015
UK: +44 800 267 666

For additional support numbers please visit www.te.com

202D121 to 196

Straight, Lipped Boot

As Supplied (a)

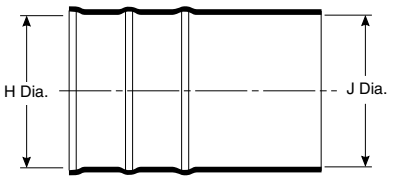

After Unrestricted Recovery (b)

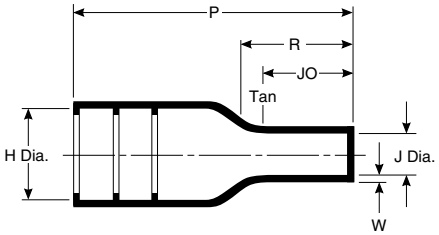

Applications

Use in conjunction with TE adapters to provide strain relief for harness systems using circular connectors. Boot is compatible with all grooved adapters of appropriate shell size.

Materials Available

Material*	Material Description	Precoating No.	Adhesive Part No.**
-3	Semirigid polyolefin	/42 or /86	S-1017 or S-1048
-4	Flexible polyolefin	/42 or /86	S-1017 or S-1048
-12	Fluoroelastomer	N/A	S-1255-04
-25	Fluid-resistant elastomer	/42 or /86 or /225	S-1017 or S-1048 or S-1125
-100	Polyolefin, Zerohal	186/180	S-1048 or S-1030

*For more information, please see the appropriate material page in this section.
**For more information, please see section 5.

Product Dimensions

Part No.	H		J			P	JO	W	R
	Min. a	Max. b	Min. -3, -4, -25 a	Min. -12, -100 a	Max. b	±10% b	±10% b	±20% b	±10% b
202D121	23.3 [.92]	10.5 [.41]	23.3 [.92]	12.4 [.49]	5.6 [.22]	38.1 [1.50]	10.2 [.40]	1.78 [.07]	—
202D132	28.4 [1.12]	14.3 [.56]	28.4 [1.12]	14.7 [.58]	6.6 [.26]	54.9 [2.16]	16.5 [.65]	1.78 [.07]	21.6 [.85]
202D142	31.0 [1.22]	17.8 [.70]	31.0 [1.22]	16.0 [.63]	7.2 [.28]	66.8 [2.63]	17.8 [.70]	2.03 [.08]	24.5 [.96]
202D153	36.0 [1.42]	22.4 [.88]	36.0 [1.42]	18.5 [.73]	8.4 [.33]	80.0 [3.15]	20.8 [.82]	2.03 [.08]	29.7 [1.17]
202D163	42.7 [1.68]	28.2 [1.11]	42.7 [1.68]	22.0 [.87]	9.9 [.39]	103.6 [4.08]	24.6 [.97]	2.29 [.09]	36.7 [1.44]
202D174	51.8 [2.04]	35.1 [1.38]	51.8 [2.04]	35.3 [1.39]	15.8 [.62]	130.3 [5.13]	39.6 [1.56]	3.30 [.13]	53.8 [2.12]
202D185	66.0 [2.60]	44.5 [1.75]	66.0 [2.60]	45.7 [1.80]	20.4 [.80]	165.1 [6.50]	48.3 [1.90]	4.06 [.16]	65.6 [2.59]
202D196	81.7 [3.22]	57.6 [2.27]	81.7 [3.22]	57.1 [2.25]	25.4 [1.00]	177.8 [7.00]	47.8 [1.88]	4.06 [.16]	67.1 [2.64]

Note: Coating is optional. As supplied dimensions appearing in table are for uncoated parts. When coating is added, entry diameters will be reduced by 1.5 [.06] max.

Available in:	Americas	Europe	Asia Pacific
	■	■	■

Catalog 1654025
Revised 3-13

www.te.com

Dimensions are shown for reference purposes only. Specifications subject to change.

Dimensions are in millimeters unless otherwise specified.

USA: +1 800 522 6752
Asia Pacific: +86 0 400 820 6015
UK: +44 800 267 666

For additional support numbers please visit www.te.com

202D211 to 299

Straight, Lipped Boot

As Supplied (a)

After Unrestricted Recovery (b)

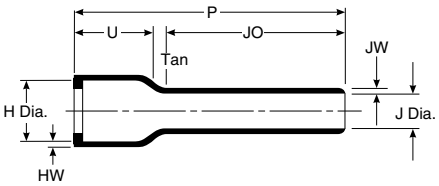

Applications

Use with circular connectors and the appropriate TE backshell adapter to provide connector/cable strain relief. Boot is used on open-wire-bundle airborne harnesses, or applications where the long tail replaces cable jacketing removed during termination.

Materials Available

Material*	Material Description	Precoating No.	Adhesive Part No.**
-3	Semirigid polyolefin	/42 or /86	S-1017 or S-1048
-4	Flexible polyolefin	/42 or /86	S-1017 or S-1048
-12	Fluoroelastomer	N/A	S-1255-04
-25	Fluid-resistant elastomer	/42 or /86 or /225	S-1017 or S-1048 or S-1125
-100	Polyolefin, Zerohal	/86 or /180	S-1048 or S-1030

*For more information, please see the appropriate material page in this section.
**For more information, please see section 5.

Product Dimensions

Part No.	H Min. a	H Max. b	J Min. -3, -4, -25 a	J Min. -12, -100 a	J Max. b	P ±10% b	JO ±10% b	U ±10% b	HW ±20% b	JW ±20% b
202D211	22.4 [.88]	11.4 [.45]	22.4 [.88]	14.0 [.55]	6.4 [.25]	105.9 [4.17]	86.4 [3.40]	14.2 [.56]	1.52 [.06]	1.14 [.045]
202D221	25.7 [1.01]	15.0 [.59]	25.7 [1.01]	16.0 [.63]	7.4 [.29]	121.2 [4.77]	98.6 [3.88]	15.0 [.59]	1.52 [.06]	1.14 [.045]
202D232	29.5 [1.16]	18.8 [.74]	29.5 [1.16]	18.3 [.72]	8.4 [.33]	138.7 [5.46]	112.8 [4.44]	15.5 [.61]	1.78 [.07]	1.14 [.045]
202D242	34.0 [1.34]	22.9 [.90]	34.0 [1.34]	21.3 [.84]	9.7 [.38]	159.5 [6.28]	130.8 [5.15]	15.7 [.62]	1.78 [.07]	1.14 [.045]
202D253	37.3 [1.47]	29.5 [1.16]	37.3 [1.47]	23.1 [.91]	10.4 [.41]	177.8 [7.00]	142.2 [5.60]	18.0 [.71]	2.0 [.08]	1.14 [.045]
202D263	43.7 [1.72]	34.0 [1.34]	43.7 [1.72]	27.2 [1.07]	12.2 [.48]	203.2 [8.00]	163.1 [6.42]	19.8 [.78]	2.0 [.08]	1.14 [.045]
202D274	50.0 [1.97]	41.2 [1.62]	50.0 [1.97]	31.5 [1.24]	14.2 [.56]	203.2 [8.00]	157.7 [6.21]	20.8 [.82]	2.3 [.09]	1.40 [.055]
202D285	62.7 [2.47]	47.0 [1.85]	62.7 [2.47]	39.1 [1.54]	17.5 [.69]	203.2 [8.00]	153.2 [6.03]	23.4 [.92]	2.5 [.10]	1.40 [.055]
202D296	69.3 [2.73]	59.7 [2.35]	69.3 [2.73]	43.2 [1.70]	19.6 [.77]	203.2 [8.00]	143.3 [5.64]	23.6 [.93]	2.5 [.10]	1.40 [.055]
202D299	81.8 [3.22]	67.1 [2.64]	81.8 [3.22]	51.1 [2.01]	22.9 [.90]	203.2 [8.00]	138.4 [5.45]	31.2 [1.23]	2.5 [.10]	1.40 [.055]

Note: Coating is optional. As supplied dimensions appearing in table are for uncoated parts. When coating is added, entry diameters will be reduced by 1.5 [.06] max.

Available in:	Americas	Europe	Asia Pacific
	■	■	■

Catalog 1654025
Revised 3-13

www.te.com

Dimensions are shown for reference purposes only. Specifications subject to change.

Dimensions are in millimeters unless otherwise specified.

USA: +1 800 522 6752
Asia Pacific: +86 0 400 820 6015
UK: +44 800 267 666

For additional support numbers please visit www.te.com

202D921 to 963

Straight, Lipped Boot

As Supplied (a)

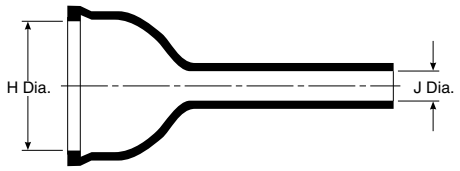

After Unrestricted Recovery (b)

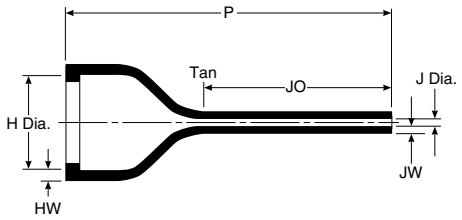

Applications

Use with circular connectors and the appropriate TE backshell adapter to provide connector/cable strain relief. Boot is used in applications where only a small number of the available contacts are utilized, thus resulting in a high ratio between the adapter and cable diameters.

Materials Available

Material*	Material Description	Precoating No.	Adhesive Part No.**
-3	Semirigid polyolefin	/42 or /86	S-1017 or S-1048
-4	Flexible polyolefin	/42 or /86	S-1017 or S-1048
-12	Fluoroelastomer	N/A	S-1255-04
-25	Fluid-resistant elastomer	/42 or /86 or /225	S-1017 or S-1048 or S-1125
-100	Polyolefin, Zerohal	/86 or /180	S-1048 or S-1030

*For more information, please see the appropriate material page in this section.
**For more information, please see section 5.

Product Dimensions

Part No.	H		J			P	JO	HW	JW
	Min. a	Max. b	Min. -3, -4, -25 a	Min. -12, -100 a	Max. b	±10% b	±10% b	±20% b	±20% b
202D921	19.3 [.76]	13.0 [.51]	6.3 [.25]	4.5 [.18]	2.1 [.08]	60.2 [2.37]	37.6 [1.48]	1.52 [.06]	1.14 [.045]
202D932	26.1 [1.03]	19.1 [.75]	7.6 [.30]	5.5 [.22]	2.6 [.10]	74.2 [2.92]	45.0 [1.77]	1.78 [.07]	1.14 [.045]
202D953	34.2 [1.35]	26.0 [1.02]	9.6 [.38]	6.6 [.26]	3.1 [.12]	84.3 [3.32]	51.1 [2.01]	1.78 [.07]	1.14 [.045]
202D963	43.6 [1.72]	34.1 [1.34]	11.4 [.45]	7.8 [.31]	3.6 [.14]	99.6 [3.92]	57.7 [2.27]	1.78 [.07]	1.14 [.045]

Note: Coating is optional. As supplied dimensions appearing in table are for uncoated parts. When coating is added, entry diameters will be reduced by 1.5 [.06] max.

Available in:	Americas	Europe	Asia Pacific
	■	■	■

Dimensions are shown for reference purposes only. Specifications subject to change.

Dimensions are in millimeters unless otherwise specified.

USA: +1 800 522 6752
Asia Pacific: +86 0 400 820 6015
UK: +44 800 267 666

For additional support numbers please visit www.te.com

202F211 to 274

Straight, Lipped Boot

As Supplied (a)

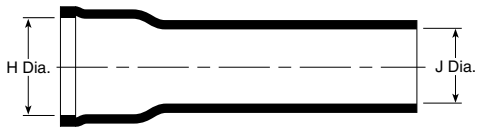

After Unrestricted Recovery (b)

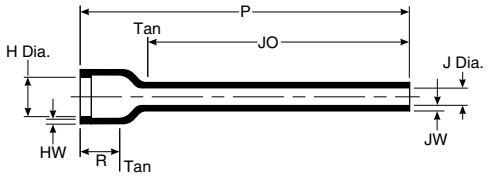

Applications

Use in conjunction with TE adapters to provide strain relief for harness systems using circular connectors. Boot is compatible with all grooved adapters of the appropriate shell size.

Materials Available

Material*	Material Description	Precoating No.	Adhesive Part No.**
-50	Flexible Fluoroelastomer polymer blend	N/A	S-1125
-51	Flexible elastomer polymer blend	/164	S-1124
-71	Flexible polyolefin	/42 or /86	S-1017 or S-1048

Product Dimensions

Part No.	H Min. a	H Max. b	J Min. a	J Max. b	P ±10% b	JO ±10% b	HW ±20% b	JW ±20% b
202F211	23.9 [.94]	9.9 [.39]	17.3 [.68]	6.6 [.26]	105.9 [4.17]	86.4 [3.40]	1.5 [.06]	1.5 [.06]
202F221	27.2 [1.07]	13.2 [.52]	20.8 [.82]	7.6 [.30]	121.2 [4.77]	98.6 [3.88]	1.5 [.06]	1.5 [.06]
202F232	31.0 [1.22]	18.5 [.73]	24.4 [.96]	8.9 [.35]	138.7 [5.46]	112.8 [4.44]	1.8 [.07]	1.5 [.06]
202F242	35.6 [1.40]	22.1 [.87]	28.7 [1.13]	10.2 [.40]	159.5 [6.28]	130.8 [5.15]	1.8 [.07]	1.5 [.06]
202F253	38.9 [1.53]	28.2 [1.11]	31.5 [1.24]	10.9 [.43]	177.8 [7.00]	142.2 [5.60]	1.8 [.07]	1.5 [.06]
202F263	45.2 [1.78]	32.3 [1.27]	38.4 [1.51]	12.7 [.50]	203.2 [8.00]	163.1 [6.42]	1.8 [.07]	1.5 [.06]
202F274	51.6 [2.03]	41.1 [1.62]	45.5 [1.79]	15.0 [.59]	203.2 [8.00]	157.7 [6.21]	1.8 [.07]	1.8 [.07]

Note: Coating is optional. As supplied dimensions appearing in table are for uncoated parts. When coating is added, entry diameters will be reduced by 1.5 [.06] max.

Available in:	Americas	Europe	Asia Pacific
	■	■	■

Catalog 1654025
Revised 3-13

www.te.com

Dimensions are shown for reference purposes only. Specifications subject to change.

Dimensions are in millimeters unless otherwise specified.

USA: +1 800 522 6752
Asia Pacific: +86 0 400 820 6015
UK: +44 800 267 666

For additional support numbers please visit www.te.com

202G211 to 253

Straight, Low Profile Lipped Boot

As Supplied (a)

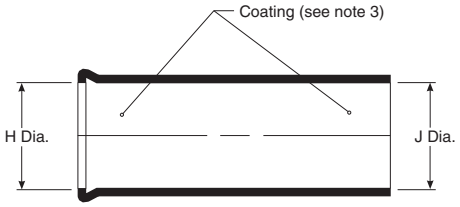

After Unrestricted Recovery (b)

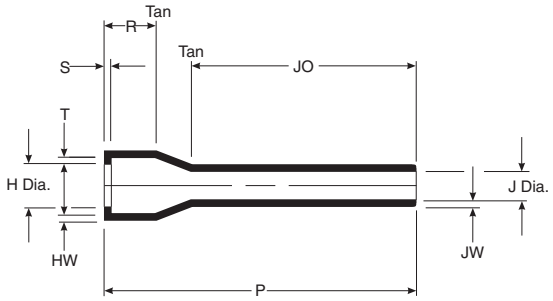

Applications

Use in conjunction with TE adapters to provide strain relief for harness systems using circular connectors. This range of parts is compatible with all grooved adapters of appropriate shell or entry size. When used with adhesive it provides environmental sealing.

Materials Available

Material Dash No.	Material Description	Adhesive
-55	Fluoroploymer	S-1255-04

Product Dimensions

Part No.	H Min. a	H Max. b	J Min. a	J Max. b	P ±10% b	R ±10% b	S Ref. b	T Ref. b	JO ±10% b	HW Ref. b	JW Ref. b
202G211	23.9 [.94]	9.9 [.39]	23.9 [.94]	7.4 [.29]	105.9 [4.17]	11.7 [.46]	1.0 [.04]	1.3 [.05]	86.4 [3.40]	1.0 [.04]	0.7 [.03]
202G221	27.2 [1.07]	13.2 [.52]	27.2 [1.07]	8.4 [.33]	121.2 [4.77]	12.2 [.48]	1.0 [.04]	1.3 [.05]	87.4 [3.44]	1.0 [.04]	0.7 [.03]
202G232	31.0 [1.22]	18.5 [.73]	31.0 [1.22]	9.4 [.37]	138.7 [5.46]	12.2 [.48]	1.0 [.04]	1.3 [.05]	104.4 [4.11]	1.0 [.04]	0.7 [.03]
202G242	31.7 [1.25]	22.1 [.87]	31.7 [1.25]	10.7 [.42]	159.5 [6.28]	12.2 [.48]	1.0 [.04]	1.5 [.06]	124.5 [4.90]	1.0 [.04]	0.7 [.03]
202G253	38.9 [1.53]	28.2 [1.11]	38.9 [1.53]	11.9 [.47]	177.8 [7.00]	10.6 [.42]	1.3 [.05]	1.8 [.07]	143.5 [5.65]	1.3 [.05]	1.0 [.04]

Available in:	Americas	Europe	Asia Pacific
	■	■	■

Catalog 1654025
Revised 3-13

www.te.com

Dimensions are shown for reference purposes only. Specifications subject to change.

Dimensions are in millimeters unless otherwise specified.

USA: +1 800 522 6752
Asia Pacific: +86 0 400 820 6015
UK: +44 800 267 666

For additional support numbers please visit www.te.com

202G611 to 653

Uniboot

As Supplied (a)

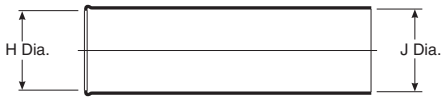

After Unrestricted Recovery (b)

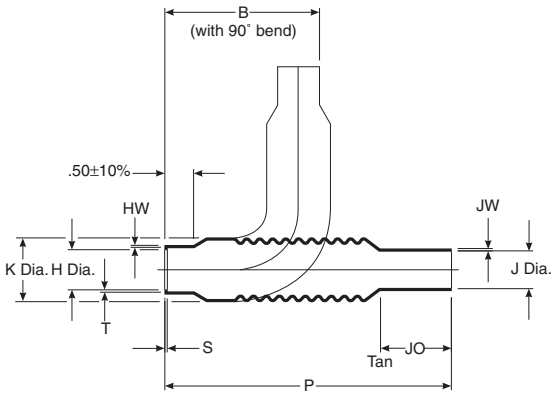

Applications

Use to provide abrasion protection for connectors. The flexibility of design allows a variety of cable outlet angles. When installed on a spin-coupling adapter, cold re-entry to the connector is possible by unscrewing the adapter and compressing the molded part. When used with adhesive it provides environmental sealing.

Materials Available

Material Dash No.	Material Description	Adhesive
-55	Fluoroploymer	S-1255-04

Product Dimensions

Part No.	H Min. a	H Max. b	J Min. a	J Max. b	K Max. b	P ±10% b	JO ±10% b	HW Ref. b	JW Ref. b	S Ref. b	T Ref. b	B Nom. b
202G611	14.2 [.56]	6.9 [.27]	11.2 [.44]	4.8 [.19]	21.1 [.83]	120.7 [4.75]	17.5 [.69]	1.0 [.04]	0.7 [.03]	1.0 [.04]	1.3 [.05]	62.5 [2.46]
202G621	26.6 [1.05]	11.7 [.46]	26.6 [1.05]	8.1 [.32]	26.6 [1.05]	133.8 [5.27]	19.9 [.78]	1.0 [.04]	0.7 [.03]	1.0 [.04]	1.3 [.05]	67.8 [2.67]
202G632	33.0 [1.30]	17.5 [.69]	33.0 [1.30]	12.7 [.50]	32.7 [1.29]	151.1 [5.95]	22.4 [.88]	1.0 [.04]	0.7 [.03]	1.0 [.04]	1.3 [.05]	73.4 [2.89]
202G642	35.5 [1.40]	22.3 [.88]	35.5 [1.40]	17.5 [.69]	37.8 [1.49]	157.2 [6.19]	25.4 [1.00]	1.3 [.05]	1.0 [.04]	1.3 [.05]	1.3 [.05]	78.2 [3.08]
202G653	42.6 [1.68]	27.9 [1.10]	42.6 [1.68]	22.4 [.88]	42.9 [1.69]	170.2 [6.70]	28.4 [1.12]	1.3 [.05]	1.0 [.04]	1.3 [.05]	1.5 [.06]	82.8 [3.26]

Available in:	Americas	Europe	Asia Pacific
	■	■	■

Catalog 1654025
Revised 3-13

www.te.com

Dimensions are shown for reference purposes only. Specifications subject to change.

Dimensions are in millimeters unless otherwise specified.

USA: +1 800 522 6752
Asia Pacific: +86 0 400 820 6015
UK: +44 800 267 666

For additional support numbers please visit www.te.com

202K121 to 185

Straight, Lipped Boot

As Supplied (a)

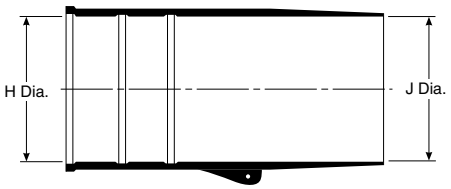

After Unrestricted Recovery (b)

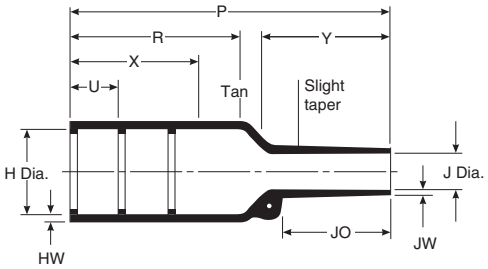

202K121 - 153 = 2 lips
202K163 - 185 = 3 lips

Mod 01 = 1 lip removed
Mod 02 = 2 lips removed
(only available in sizes 163, 174, 185).
For eyelet clip, order CS-1858 option.

Applications

Use in conjunction with TE adapters to provide strain relief for harness systems using circular connectors. Boot is compatible with all grooved adapters of the appropriate shell size.

Materials Available

Material*	Material Description	Precoating No.	Adhesive Part No.**
-3	Semirigid polyolefin	/42 or /86	S-1017 or S-1048
-4	Flexible polyolefin	/42 or /86	S-1017 or S-1048
-12	Fluoroelastomer	N/A	S-1255-04
-25	Fluid-resistant elastomer	/42 or /86 or /225	S-1017 or S-1048 or S-1125
-100	Polyolefin, Zerohal	/86 or /180	S-1048 or S-1030

*For more information, please see the appropriate material page in this section.
**For more information, please see section 5.

Product Dimensions

Part No.	H Min. -3,-4,-12,-25 a	H Min. -100 a	H Max. b	J Min. -3, -4, -25 a	J Min. -12 a	J Min. -100 a	J Max. b	P ±10% b	R ±10% b	U ±10% b	JO ±10% b	HW ±20% b	JW Min. b	X ±20% b	Y ±20% b
202K121	24.0 [.95]	24.0 [.95]	10.4 [.41]	24.0 [.95]	13.0 [.51]	14.0 [.55]	5.6 [.22]	38.0 [1.50]	21.0 [.83]	12.0 [.47]	8.5 [.33]	1.6 [.06]	.41 [.016]	24.0 [.94]	13.0 [.51]
202K132	30.0 [1.18]	30.0 [1.18]	14.2 [.56]	30.0 [1.18]	14.0 [.55]	15.0 [.59]	5.9 [.23]	55.0 [2.17]	32.0 [1.26]	12.0 [.47]	11.5 [.45]	1.8 [.07]	.81 [.032]	24.0 [.94]	18.0 [.71]
202K142	31.0 [1.22]	31.0 [1.22]	18.0 [.71]	31.0 [1.22]	16.0 [.63]	18.0 [.71]	7.1 [.28]	67.0 [2.64]	35.0 [1.38]	20.0 [.79]	17.0 [.67]	1.8 [.07]	.81 [.032]	32.0 [1.26]	25.0 [.98]
202K153	36.0 [1.42]	36.0 [1.42]	22.4 [.88]	36.0 [1.42]	19.0 [.75]	21.0 [.83]	8.4 [.33]	80.0 [3.15]	42.0 [1.65]	20.0 [.79]	19.5 [.76]	2.0 [.08]	.81 [.032]	32.0 [1.26]	30.0 [1.18]
202K163	43.0 [1.69]	43.0 [1.69]	28.2 [1.11]	43.0 [1.69]	22.0 [.87]	25.0 [.98]	9.9 [.39]	99.0 [3.90]	61.0 [2.40]	20.0 [.79]	21.0 [.82]	2.2 [.08]	.81 [.032]	52.0 [2.05]	30.0 [1.18]
202K174	60.0 [2.36]	52 [12.05]	35.1 [1.38]	60.0 [2.36]	35.0 [1.38]	39.0 [1.54]	15.7 [.62]	130.0 [5.12]	72.0 [2.83]	20.0 [.79]	39.0 [1.53]	3.3 [.13]	1.02 [.040]	52.0 [2.05]	50.0 [1.97]
202K185	66.0 [2.60]	66 [12.60]	44.5 [1.75]	66.0 [2.60]	38.0 [1.50]	42.0 [1.65]	16.8 [.66]	170.0 [6.69]	90.0 [3.54]	20.0 [.79]	51.5 [2.02]	3.8 [.15]	1.63 [.064]	52.0 [2.05]	70.0 [2.76]

Note: Coating is optional. As supplied dimensions appearing in table are for uncoated parts. When coating is added, entry diameters will be reduced by 1.5 [.06] max.

Available in:	Americas	Europe	Asia Pacific
	■	■	■

Catalog 1654025
Revised 3-13

www.te.com

Dimensions are shown for reference purposes only. Specifications subject to change.

Dimensions are in millimeters unless otherwise specified.

USA: +1 800 522 6752
Asia Pacific: +86 0 400 820 6015
UK: +44 800 267 666

For additional support numbers please visit www.te.com

214A011 to 052

D-Subminiature, Straight Boot

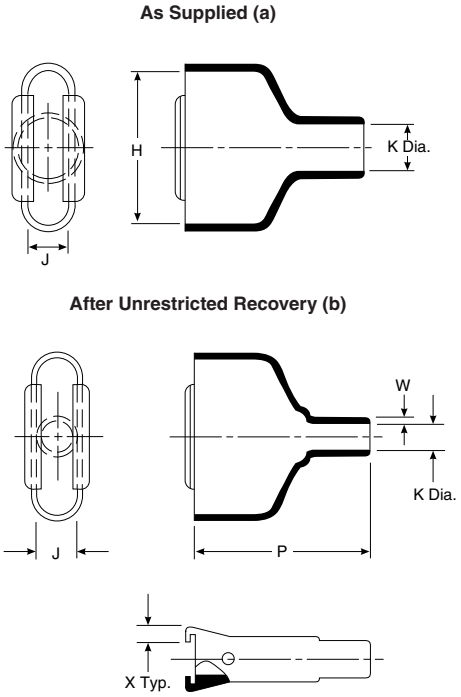

Applications

Provides strain relief and mechanical protection on D-subminiature connector terminations.

Materials Available

Material*	Material Description	Precoating No.	Adhesive Part No.**
-3	Semirigid polyolefin	/42 or /86	S-1017 or S-1048
-4	Flexible polyolefin	/42 or /86	S-1017 or S-1048
-12	Fluoroelastomer	N/A	S-1255-04
-25	Fluid-resistant elastomer	/42 or /86 or /225	S-1017 or S-1048 or S-1125
-100	Polyolefin, Zerohal	/86 or /180	S-1048 or S-1030

*For more information, please see the appropriate material page in this section.
**For more information, please see section 5.

Product Dimensions

Part No.	H		J		K		P	W	X	This Boot Fits	
	±5% a	±5% b	±5% a	±5% b	Min. a	Max. b	±10% b	±20% b	±20% b	Cannon/ Cinch	Amphenol Series 17
214A011	20.3 [.80]	20.3 [.80]	10.7 [.42]	10.7 [.42]	7.9 [.31]	4.1 [.16]	33.3 [1.31]	1.0 [.04]	3.0 [.12]	DE-9	XX09X
214A021	28.2 [1.11]	28.2 [1.11]	10.7 [.42]	10.7 [.42]	10.2 [.40]	5.3 [.21]	38.9 [1.53]	1.0 [.04]	3.0 [.12]	DA-15	XX15X
214A032	42.2 [1.66]	42.2 [1.66]	10.7 [.42]	10.7 [.42]	14.0 [.55]	8.1 [.32]	45.0 [1.77]	1.0 [.04]	3.0 [.12]	DB-25	XX25X
214A042	58.7 [2.31]	58.7 [2.31]	10.7 [.42]	10.7 [.42]	17.3 [.68]	8.6 [.34]	53.3 [2.10]	1.0 [.04]	3.0 [.12]	DC-37	XX37X
214A052	57.9 [2.28]	57.9 [2.28]	13.7 [.54]	13.7 [.54]	19.1 [.75]	10.7 [.42]	61.0 [2.40]	1.0 [.04]	3.0 [.12]	DD-50	XX50X

Note: Coating is optional. As supplied dimensions appearing in table are for uncoated parts. When coating is added, entry diameters will be reduced by 1.5 [.06] max.

Available in:	Americas	Europe	Asia Pacific
	■	■	■

Catalog 1654025
Revised 3-13

www.te.com

Dimensions are shown for reference purposes only. Specifications subject to change.

Dimensions are in millimeters unless otherwise specified.

USA: +1 800 522 6752
Asia Pacific: +86 0 400 820 6015
UK: +44 800 267 666

For additional support numbers please visit www.te.com

214A311 to 352

D-Subminiature, Straight Boot

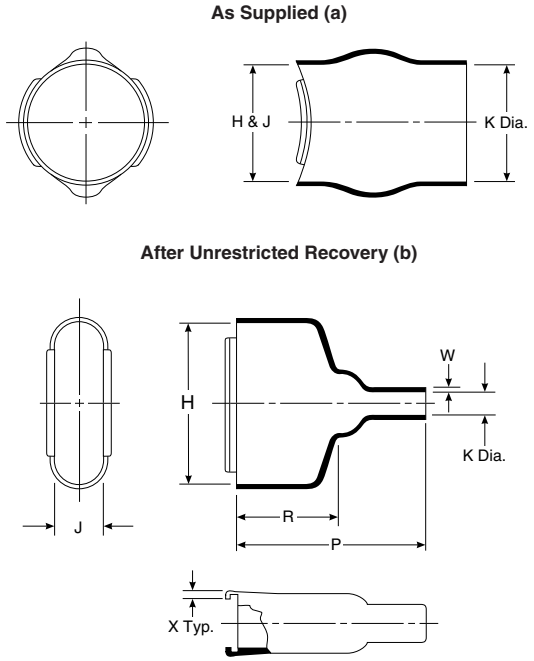

Applications

Provides strain relief and mechanical protection on D-subminiature connector terminations.

Materials Available

Material*	Material Description	Precoating No.	Adhesive Part No.**
-3	Semirigid polyolefin	/42 or /86	S-1017 or S-1048
-4	Flexible polyolefin	/42 or /86	S-1017 or S-1048
-25	Fluid-resistant elastomer	/42 or /86	S-1017 or S-1048 or S-1125

*For more information, please see the appropriate material page in this section.
**For more information, please see section 5.

Product Dimensions

Part No.	H		J		K		P	R	W	X	This Boot Fits	
	±5% a	±5% b	±5% a	±5% b	Min. a	Max. b	±10% b	±10% b	±20% b	±20% b	Cannon/ Cinch	Amphenol Series 17
214A311	16.0 [.63]	20.3 [.80]	16.0 [.63]	10.7 [.42]	16.0 [.63]	4.1 [.16]	33.3 [1.31]	19.1 [.75]	1.02 [.04]	3.05 [.12]	DE-9	XX09X
214A321	19.1 [.75]	28.2 [1.11]	19.1 [.75]	10.7 [.42]	19.1 [.75]	5.3 [.21]	38.9 [1.53]	22.1 [.87]	1.02 [.04]	3.05 [.12]	DA-15	XX15X
214A332	29.2 [1.15]	42.2 [1.66]	29.2 [1.15]	10.7 [.42]	29.2 [1.15]	8.1 [.32]	45.0 [1.77]	25.4 [1.00]	1.02 [.04]	3.05 [.12]	DB-25	XX25X
214A342	34.3 [1.35]	58.7 [2.31]	34.3 [1.35]	10.7 [.42]	34.3 [1.35]	8.6 [.34]	53.3 [2.10]	28.4 [1.12]	1.02 [.04]	3.05 [.12]	DC-37	XX37X
214A352	37.6 [1.48]	57.9 [2.28]	37.6 [1.48]	13.7 [.54]	37.6 [1.48]	10.7 [.42]	61.0 [2.40]	31.8 [1.25]	1.02 [.04]	3.05 [.12]	DD-50	XX50X

Note: Coating is optional. As supplied dimensions appearing in table are for uncoated parts. When coating is added, entry diameters will be reduced by 1.5 [.06] max.

Available in:	Americas	Europe	Asia Pacific
	■	■	■

Catalog 1654025
Revised 3-13

www.te.com

Dimensions are shown for reference purposes only. Specifications subject to change.

Dimensions are in millimeters unless otherwise specified.

USA: +1 800 522 6752
Asia Pacific: +86 0 400 820 6015
UK: +44 800 267 666

For additional support numbers please visit www.te.com

222A111 to 196

Right-Angled Boot

As Supplied (a)

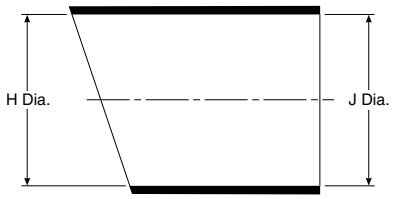

After Unrestricted Recovery (b)

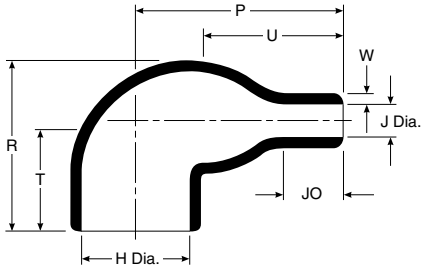

Applications

Use for mechanical protection and connector-cable strain relief. This family of boots has no lip, so a boot can be installed directly onto the connector accessory thread.

Materials Available

Material*	Material Description	Precoating No.	Adhesive Part No.**
-3	Semirigid polyolefin	/42 or /86	S-1017 or S-1048
-4	Flexible polyolefin	/42 or /86	S-1017 or S-1048
-12	Fluoroelastomer	N/A	S-1255-04
-25	Fluid-resistant elastomer	/42 or /86 or /225	S-1017 or S-1048 or S-1125
-100	Polyolefin, Zerohal	/86 or/180	S-1048 or S-1030

*For more information, please see the appropriate material page in this section.
**For more information, please see section 5.

Product Dimensions

Part No.	H Min. a	H Max. b	J Min. -3, -4, -25 a	J Min. -100 a	J Min. -12 a	J Max. b	P ±10% b	R ±10% b	T ±10% b	U ±10% b	JO ±10% b	W ±20% b
222A111	17.8 [.70]	7.9 [.31]	17.8 [.70]	10.9 [.43]	9.9 [.39]	3.8 [.15]	17.3 [.68]	20.1 [.79]	—	11.4 [.45]	4.3 [.17]	1.02 [.04]
222A121	24.9 [.98]	10.2 [.40]	24.9 [.98]	16.0 [.63]	18.0 [.71]	5.3 [.21]	21.3 [.84]	22.6 [.89]	—	14.7 [.58]	5.8 [.23]	1.27 [.05]
222A132	30.0 [1.18]	14.2 [.56]	30.0 [1.18]	21.1 [.83]	20.6 [.81]	6.4 [.25]	26.9 [1.06]	26.7 [1.05]	19.1 [.75]	17.8 [.70]	7.1 [.28]	1.52 [.06]
222A142	32.5 [1.28]	17.3 [.68]	32.5 [1.28]	22.9 [.90]	22.9 [.90]	6.9 [.27]	36.6 [1.44]	30.5 [1.20]	19.1 [.75]	24.9 [.98]	10.2 [.40]	1.78 [.07]
222A152	36.1 [1.42]	21.8 [.86]	36.1 [1.42]	27.4 [1.08]	26.4 [1.04]	8.4 [.33]	43.7 [1.72]	35.1 [1.38]	19.1 [.75]	30.0 [1.18]	12.7 [.50]	1.78 [.07]
222A163	43.9 [1.73]	27.4 [1.08]	43.9 [1.73]	28.4 [1.12]	27.4 [1.08]	9.4 [.37]	53.6 [2.11]	43.9 [1.73]	19.1 [.75]	34.0 [1.34]	17.3 [.68]	2.03 [.08]
222A174	53.1 [2.09]	33.8 [1.33]	53.1 [2.09]	48.3 [1.90]	46.7 [1.84]	15.0 [.59]	75.7 [2.98]	52.8 [2.08]	25.4 [1.00]	53.3 [2.10]	32.0 [1.26]	3.30 [.13]
222A185	67.6 [2.66]	44.2 [1.74]	67.6 [2.66]	58.4 [2.30]	54.4 [2.14]	20.3 [.80]	97.5 [3.84]	66.0 [2.60]	25.4 [1.00]	71.1 [2.80]	40.6 [1.60]	3.81 [.15]
222A196	87.6 [3.45]	55.4 [2.18]	87.6 [3.45]	68.8 [2.71]	63.0 [2.48]	23.4 [.92]	128.0 [5.04]	79.2 [3.12]	25.4 [1.00]	87.6 [3.45]	56.4 [2.22]	4.57 [.18]

Note: Coating is optional. As supplied dimensions appearing in table are for uncoated parts. When coating is added, entry diameters will be reduced by 1.5 [.06] max.

Available in:	Americas	Europe	Asia Pacific
	■	■	■

Catalog 1654025
Revised 3-13

www.te.com

Dimensions are shown for reference purposes only. Specifications subject to change.

Dimensions are in millimeters unless otherwise specified.

USA: +1 800 522 6752
Asia Pacific: +86 0 400 820 6015
UK: +44 800 267 666

For additional support numbers please visit www.te.com

222D121 to 196

Right-Angled, Lipped Boot

As Supplied (a)

After Unrestricted Recovery (b)

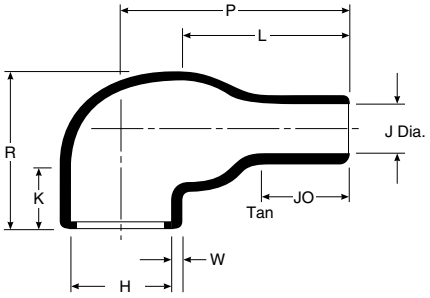

Applications

Use in conjunction with TE adapters to provide strain relief for harness systems using circular connectors. Boot is compatible with all grooved adapters of the appropriate shell size.

Materials Available

Material*	Material Description	Precoating No.	Adhesive Part No.**
-3	Semirigid polyolefin	/42 or /86	S-1017 or S-1048
-4	Flexible polyolefin	/42 or /86	S-1017 or S-1048
-12	Fluoroelastomer	N/A	S-1255-04
-25	Fluid-resistant elastomer	/42 or /86 or /225	S-1017 or S-1048 or S-1125
-100	Polyolefin, Zerohal	/86 or /180	S-1048 or S-1030

*For more information, please see the appropriate material page in this section.
**For more information, please see section 5.

Product Dimensions

Part No.	H Min. a	H Max. a	J Min. -3, -4, -25 b	J Min. -100 b	J Min. -12 b	J Max. b	P ±10% b	R Ref. b	JO ±10%	W ±20%	K ±10% b	L ±10% b
222D121	23.4 [.92]	10.4 [.41]	23.4 [.92]	14.0 [.55]	12.4 [.49]	5.6 [.22]	21.3 [.84]	22.6 [.89]	5.8 [.23]	1.27 [.05]	15.2 [.60]	14.7 [.58]
222D132	28.4 [1.12]	14.2 [.56]	28.4 [1.12]	15.0 [.59]	14.7 [.58]	6.6 [.26]	33.8 [1.33]	27.2 [1.07]	15.5 [.65]	1.52 [.06]	19.1 [.75]	24.9 [.98]
222D142	31.0 [1.22]	17.8 [.70]	31.0 [1.22]	18.0 [.71]	16.0 [.63]	7.1 [.28]	36.6 [1.44]	31.0 [1.22]	12.7 [.50]	1.78 [.07]	19.1 [.75]	24.9 [.98]
222D152	36.0 [1.42]	22.4 [.88]	36.0 [1.42]	21.0 [.83]	18.5 [.73]	8.4 [.33]	43.7 [1.72]	35.1 [1.38]	14.5 [.57]	1.78 [.07]	19.1 [.75]	30.0 [1.18]
222D163	42.7 [1.68]	28.2 [1.11]	42.7 [1.68]	25.0 [.98]	22.1 [.87]	9.9 [.39]	53.6 [2.11]	43.9 [1.73]	17.5 [.69]	2.03 [.08]	19.3 [.76]	33.0 [1.30]
222D174	51.8 [2.04]	35.1 [1.38]	51.8 [2.04]	39.0 [1.54]	35.3 [1.39]	15.7 [.62]	78.0 [3.07]	52.8 [2.08]	33.5 [1.32]	3.30 [.13]	25.4 [1.00]	53.8 [2.12]
222D185	66.0 [2.60]	44.5 [1.75]	66.0 [2.60]	42.0 [1.65]	45.7 [1.80]	20.3 [.80]	97.5 [3.84]	66.0 [2.60]	40.1 [1.58]	3.81 [.15]	25.4 [1.00]	71.1 [2.80]
222D196	81.8 [3.22]	60.5 [2.38]	81.8 [3.22]	57.2 [2.25]	57.2 [2.25]	25.4 [1.00]	117.9 [4.64]	83.8 [3.30]	38.1 [1.50]	4.06 [.16]	25.4 [1.00]	80.0 [3.15]

Note: Coating is optional. As supplied dimensions appearing in table are for uncoated parts. When coating is added, entry diameters will be reduced by 1.5 (.06) max.

Available in:	Americas	Europe	Asia Pacific
	■	■	■

Catalog 1654025
Revised 3-13

www.te.com

Dimensions are shown for reference purposes only. Specifications subject to change.

Dimensions are in millimeters unless otherwise specified.

USA: +1 800 522 6752
Asia Pacific: +86 0 400 820 6015
UK: +44 800 267 666

For additional support numbers please visit www.te.com

222D211 to 299

Right-Angled, Lipped Boot

As Supplied (a)

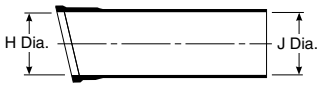

After Unrestricted Recovery (b)

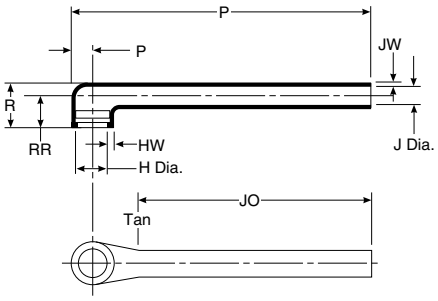

Applications

Provides strain relief and mechanical protection between cable and connector. Boot is usually used on open-wire-bundle airborne harnesses, or applications where the long tail replaces cable jacketing removed during termination.

Materials Available

Material*	Material Description	Precoating No.	Adhesive Part No.**
-3	Semirigid polyolefin	/42 or /86	S-1017 or S-1048
-4	Flexible polyolefin	/42 or /86	S-1017 or S-1048
-12	Fluoroelastomer	N/A	S-1255-04
-25	Fluid-resistant elastomer	/42 or /86 or /225	S-1017 or S-1048 or S-1125
-100	Polyolefin, Zerohal	/86 or /180	S-1048 or S-1030

*For more information, please see the appropriate material page in this section.
**For more information, please see section 5.

Product Dimensions

Part No.	H Min. a	H Max. b	J Min. -3, -4, -25 a	J Min. -12, -100 b	J Max. b	P ±10% b	R Ref b	JO ±10% b	PP ±10% b	RR 10% b	HW ±20%	JW ±20%
222D211	22.4 [.88]	11.4 [.45]	22.4 [.88]	14.0 [.55]	6.4 [.25]	105.2 [4.14]	18.5 [.73]	87.6 [3.45]	6.9 [.27]	12.4 [.49]	1.52 [.06]	1.14 [.045]
222D221	25.7 [1.01]	15.0 [.59]	25.7 [1.01]	16.0 [.63]	7.4 [.29]	124.0 [4.88]	19.8 [.78]	99.1 [3.90]	8.4 [.33]	15.0 [.59]	1.52 [.06]	1.14 [.045]
222D232	29.5 [1.16]	18.8 [.74]	29.5 [1.16]	18.3 [.72]	8.4 [.33]	146.3 [5.76]	20.8 [.82]	114.3 [4.50]	10.4 [.41]	15.5 [.61]	1.78 [.07]	1.14 [.045]
222D242	34.0 [1.34]	22.9 [.90]	34.0 [1.34]	21.3 [.84]	9.7 [.38]	172.2 [6.78]	21.8 [.86]	132.6 [5.22]	12.2 [.48]	15.7 [.62]	1.78 [.07]	1.14 [.045]
222D253	37.3 [1.47]	29.5 [1.16]	37.3 [1.47]	23.1 [.91]	10.4 [.41]	185.2 [7.29]	24.4 [.96]	143.8 [5.66]	15.5 [.61]	17.8 [.70]	2.03 [.08]	1.14 [.045]
222D263	43.7 [1.72]	34.0 [1.34]	43.7 [1.72]	27.2 [1.07]	12.2 [.48]	231.6 [8.41]	27.4 [1.08]	169.2 [6.66]	18.3 [.72]	19.8 [.78]	2.03 [.08]	1.14 [.045]
222D274	50.0 [1.97]	41.1 [1.62]	50.0 [1.97]	31.5 [1.24]	14.2 [.56]	224.5 [8.84]	29.5 [1.16]	173.2 [6.82]	21.1 [.83]	20.8 [.82]	2.29 [.09]	1.40 [.055]
222D285	62.7 [2.47]	47.0 [1.85]	62.7 [2.47]	39.1 [1.54]	17.5 [.69]	227.3 [8.95]	33.3 [1.31]	168.1 [6.62]	24.1 [.95]	23.4 [.92]	2.54 [.10]	1.40 [.055]
222D296	69.3 [2.73]	59.7 [2.35]	69.3 [2.73]	43.2 [1.70]	19.6 [.77]	233.4 [9.19]	35.1 [1.38]	157.2 [6.19]	30.0 [1.18]	23.6 [.93]	2.54 [.10]	1.40 [.055]
222D299	81.8 [3.22]	67.1 [2.64]	81.8 [3.22]	51.1 [2.01]	22.9 [.90]	237.0 [9.33]	44.5 [1.75]	151.1 [5.95]	33.3 [1.31]	31.2 [1.23]	2.54 [.10]	1.40 [.055]

Note: Coating is optional. As supplied dimensions appearing in table are for uncoated parts. When coating is added, entry diameters will be reduced by 1.5 [.06] max.

Available in:	Americas	Europe	Asia Pacific
	■	■	■

Catalog 1654025
Revised 3-13

www.te.com

Dimensions are shown for reference purposes only. Specifications subject to change.

Dimensions are in millimeters unless otherwise specified.

USA: +1 800 522 6752
Asia Pacific: +86 0 400 820 6015
UK: +44 800 267 666

For additional support numbers please visit www.te.com

222D921 to 963

Right-Angled, Lipped Boot

As Supplied (a)

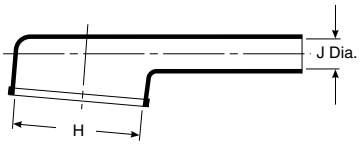

After Unrestricted Recovery (b)

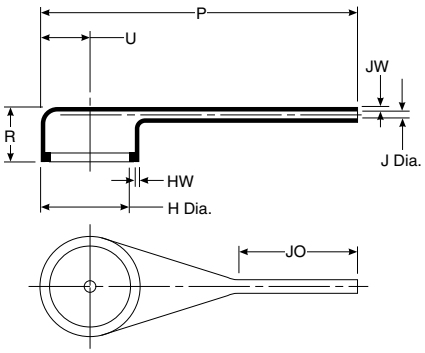

Applications

Provides strain relief and mechanical protection between cable and connector. It is used in applications where only a small number of the available contacts are utilized, resulting in a high ratio between the adapter and cable diameters.

Materials Available

Material*	Material Description	Precoating No.	Adhesive Part No.**
-3	Semirigid polyolefin	/42 or /86	S-1017 or S-1048
-4	Flexible polyolefin	/42 or /86	S-1017 or S-1048
-12	Fluoroelastomer	N/A	S-1255-04
-25	Fluid-resistant elastomer	/42 or /86 or /225	S-1017 or S-1048 or S-1125
-100	Polyolefin, Zerohal	/86 or /180	S-1048 or S-1030

Product Dimensions

Part No.	H		J			P	R	U	JO	HW	JW
	Min. a	Max. b	Min. -3, -4, -25 a	Min. -12, -100 a	Max. b	±10% b	Ref. b	±10% b	±10% b	±20% b	±20% b
222D921	19.3 [.76]	13.0 [.51]	6.3 [.25]	4.5 [.18]	2.1 [.08]	44.5 [1.75]	16.3 [.64]	5.6 [.22]	21.8 [.86]	1.52 [.06]	1.14 [.045]
222D932	26.1 [1.03]	19.1 [.75]	7.6 [.30]	5.6 [.22]	2.6 [.10]	67.3 [2.65]	18.0 [.71]	8.4 [.33]	29.2 [1.15]	1.78 [.07]	1.14 [.045]
222D953	34.2 [1.35]	26.0 [1.02]	9.6 [.38]	6.6 [.26]	3.0 [.12]	81.3 [3.20]	18.8 [.74]	11.4 [.45]	36.3 [1.39]	1.78 [.07]	1.14 [.045]
222D963	43.6 [1.72]	34.1 [1.34]	11.4 [.45]	7.8 [.31]	3.6 [.14]	115.6 [4.55]	21.3 [.84]	15.5 [.61]	47.0 [1.85]	1.78 [.07]	1.14 [.045]

Note: Coating is optional. As supplied dimensions appearing in table are for uncoated parts. When coating is added, entry diameters will be reduced by 1.5 mm [.06"] max.

Available in:	Americas	Europe	Asia Pacific
	■	■	■

Catalog 1654025
Revised 3-13

www.te.com

Dimensions are shown for reference purposes only. Specifications subject to change.

Dimensions are in millimeters unless otherwise specified.

USA: +1 800 522 6752
Asia Pacific: +86 0 400 820 6015
UK: +44 800 267 666

For additional support numbers please visit www.te.com

222F211 to 285

Right-Angled, Lipped Boot

As Supplied (a)

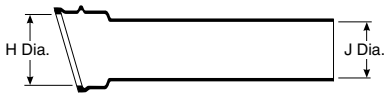

After Unrestricted Recovery (b)

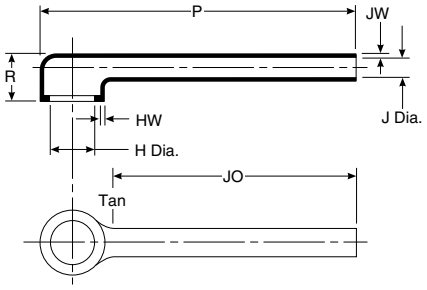

Applications

Use in conjunction with TE adapters to provide strain relief for harness systems using circular connectors. Boot is compatible with all grooved adapters of the appropriate shell size.

Materials Available

Material*	Material Description	Precoating No.	Adhesive Part No.**
-50	Fluoroelastomer polymer blend	N/A	S-1125
-51	Elastomer polymer blend	/164	S-1124
-71	Flexible polyolefin	/42 or /86	S-1017 or S-1048

*For more information, please see the appropriate material page in this section.
**For more information, please see section 5.

Product Dimensions

Part No.	H Min. a	H Max. b	J Min. a	J Max. b	P ±10% b	R ±10% b	JO ±10% b	HW +.06 to -.03 b	JW ±.03 b
222F211	23.9 [.94]	9.9 [.39]	17.3 [.68]	6.6 [.26]	105.2 [4.14]	18.5 [.73]	87.6 [3.45]	1.52 [.06]	1.52 [.06]
222F221	27.2 [1.07]	13.2 [.52]	20.8 [.82]	7.6 [.30]	124.0 [4.88]	19.8 [.78]	99.1 [3.90]	1.52 [.06]	1.52 [.06]
222F232	31.0 [1.22]	18.5 [.73]	24.4 [.96]	8.9 [.35]	146.3 [5.76]	20.8 [.82]	114.3 [4.50]	1.78 [.07]	1.52 [.06]
222F242	35.6 [1.40]	22.1 [.87]	28.7 [1.13]	10.2 [.40]	172.2 [6.78]	21.8 [.86]	132.6 [5.22]	1.78 [.07]	1.52 [.06]
222F253	38.9 [1.53]	28.2 [1.11]	31.5 [1.24]	10.9 [.43]	185.2 [7.29]	24.4 [.96]	143.8 [5.66]	1.78 [.07]	1.52 [.06]
222F263	45.2 [1.78]	32.3 [1.27]	38.4 [1.51]	12.7 [.50]	213.6 [8.41]	27.4 [1.08]	169.2 [6.66]	1.78 [.07]	1.52 [.06]
222F274	51.6 [2.03]	41.1 [1.62]	44.5 [1.75]	15.0 [.59]	224.5 [8.84]	29.5 [1.16]	173.2 [6.82]	1.78 [.07]	1.78 [.07]
222F285	62.7 [2.47]	42.9 [1.69]	47.2 [1.86]	17.5 [.69]	227.3 [8.95]	33.3 [1.31]	168.1 [6.62]	2.03 [.08]	1.78 [.07]

Note: Coating is optional. As supplied dimensions appearing in table are for uncoated parts. When coating is added, entry diameters will be reduced by 1.5 [.06] max.

Available in:	Americas	Europe	Asia Pacific
	■	■	■

Catalog 1654025
Revised 3-13

www.te.com

Dimensions are shown for reference purposes only. Specifications subject to change.

Dimensions are in millimeters unless otherwise specified.

USA: +1 800 522 6752
Asia Pacific: +86 0 400 820 6015
UK: +44 800 267 666

For additional support numbers please visit www.te.com

222K121 to 185

Right-Angled, Lipped Boot

As Supplied (a)

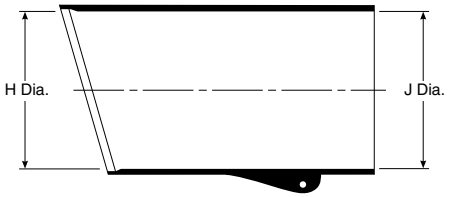

After Unrestricted Recovery (b)

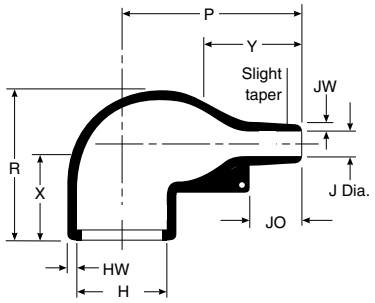

For eyelet clip, order CS-1858 option.

Applications

Use in conjunction with TE adapters to provide strain relief for harness systems using circular connectors. Boot is compatible with all grooved adapters of the appropriate shell size.

Materials Available

Material*	Material Description	Precoating No.	Adhesive Part No.**
-3	Semirigid polyolefin	/42 or /86	S-1017 or S-1048
-4	Flexible polyolefin	/42 or /86	S-1017 or S-1048
-12	Fluoroelastomer	N/A	S-1255-04
-25	Fluid-resistant elastomer	/42 or /86 or /225	S-1017 or S-1048 or S-1125
-100	Polyolefin, Zerohal	/86 or /180	S-1048 or S-1030

*For more information, please see the appropriate material page in this section.
**For more information, please see section 5.

Product Dimensions

Part No.	H Min. -3, -4, -12, -25 a	H Min. -100 a	H Max. b	J Min. -3, -4, -25 a	J Min. -12, -100 a	J Max. b	P ±10% b	R ±10% b	JO ±10% b	HW ±20% b	JW ±20% b	X ±20% b	Y ±20% b
222K121	24.0 [.95]	24.0 [.95]	10.4 [.41]	24.0 [.95]	14.0 [.55]	5.6 [.22]	25.0 [.98]	25.0 [.98]	8.5 [.33]	1.3 [.05]	.41 [.016]	18.0 [.71]	16.0 [.63]
222K132	30.0 [1.18]	30.0 [1.18]	14.2 [.56]	30.0 [1.18]	15.0 [.59]	5.9 [.23]	32.0 [1.26]	27.0 [1.06]	8.5 [.33]	1.5 [.06]	.61 [.024]	18.0 [.71]	20.0 [.79]
222K142	31.0 [1.22]	31.0 [1.22]	18.0 [.71]	31.0 [1.22]	18.0 [.71]	7.1 [.28]	39.0 [1.54]	31.0 [1.22]	15.0 [.59]	1.8 [.07]	.81 [.032]	18.0 [.71]	20.0 [.79]
222K152	36.0 [1.42]	36.0 [1.42]	22.4 [.88]	36.0 [1.42]	21.0 [.83]	8.4 [.33]	46.0 [1.81]	38.0 [1.50]	18.0 [.63]	1.8 [.07]	.81 [.032]	25.0 [.98]	25.0 [.98]
222K163	43.0 [1.69]	43.0 [1.69]	28.2 [1.11]	43.0 [1.69]	25.0 [.98]	9.9 [.39]	55.0 [2.17]	45.0 [1.77]	17.5 [.69]	2.0 [.08]	.81 [.032]	25.0 [.98]	30.0 [1.18]
222K174	60.0 [2.36]	52.0 [2.05]	35.1 [1.38]	60.0 [2.36]	39.0 [1.54]	15.7 [.62]	80.0 [3.15]	54.0 [2.13]	32.0 [1.26]	3.3 [.13]	1.02 [.040]	25.0 [.98]	45.0 [1.77]
222K185	66.0 [2.60]	66.0 [2.60]	44.5 [1.75]	66.0 [2.60]	42.0 [1.65]	16.8 [.66]	108.0 [4.25]	68.0 [2.68]	48.0 [1.89]	3.8 [.15]	1.63 [.064]	35.0 [1.38]	70.0 [2.76]

Note: Coating is optional. As supplied dimensions appearing in table are for uncoated parts. When coating is added, entry diameters will be reduced by 1.5 [.06] max.

Available in:	Americas	Europe	Asia Pacific
	■	■	■

Dimensions are shown for reference purposes only. Specifications subject to change.

Dimensions are in millimeters unless otherwise specified.

USA: +1 800 522 6752
Asia Pacific: +86 0 400 820 6015
UK: +44 800 267 666

For additional support numbers please visit www.te.com

234A011 to 071

D-Subminiature, Right-Angled Boot

As Supplied (a)

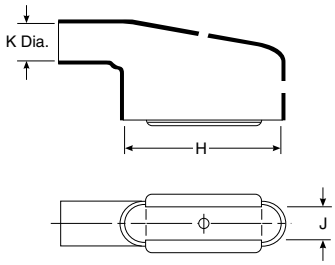

After Unrestricted Recovery (b)

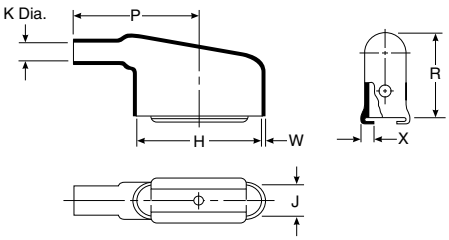

Applications

Provides strain relief and mechanical protection on D-subminiature connector terminations.

Materials Available

Material*	Material Description	Precoating No.	Adhesive Part No.**
-3	Semirigid polyolefin	/42 or /86	S-1017 or S-1048
-4	Flexible polyolefin	/42 or /86	S-1017 or S-1048
-12	Fluoroelastomer	N/A	S-1255-04
-25	Fluid-resistant elastomer	/42 or /86 or /225	S-1017 or S-1048 or S-1125
-100	Polyolefin, Zerohal	/86 or /180	S-1048 or S-1030

*For more information, please see the appropriate material page in this section.
**For more information, please see section 5.

Product Dimensions

Part No.	H ±5% a	H ±5% b	J ±5% a	J ±5% b	K Min. a	K Max. b	P ±10% b	R ±10% b	W ±20% b	X ±20% b	This Boot Fits Cannon/ Cinch
234A011	20.3 [.80]	20.3 [.80]	10.7 [.42]	10.7 [.42]	7.9 [.31]	4.1 [.16]	25.9 [1.02]	21.6 [.85]	1.02 [.04]	3.05 [.12]	DE-9
234A021	28.2 [1.11]	28.2 [1.11]	10.7 [.42]	10.7 [.42]	10.2 [.40]	5.3 [.21]	30.7 [1.21]	24.6 [.97]	1.02 [.04]	3.05 [.12]	DA-15
234A032	42.2 [1.66]	42.2 [1.66]	10.7 [.42]	10.7 [.42]	14.0 [.55]	7.4 [.29]	42.9 [1.69]	27.9 [1.10]	1.02 [.04]	3.05 [.12]	DB-25
234A042	58.7 [2.31]	58.7 [2.31]	10.7 [.42]	10.7 [.42]	17.3 [.68]	8.6 [.34]	53.3 [2.10]	30.5 [1.20]	1.02 [.04]	3.05 [.12]	DC-37
234A052	57.9 [2.28]	57.9 [2.28]	13.7 [.54]	13.7 [.54]	19.1 [.75]	10.7 [.42]	55.9 [2.20]	32.3 [1.27]	1.02 [.04]	3.05 [.12]	DD-50
234A061	20.3 [.80]	20.3 [.80]	10.7 [.42]	10.7 [.42]	7.9 [.31]	3.8 [.15]	25.9 [1.02]	18.5 [.73]	1.02 [.04]	3.05 [.12]	DE-9
234A071	28.2 [1.11]	28.2 [1.11]	10.7 [.42]	10.7 [.42]	10.2 [.40]	5.1 [.20]	30.7 [1.21]	19.8 [.78]	1.02 [.04]	3.05 [.12]	DA-15

Note: Coating is optional. As supplied dimensions appearing in table are for uncoated parts. When coating is added, entry diameters will be reduced by 1.5 (.06) max.

Available in:	Americas	Europe	Asia Pacific
	■	■	■

Catalog 1654025
Revised 3-13

www.te.com

Dimensions are shown for reference purposes only. Specifications subject to change.

Dimensions are in millimeters unless otherwise specified.

USA: +1 800 522 6752
Asia Pacific: +86 0 400 820 6015
UK: +44 800 267 666

For additional support numbers please visit www.te.com

234A111 to 152

D-Subminiature, Side-Entry Boot

As Supplied (a)

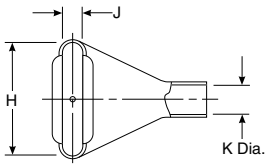

After Unrestricted Recovery (b)

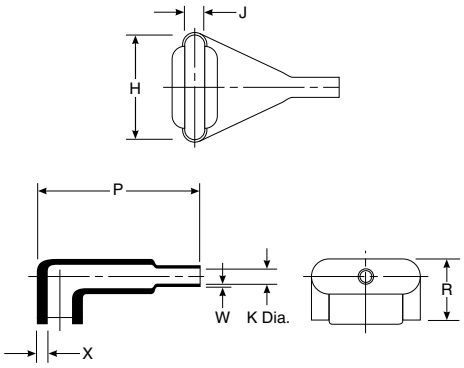

Applications

Provides strain relief and mechanical protection on D-subminiature connector terminations.

Materials Available

Material*	Material Description	Precoating No.	Adhesive Part No.**
-3	Semirigid polyolefin	/42 or /86	S-1017 or S-1048
-4	Flexible polyolefin	/42 or /86	S-1017 or S-1048
-25	Fluid-resistant elastomer	/42 or /86 or /225	S-1017 or S-1048 or S-1125

*For more information, please see the appropriate material page in this section.
**For more information, please see section 5.

Product Dimensions

Part No.	H ±5% a	H ±5% b	J ±5% a	J ±5% b	K Min. a	K Max. b	P ±10% b	R ±10% b	W ±20% b	X ±20% b	This Boot Fits Cannon/Cinch
234A111	20.3 [.80]	20.3 [.80]	10.7 [.42]	10.7 [.42]	7.9 [.31]	4.1 [.16]	27.9 [1.10]	18.5 [.73]	1.02 [.04]	3.05 [.12]	DE-9
234A121	28.2 [1.11]	28.2 [1.11]	10.7 [.42]	10.7 [.42]	10.2 [.40]	5.3 [.21]	35.1 [1.38]	18.8 [.74]	1.02 [.04]	3.05 [.12]	DA-15
234A132	42.2 [1.66]	42.2 [1.66]	10.7 [.42]	10.7 [.42]	14.0 [.55]	6.4 [.25]	47.5 [1.87]	20.1 [.79]	1.02 [.04]	3.05 [.12]	DB-25
234A142	58.7 [2.31]	58.7 [2.31]	10.7 [.42]	10.7 [.42]	17.3 [.68]	7.9 [.31]	59.7 [2.35]	20.1 [.79]	1.02 [.04]	3.05 [.12]	DC-37
234A152	57.9 [2.28]	57.9 [2.28]	13.7 [.54]	13.7 [.54]	19.1 [.75]	9.1 [.36]	63.2 [2.49]	26.4 [1.04]	1.02 [.04]	3.05 [.12]	DD-50

Note: Coating is optional. As supplied dimensions appearing in table are for uncoated parts. When coating is added, entry diameters will be reduced by 1.5 [.06] max.

Available in:	Americas	Europe	Asia Pacific
	■	■	■

Catalog 1654025
Revised 3-13

www.te.com

Dimensions are shown for reference purposes only. Specifications subject to change.

Dimensions are in millimeters unless otherwise specified.

USA: +1 800 522 6752
Asia Pacific: +86 0 400 820 6015
UK: +44 800 267 666

For additional support numbers please visit www.te.com

234A611 to 671

D-Subminiature, 90° End-Entry Boot

As Supplied (a)

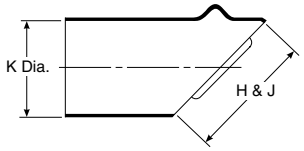

After Unrestricted Recovery (b)

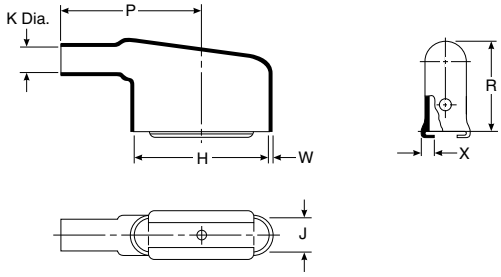

Applications

Provides strain relief and mechanical protection on D-subminiature connector terminations.

Materials Available

Material*	Material Description	Precoating No.	Adhesive Part No.**
-3	Semirigid polyolefin	/42 or /86	S-1017 or S-1048
-4	Flexible polyolefin	/42 or /86	S-1017 or S-1048
-25	Fluid-resistant elastomer	/42 or /86	S-1017 or S-1048 or S-1125

*For more information, please see the appropriate material page in this section.
**For more information, please see section 5.

Product Dimensions

Part No.	H ±5% a	H ±5% b	J ±5% a	J ±5% b	K Min. a	K Max. b	P ±10% b	R ±10% b	W ±20% b	X ±20% b	This Boot Fits Cannon/Cinch
234A611	16.0 [.63]	20.3 [.80]	16.0 [.63]	10.7[.42]	16.0 [.63]	4.1 [.16]	25.9 [1.02]	21.6 [.85]	1.02 [.04]	3.05 [.12]	DE-9
234A621	19.1 [.75]	28.2 [1.11]	19.1 [.75]	10.7 [.42]	19.1 [.75]	5.3 [.21]	30.7 [1.21]	24.6 [.97]	1.02 [.04]	3.05 [.12]	DA-15
234A632	29.2 [1.15]	42.2 [1.66]	29.2 [1.15]	10.7 [.42]	29.2 [1.15]	7.4 [.29]	42.9 [1.69]	27.9 [1.10]	1.02 [.04]	3.05 [.12]	DB-25
234A642	34.3 [1.35]	58.7 [2.31]	34.3 [1.35]	10.7 [.42]	34.3 [1.35]	8.6 [.34]	53.3 [2.10]	30.5 [1.20]	1.02 [.04]	3.05 [.12]	DC-37
234A652	37.6 [1.48]	57.9 [2.28]	37.6 [1.48]	13.7 [.54]	37.6 [1.48]	10.7 [.42]	55.9 [2.20]	32.3 [1.27]	1.02 [.04]	3.05 [.12]	DD-50
234A661	16.0 [.63]	20.3 [.80]	16.0 [.63]	10.7 [.42]	16.0 [.63]	3.8 [.15]	25.9 [1.02]	18.5 [.73]	1.02 [.04]	3.05 [.12]	DE-9
234A671	19.1 [.75]	28.2 [1.11]	19.1 [.75]	10.7 [.42]	19.1 [.75]	5.1 [.20]	30.7 [1.21]	19.8 [.78]	1.02 [.04]	3.05 [.12]	DA-15

Note: Coating is optional. As supplied dimensions appearing in table are for uncoated parts. When coating is added, entry diameters will be reduced by 1.5 [.06] max.

Available in:	Americas	Europe	Asia Pacific
	■	■	■

Dimensions are shown for reference purposes only. Specifications subject to change.

Dimensions are in millimeters unless otherwise specified.

USA: +1 800 522 6752
Asia Pacific: +86 0 400 820 6015
UK: +44 800 267 666

For additional support numbers please visit www.te.com

242W042 to 063

45° Angled Boot

As Supplied (a)

After Unrestricted Recovery (b)

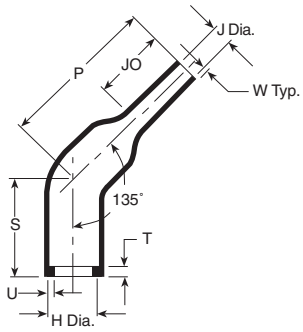

Applications

Designed for use in the aggressive environments found adjacent to engines in automotive, aerospace and military applications, heat-shrinkable molded parts provide rugged protection, strain relief and a full 360°environmental seal. The introduction of the 45° option means there is now a choice of three routes to the connector for closer positioning and greater design freedom.

Compatibility Chart

Material Dash Number	Material Description	Precoating No.	Adhesive Part No.
-3	Polyolefin, semirigid	/42, /86	S-1017 or S-1048
-4	Polyolefin, flexible	/42, /86	S-1017 or S-1048
-12	Fluoroelastomer	N/A	S-1255-04
-25	Elastomer, fluid-resistant	/42, /86, /225	S-1017, S-1125 or S-1048
-100	Polyolefin, Zerohal	/180	S-1030

Product Dimensions

Part No.	H		J			P	S	T	U	JO	W
	Min. a	Max. b	Min. a -12, -100	Min. a -3, -4, -25	Max. b -12, -100, -3, -25	± 10% b	± 10% b	± 10% b	± 10% b	± 10% b	± 20% b
242W042	31.0 [1.22]	17.9 [.70]	18.0 [.71]	31.0 [1.22]	7.0 [.28]	55.0 [2.17]	35.0 [1.38]	3.5 [.14]	2.0 [.08]	25.0 [.98]	1.8 [.07]
242W053	36.0 [1.42]	22.1 [.87]	21.0 [.83]	36.0 [1.42]	8.4 [.33]	60.0 [2.36]	40.0 [1.58]	3.5 [.14]	2.0 [.08]	30.0 [1.18]	2.0 [.08]
242W063	43.0 [1.69]	27.9 [1.10]	25.0 [.99]	43.0 [1.69]	9.9 [.39]	65.0 [2.56]	45.0 [1.77]	3.5 [.14]	2.0 [.08]	35.0 [1.38]	2.2 [.09]

As supplied dimensions are for uncoated parts, when coating is added, entry diameters will reduce by 1.5 [.06] max.

Available in:	Americas	Europe	Asia Pacific
	■	■	■

Dimensions are shown for reference purposes only. Specifications subject to change.

Dimensions are in millimeters unless otherwise specified.

USA: +1 800 522 6752
Asia Pacific: +86 0 400 820 6015
UK: +44 800 267 666

For additional support numbers please visit www.te.com

Micro Molded Shapes

Micro Molded Heat-Shrink Shapes

Connector manufacturers are increasingly offering smaller high performance, rugged, micro circular connectors for use in wiring harnesses in both civilian and defense markets.

The range of small heat-shrink molded shapes from TE Connectivity (TE) has evolved in order to cater for these requirements for smaller, lighter-weight products that still offer a great balance of protection properties at the connector-wire interface.

Produced in a variety of shapes and materials, TE's range of Raychem branded molded shapes are supplied in an expanded form. On the application of heat, they shrink to a pre-determined size and shape, providing a tough, protective covering for the components over which they are installed.

Product Facts

- **Small size**
- **Supplied in expanded form**
- **Adhesive lined options**
- **Strain relief**
- **Available in a range of different cross-linked polymeric materials**

Benefits

- **Weight and space savings**
- **Facilitates installation**
- **Environmental sealing against fluid and dirt ingression**
- **Provides protection against mechanical abuse at the cable-connector interface**
- **Suitable for a wide range of application and environmental requirements for low fire hazard, flame retardance, high temperatures and fluid resistant characteristics. Applications from underwater to outer space, in military vehicles to cars, rail and mass transit**

Catalog 1654025
Revised 3-13

www.te.com

Dimensions are shown for reference purposes only. Specifications subject to change.

Dimensions are in millimeters unless otherwise specified.

USA: +1 800 522 6752
Asia Pacific: +86 0 400 820 6015
UK: +44 800 267 666

For additional support numbers please visit www.te.com

Micro Molded Shapes (Continued)

Material

-25 Molded Part Material

A heat-shrinkable, semi-rigid, fluid and temperature resistant, elastomeric molding compound, designed to offer excellent performance in harsh environments. Ideal for use in military and commercial vehicles where high temperatures and long-term exposure to hot fluids is expected.

-100 Molded Part Material*

A heat-shrinkable, semi-flexible, low-fire-hazard molding compound designed to offer excellent fire safety characteristics combined with low smoke and low acid gas emission. 100 also exhibits good mechanical and fluid resistance properties.

-12 Molded Part Material*

A high-temperature, heat-shrinkable, flexible, flame-retarded, fluoroelastomeric molding compound with excellent resistance to long-term fluid immersion and heat exposure.

-3 Molded Part Material*

A general purpose, heat-shrinkable semi rigid and flame retarded polyolefin molding compound with good resistance to fluids and heat.

Min = Minimum inner diameter of the supplied expanded shape. We would supply to this dimension or greater.

Max = Recovered dimensions after heating.

The recommended usage range for the part is from 10% less than minimum expanded inside diameter to 10% greater than the maximum recovered inside diameter.

For more information please search by Part Number on: **www.te.com/adm** or contact our TE sales representatives.

Materials:
*As Supplied/Expanded dimensions may be slightly reduced due to the nature of the material.
After recovery sizes are not affected.

Micro Molded Shapes (Continued)

Selection Guide

As Supplied (a)

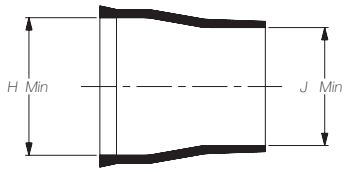

After Recovery (b)

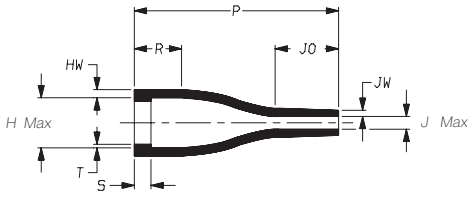

Dimensions in millimeters (in inches, for reference)

	As Supplied		After Recovery								
Part Number	H Min. a	J Min. a	H Max. b	J Max. b	P ±10% b	R ±10% b	S ±10% b	T ±10% b	JO ±10% b	HW ±20% b	JW ±20% b
204W201	10 [.39]	9.0 [.35]	5.2 [.20]	1.5 [.06]	20 [.79]	4.0 [.16]	0.8 [.03]	0.35 [.01]	6.6 [.26]	0.8 [.03]	0.6 [.02]

As Supplied (a)

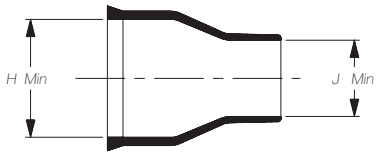

After Recovery (b)

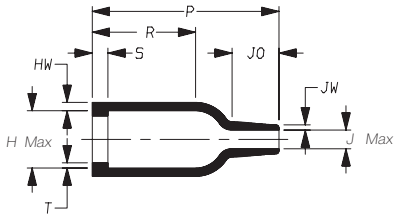

Dimensions in millimeters (in inches, for reference)

	As Supplied		After Recovery								
Part Number	H Min. a	J Min. a	H Max. b	J Max. b	P ±10% b	R ±10% b	S ±10% b	T ±10% b	JO ±10% b	HW ±20% b	JW ±20% b
203W301-*-G02	10 [.39]	6.0 [.24]	5.8 [.23]	2.2 [.09]	19 [.75]	11 [.43]	1.5 [.06]	0.5 [.02]	4.5 [.18]	0.8 [.03]	0.5 [.02]

As Supplied (a)

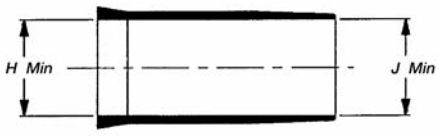

After Recovery (b)

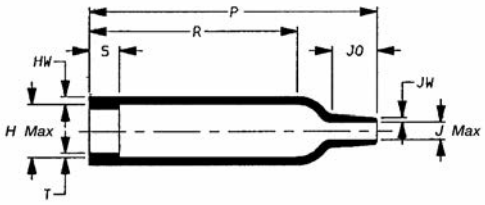

Dimensions in millimeters (in inches, for reference)

	As Supplied		After Recovery								
Part Number	H Min. a	J Min. a	H Max. b	J Max. b	P ±10% b	R ±10% b	S ±10% b	T ±10% b	JO ±10% b	HW ±20% b	JW ±20% b
203W301	10 [.39]	10 [.39]	5.8 [.23]	2.2 [.09]	29 [1.14]	21 [.83]	3.0 [.12]	0.5 [.02]	4.5 [.18]	0.8 [.03]	0.5 [.02]

Dimensions are shown for reference purposes only. Specifications subject to change.

Dimensions are in millimeters unless otherwise specified.

USA: +1 800 522 6752
Asia Pacific: +86 0 400 820 6015
UK: +44 800 267 666

For additional support numbers please visit www.te.com

Micro Molded Shapes (Continued)

Selection Guide

As Supplied (a)

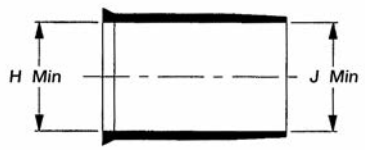

After Recovery (b)

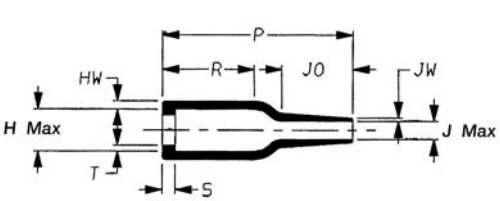

Dimensions in millimeters (in inches, for reference)

	As Supplied		After Recovery								
Part Number	H Min. a	J Min. a	H Max. b	J Max. b	P ±10% b	R ±10% b	S ±10% b	T ±10% b	JO ±10% b	HW ±20% b	JW ±20% b
202K111-*-01	17 [.67]	17 [.67]	6.9 [.27]	3.0 [.12]	29 [1.14]	14 [.55]	1.7 [.07]	0.9 [.04]	10.8 [.43]	1.3 [.05]	0.7 [.03]

As Supplied (a)

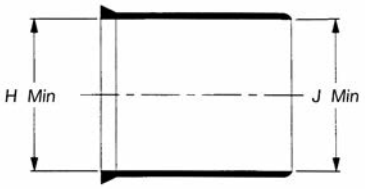

After Recovery (b)

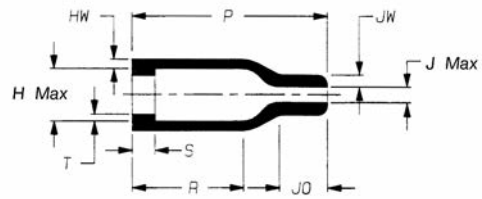

Dimensions in millimeters (in inches, for reference)

	As Supplied		After Recovery								
Part Number	H Min. a	J Min. a	H Max. b	J Max. b	P ±10% b	R ±10% b	S ±10% b	T ±10% b	JO ±10% b	JW ±20% b	HW ±20% b
202A111-*-G07	17 [.67]	17 [.67]	7.9 [.31]	2.2 [.09]	25 [.98]	14 [.55]	3.0 [.12]	1.0 [.04]	6.0 [.24]	1.7 [.07]	1.0 [.04]

As Supplied (a)

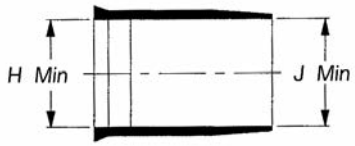

After Recovery (b)

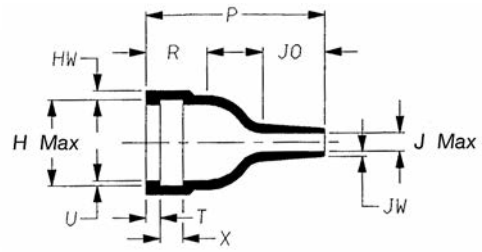

Dimensions in millimeters (in inches, for reference)

	As Supplied		After Recovery									
Part Number	H Min. a	J Min. a	H Max. b	J Max. b	P ±10% b	R ±10% b	T ±10% b	U ±10% b	X ±10% b	JO ±10% b	HW ±20% b	JW ±20% b
204W221	11 [.43]	11 [.43]	9.3 [.37]	2.1 [.08]	19 [.75]	6.5 [.26]	1.5 [.06]	0.55 [.02]	2.4 [.09]	6.6 [.26]	1.1 [.04]	0.5 [.02]

Dimensions are shown for reference purposes only. Specifications subject to change.

Dimensions are in millimeters unless otherwise specified.

USA: +1 800 522 6752
Asia Pacific: +86 0 400 820 6015
UK: +44 800 267 666

For additional support numbers please visit www.te.com

Micro Molded Shapes (Continued)

Selection Guide

As Supplied (a)

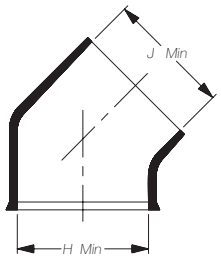

After Recovery (b)

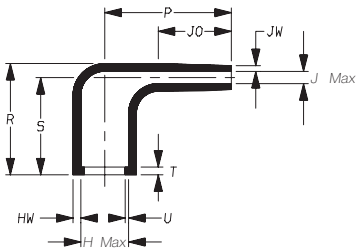

Dimensions in millimeters (in inches, for reference)

	As Supplied		After Recovery									
Part Number	H Min. a	J Min. a	H Max. b	J Max. b	P ±10% b	R ±10% b	S ±10% b	T ±10% b	U ±10% b	JO ±10% b	HW ±20% b	JW ±20% b
224W201	11 [.43]	9.0 [.35]	5.2 [.20]	1.6 [.06]	13 [.51]	11.5 [.45]	10 [.39]	0.8 [.03]	0.35 [.01]	7.5 [.30]	0.8 [.03]	0.6 [.02]

As Supplied (a)

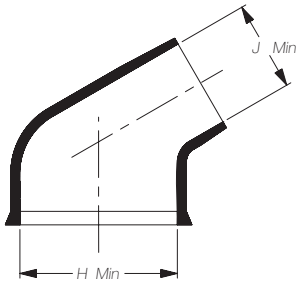

After Recovery (b)

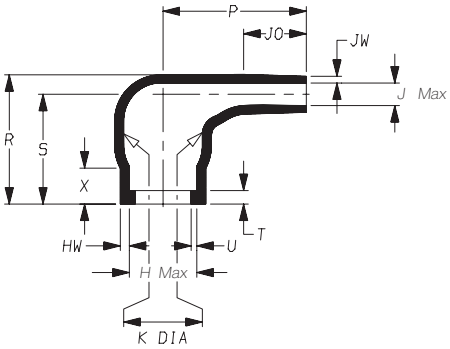

Dimensions in millimeters (in inches, for reference)

	As Supplied		After Recovery													
Part Number	H Min. a	J Min. a	H Max. b	J Max. b	K Min. b	K Max. b	P ±10% b	R ±10% b	S ±10% b	T ±10% b	U ±10% b	JO ±10% b	HW ±20% b	JW ±20% b	X ±20% b
223W601	10 [.39]	6.0 [.24]	6.3 [.25]	2.0 [.08]	10 [.39]	7.4 [.29]	12.5 [.49]	11.5 [.45]	9.8 [.39]	1.2 [.05]	0.5 [.02]	6.0 [.24]	1.0 [.04]	0.6 [.02]	3.2 [.13]

As Supplied (a)

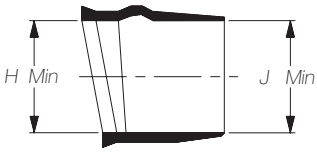

After Recovery (b)

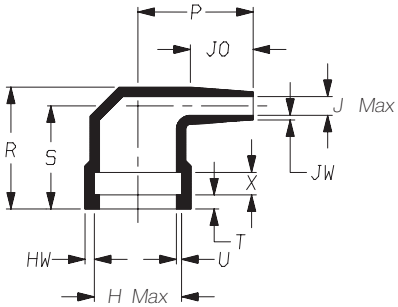

Dimensions in millimeters (in inches, for reference)

	As Supplied		After Recovery										
Part Number	H Min. a	J Min. a	H Max. b	J Max. b	P ±10% b	R ±10% b	S ±10% b	T ±10% b	U ±10% b	X ±10% b	JO ±10% b	HW ±20% b	JW ±20% b
224W221	11 [.43]	11 [.43]	9.3 [.37]	2.1 [.08]	12.3 [.48]	13 [.51]	11 [.43]	1.5 [.06]	0.55 [.02]	2.4 [.09]	6.6 [.26]	1.0 [.04]	0.5 [.02]

Catalog 1654025
Revised 3-13

www.te.com

Dimensions are shown for reference purposes only. Specifications subject to change.

Dimensions are in millimeters unless otherwise specified.

USA: +1 800 522 6752
Asia Pacific: +86 0 400 820 6015
UK: +44 800 267 666

For additional support numbers please visit www.te.com

207W213 to 256

Two-Part Feedthrough

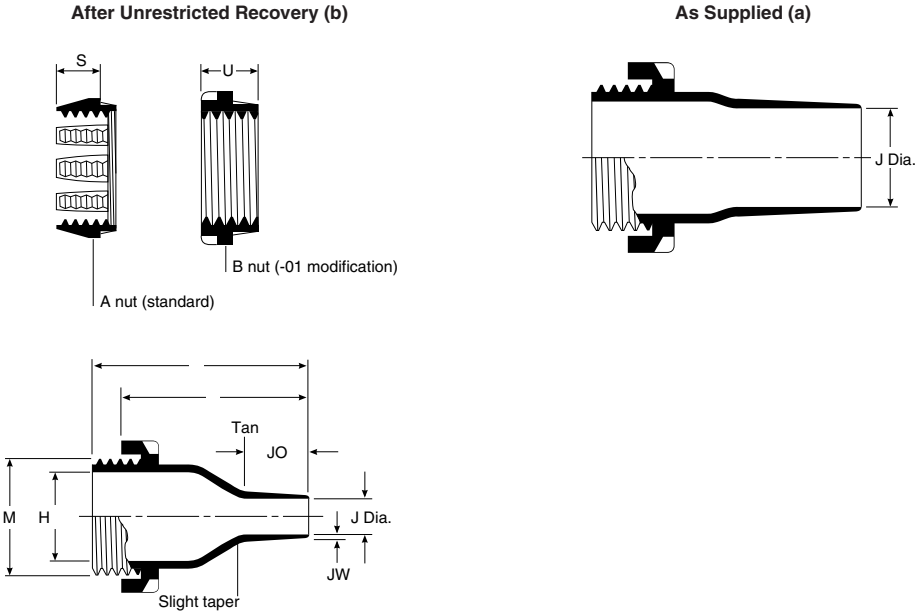

Applications

Use for strain relief and abrasion protection when cables pass through equipment boxes or panels.

Materials Available

Material Dash Number	Material Description	Precoating No.	Adhesive Part No.
-3	Semirigid polyolefin	/42 or /86	S-1017 or S-1048
-4	Flexible polyolefin	/42 or /86	S-1017 or S-1048
-12	Fluoroelastomer	N/A	S-1255-04
-25	Fluid-resistant elastomer	/42 or /86 or /225	S-1017 or S-1048 or S-1125
-100	Polyolefin, Zerohal	/86 or /180	S-1048 or S-1030

*For more information, please see the appropriate material page in this section.

**For more information, please see section 5.

Product Dimensions

Part No.	H Ref. b	J Min. -3, -4, -12, -25 a	J Min. -100 a	J Max. b	JO Max. b	M Thread b	P ±10% b	R ±10% b	S ±10% b	U ±10% b	JW ±20% b	Hole Dia. ±.51 (.02]
207W213	11.9 [.47]	9.9 [.39]	8.5 [.33]	4.1 [.16]	15.2 [.60]	20.1 [.79]	62.0 [2.44]	49.0 [1.93]	13.0 [.51]	9.9 [.39]	1.3 [.05]	23.9 [.94]
207W223	20.1 [.79]	18.0 [.71]	16.5 [.65]	7.1 [.28]	19.3 [.76]	30.0 [1.18]	71.9 [2.83]	58.9 [2.32]	16.0 [.63]	9.9 [.39]	1.8 [.07]	34.0 [1.34]
207W234	30.1 [1.22]	27.9 [1.10]	26.5 [1.04]	11.9 [.47]	26.9 [1.06]	41.9 [1.65]	87.1 [3.43]	73.9 [2.91]	18.0 [.71]	9.9 [.39]	2.03 [.08]	47.0 [1.85]
207W245	45.0 [1.77]	41.9 [1.65]	40.5 [1.59]	18.0 [.71]	32.0 [1.26]	55.9 [2.20]	102.1 [4.02]	88.9 [3.50]	18.0 [.71]	9.9 [.39]	3.05 [.12]	60.5 [2.38]
207W256	68.1 [2.68]	64.0 [2.52]	64.5 [2.54]	30.0 [1.18]	39.1 [1.54]	80.0 [3.15]	121.9 [4.80]	109.0 [4.29]	18.0 [.71]	9.9 [.39]	3.05 [.12]	85.1 [3.35]

Note: Coating is optional. As supplied dimensions appearing in table are for uncoated parts. When coating is added, entry diameters will be reduced by 1.5 [.06] max.

Dimensions are shown for reference purposes only. Specifications subject to change.

Dimensions are in millimeters unless otherwise specified.

USA: +1 800 522 6752
Asia Pacific: +86 0 400 820 6015
UK: +44 800 267 666

For additional support numbers please visit www.te.com

CES

Heat-Shrinkable Cable Entry Seals

Product Facts

- Comes in many sizes and configurations
- Seals multicable openings
- SAE-AS81765/1 Type 1

Applications

Tyco Electronics Heat-Shrinkable Cable-Entry Seals (CESs) provide a watertight, fume-tight seal where cables enter connection boxes, bulkheads, or other enclosures.

CESs are available in two basic types: standard and threaded. The standard CES for thin-wall enclosures consists of a three-part assembly — a rigid plastic nylon nut, an O-ring, and a heat-shrinkable molded area. The CES for threaded-hole applications is a one-part assembly that combines a tapered national pipe thread (NPT) in rigid plastic nylon with a heat-shrinkable molded area.

All CESs are available with the molded area configured with one opening for a single wire or cable entry or with two, three, or four legs of equal size to seal multiple wires or cables at the entry to enclosures and/or bulkheads. To meet sealing requirements, all CESs have factory-applied adhesive that provides the seal to wire and cable jackets. When armored cable is being sealed it may be necessary to use additional sealants, such as G.E. RTV 112 or Dow Corning RTV 732, to form the water seal.

Standard Cable Entry Seal Installation Instructions

Cable entry seal number	Torque in-pounds	Torque Nm
1	15-20	1.7-2.3
2	15-20	1.7-2.3
3	20-25	2.3-2.8
4	40-45	4.5-5.1
5	45-50	5.1-5.7

Step 1
Place rigid, externally threaded nut through hole so flanged end is on the inside of the can or cabinet.

Step 2
Place O-ring over threaded end and position against outside of can or cabinet.

Step 3
Screw shrinkable, internally threaded component onto the rigid nut and tighten, using appropriate spanner wrenches, until O-ring is slightly flattened — or use the torque values shown in the table to the left.

Step 4
Insert cable through expanded opening and make necessary connections (see note following Step 4 in the next section).

Step 5
Shrink expanded nose by applying 121°C-135°C [250°F-275°F] of heat from a heat gun with circular reflector, or a gas torch, or other heat source.* When part has shrunk to the cable, and when the sealant is seen to flow, discontinue heat. Additional heating *will not* make the component shrink tighter.

*Follow the safety precautions of the manufacturer of the heater.

Threaded Cable Entry Seal Installation Instructions

Note: Surfaces to be sealed should be clean and free of burrs, pits, or deep scratches.

Step 1
Apply a thread sealant to the threaded end and then screw threaded cable entry seal into pre-tapped hole or pipe fitting.

Step 2
Tighten by applying wrench to hexagonal nut.

Step 3
Insert cable through expanded opening and make necessary connection (see Note).

Step 4
Shrink expanded nose by applying 121°C-135°C [250°F-275°F] of heat from a heat gun with circular reflector, gas torch, or other heat source.* When part has shrunk to the cable, and when the sealant is seen to flow, discontinue heat. Additional heating *will not* make the component shrink tighter.

Note
If armored cable is used, the factory-applied sealant will not fill the interstices of the armor. The armor must be cut back so that the part is allowed to shrink and seal to the cable sheath as well as come down over the armor. To keep the armor from unraveling, some armor must be approximately 1/4 inch to 3/8 inch [.01 to .02 mm] inside the cable entry seal leg.

*Follow the safety precautions of the manufacturer of the heater.

Catalog 1654025
Revised 3-13

www.te.com

Dimensions are shown for reference purposes only. Specifications subject to change.

Dimensions are in millimeters unless otherwise specified.

USA: +1 800 522 6752
Asia Pacific: +86 0 400 820 6015
UK: +44 800 267 666

For additional support numbers please visit www.te.com

CES (Continued)

Standard CES
Dimensions are mm [inches]

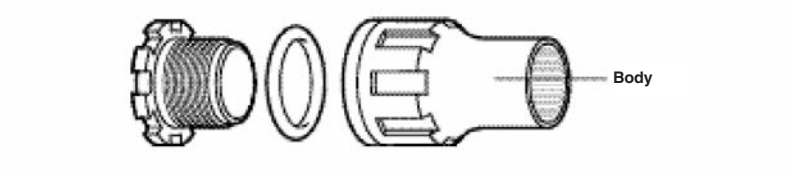

Product Dimensions

Part No.	No. of Legs	Overall Nom. Recommended Length	Min. Expanded I.D. Body	Max. Recovered I.D. Body	Max. I.D. of Part	Drill Size	Max. O.D. of Nut
CES-1	1	69.85 [2.75]	12.70 [0.50]	4.32 [0.17]	19.05 [0.75]	25.40 [1.00]	35.81 [1.410]
CES-2	1	69.85 [2.75]	19.05 [0.75]	6.35 [0.25]	19.05 [0.75]	25.40 [1.00]	35.81 [1.410]
CES-3	1	95.25 [3.75]	28.45 [1.12]	12.70 [0.50]	27.94 [1.10]	35.05 [1.38]	48.31 [1.902]
CES-4	1	114.30 [4.50]	40.64 [1.60]	19.05 [0.75]	39.62 [1.56]	50.80 [2.00]	69.09 [2.720]
CES-4S*	1	114.30 [4.50]	50.80 [2.00]	19.05 [0.75]	53.34 [2.10]	59.94 [2.36]	85.09 [3.350]
CES-5	1	177.80 [7.00]	69.85 [2.75]	36.32 [1.43]	73.66 [2.90]	88.90 [3.50]	103.38 [4.070]

*Part configuration may be different than depicted in figure. Contact TE for specification.
Also available in threaded version.

Breakout CES
Dimensions are mm [inches]

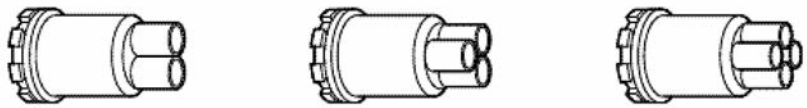

Product Dimensions

Part No.	No. of Legs	Overall Nom. Recommended Length	Min. Expanded I.D. (Each Leg)	Max. Recovered I.D. (Each Leg)	Max. I.D. of Part	Drill Size	Max. O.D. of Nut
CES-2-D1A	2	69.85 [2.75]	15.24 [0.60]	2.79 [0.11]	19.05 [0.75]	25.40 [1.00]	35.81 [1.41]
CES-2-T1	3	69.85 [2.75]	10.16 [0.40]	2.79 [0.11]	19.05 [0.75]	25.40 [1.00]	35.81 [1.41]
CES-2-T1B	3	88.90 [3.50]	15.24 [0.60]	4.32 [0.17]	19.05 [0.75]	25.40 [1.00]	35.81 [1.41]
CES-2-F1A	4	69.85 [2.75]	10.16 [0.40]	2.79 [0.11]	19.05 [0.75]	25.40 [1.00]	35.81 [1.41]
CES-2-F1	4	88.90 [3.50]	15.24 [0.60]	4.32 [0.17]	19.05 [0.75]	25.40 [1.00]	35.81 [1.41]
CES-3-D1	2	88.90 [3.50]	15.24 [0.60]	4.32 [0.17]	27.94 [1.10]	35.05 [1.38]	48.26 [1.90]
CES-3-T1	3	88.90 [3.50]	15.24 [0.60]	4.32 [0.17]	27.94 [1.10]	35.05 [1.38]	48.26 [1.90]
CES-3-F1	4	88.90 [3.50]	15.24 [0.60]	4.32 [0.17]	27.94 [1.10]	35.05 [1.38]	48.26 [1.90]
CES-4-D3	2	101.60 [4.00]	22.86 [0.90]	7.62 [0.30]	40.64 [1.60]	50.80 [2.00]	69.09 [2.72]
CES-4-T1	3	101.60 [4.00]	22.86 [0.90]	7.62 [0.30]	40.64 [1.60]	50.80 [2.00]	69.09 [2.72]
CES-4-F1	4	101.60 [4.00]	22.86 [0.90]	7.62 [0.30]	40.64 [1.60]	50.80 [2.00]	69.09 [2.72]
CES-5-T4	3	127.00 [5.00]	31.75 [1.25]	12.70 [0.50]	73.66 [2.90]	63.50 [2.50]	103.38 [4.07]
CES-5-F4	4	127.00 [5.00]	31.75 [1.25]	12.70 [0.50]	73.66 [2.90]	63.50 [2.50]	103.38 [4.07]

Right-Angle Breakout CES
Dimensions are mm [inches]

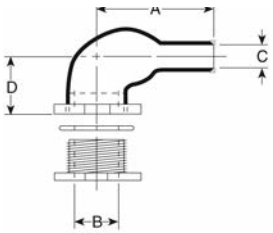

Part No.	C		B	Length		Drill Size
	Min. Exp. ID	Max. Rec. ID	ID Min	D	A	
CES-1R	12.70 [0.50]	7.11 [0.28]	12.70 [0.50]	35.56 [1.4]	42.67 [1.68]	25.40 [1.00]
CES-2R	18.03 [0.71]	8.38 [0.33]	19.05 [0.75]	43.18 [1.7]	44.96 [1.77]	25.40 [1.00]
CES-3R	27.94 [1.10]	9.65 [0.38]	27.94 [1.10]	53.34 [2.1]	58.42 [2.30]	34.80 [1.37]
CES-4R	40.64 [1.60]	15.75 [0.62]	40.64 [1.60]	78.74 [3.1]	71.12 [2.80]	50.80 [2.00]

Dimensions are shown for reference purposes only. Specifications subject to change.

Dimensions are in millimeters unless otherwise specified.

USA: +1 800 522 6752
Asia Pacific: +86 0 400 820 6015
UK: +44 800 267 666

For additional support numbers please visit www.te.com

CES (Continued)

Threaded CES

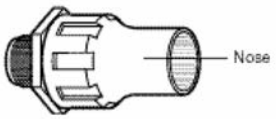

Part No.	Overall Nom. Recommended Length	Min. Expanded I.D. Nose	Max. Recovered I.D. Nose	National Adapter I.D.	Pipe Thread Size
CES-2-A50	83.82 [3.30]	19.05 [0.75]	6.35 [0.25]	12.70 [0.50]	1/2–14
CES-2-A75	83.82 [3.30]	19.05 [0.75]	6.35 [0.25]	19.05 [0.75]	3/4–14
CES-2-A100	83.82 [3.30]	19.05 [0.75]	6.35 [0.25]	19.05 [0.75]	1–11 1/2
CES-3-A100	111.00 [4.37]	28.45 [1.12]	12.70 [0.50]	25.40 [1.00]	1–11 1/2
CES-3-A150	117.35 [4.62]	28.45 [1.12]	12.70 [0.50]	27.94 [1.10]	1 1/2–11 1/2
CES-4-A150*	127.00 [5.00]	50.80 [2.00]	19.05 [0.75]	35.56 [1.40]	1 1/2–11 1/2
CES-5-A250*	152.40 [6.00]	69.85 [2.75]	25.40 [1.00]	60.96 [2.40]	2 1/2–10

* Not illustrated - refer to Specification Control Drawing for details.

Threaded Breakout CES

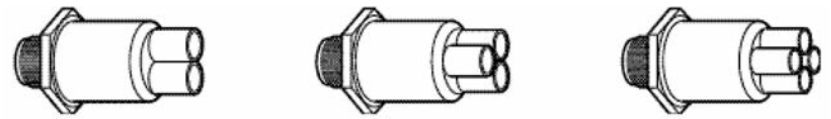

Product Dimensions

Part No.	No. of Legs	Overall Nom. Recommended Length	Min. Expanded I.D. (Each Leg)	Max. Recovered I.D. (Each Leg)	Max. I.D. of Part	Pipe Thread Size (NPT)
CES-2A-T1	3	95.25 [3.75]	10.16 [0.4]	2.79 [0.11]	12.70 [0.50]	1/2–14
CES-2A-F1	4	95.25 [3.75]	10.16 [0.4]	2.79 [0.11]	12.70 [0.50]	1/2–14
CES-2A-D1	2	95.25 [3.75]	15.24 [0.6]	2.79 [0.11]	19.05 [0.75]	3/4–14
CES-2A-T2	3	95.25 [3.75]	10.16 [0.4]	2.79 [0.11]	19.05 [0.75]	3/4–14
CES-2A-F2	4	95.25 [3.75]	10.16 [0.4]	2.79 [0.11]	19.05 [0.75]	3/4–14
CES-3A-D1	2	95.25 [3.75]	15.24 [0.6]	4.32 [0.17]	25.40 [1.00]	1–11 1/2
CES-2A-T3	3	95.25 [3.75]	15.24 [0.6]	4.32 [0.17]	25.40 [1.00]	1–11 1/2
CES-3A-F1	4	95.25 [3.75]	15.24 [0.6]	4.32 [0.17]	25.40 [1.00]	1–11 1/2
CES-3A-D2	2	95.25 [3.75]	15.24 [0.6]	4.32 [0.17]	27.94 [1.10]	1 1/2–11 1/2
CES-3A-T2	3	95.25 [3.75]	15.24 [0.6]	4.32 [0.17]	27.94 [1.10]	1 1/2–11 1/2
CES-3A-F2	4	95.25 [3.75]	15.24 [0.6]	4.32 [0.17]	27.94 [1.10]	1 1/2–11 1/2
CES-4A-D3	2	95.25 [3.75]	22.86 [0.9]	7.62 [0.30]	37.34 [1.47]	1 1/2–11 1/2
CES-4A-T3	3	95.25 [3.75]	22.86 [0.9]	7.62 [0.30]	37.34 [1.47]	1 1/2–11 1/2
CES-4A-F3	4	95.25 [3.75]	22.86 [0.9]	7.62 [0.30]	37.34 [1.47]	1 1/2–11 1/2

Note: Coating is optional. As supplied dimensions appearing in table are for uncoated parts. When coating is added, entry diameters will be reduced by 1.5 [.06] max.

Dimensions are shown for reference purposes only. Specifications subject to change.

Dimensions are in millimeters unless otherwise specified.

USA: +1 800 522 6752
Asia Pacific: +86 0 400 820 6015
UK: +44 800 267 666

For additional support numbers please visit www.te.com

CES (Continued)

Right-Angle Threaded CES

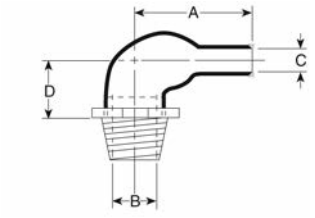

Part No.	C		B	Length		NPT Size
	Min. Exp. ID	Max. Rec. ID	ID Min	A	D	
CES-2R-A50	12.70 [0.50]	7.11 [0.28]	12.70 [0.50]	35.56 [1.4]	25.40 [1.00]	1/2-14
CES-2R-A75	18.03 [0.71]	8.38 [0.33]	19.05 [0.75]	43.18 [1.7]	27.94 [1.10]	3/4-14
CES-3R-A100	27.94 [1.10]	9.65 [0.38]	25.40 [1.00]	53.34 [2.1]	33.78 [1.33]	1-11 1/2
CES-3R-A150	40.64 [1.60]	15.75 [0.62]	27.94 [1.10]	78.74 [3.1]	39.62 [1.56]	1 1/2-11 1/2

Dimensions are shown for reference purposes only. Specifications subject to change.

Dimensions are in millimeters unless otherwise specified.

USA: +1 800 522 6752
Asia Pacific: +86 0 400 820 6015
UK: +44 800 267 666

For additional support numbers please visit www.te.com

301A011 to 048

T Transition

As Supplied (a)

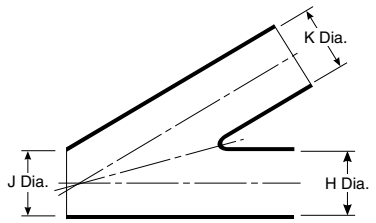

After Unrestricted Recovery (b)

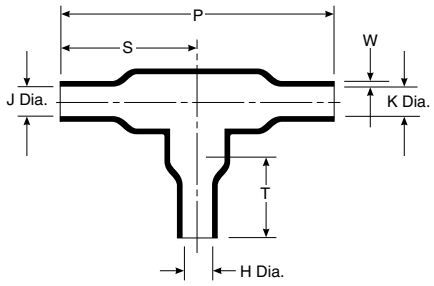

Applications

Provides strain relief and mechanical protection on cable harness assemblies.

Materials Available

Material Dash Number	Material Description	Precoating No.	Adhesive Part No.
-3	Semirigid polyolefin	/42 or /86	S-1017 or S-1048
-4	Flexible polyolefin	/42 or /86	S-1017 or S-1048
-12	Fluoroelastomer	N/A	S-1255-04
-25	Fluid-resistant elastomer	/42 or /86 or /225	S-1017 or S-1048 or S-1125
-100	Polyolefin, Zerohal	/86, /180	S-1048 or S-1030

*For more information, please see the appropriate material page in this section.
**For more information, please see section 5.

Product Dimensions

Part No.	H, J & K Min. a	H, J & K Max. b	P ±10% b	S ±10% b	T ±10% b	W ±30% b
301A011	6.6 [.26]	3.6 [.14]	29.7 [1.17]	15.1 [.59]	—	1.02 [.04]
301A022	13.2 [.52]	6.9 [.27]	58.7 [2.31]	29.5 [1.16]	17.5 [.69]	1.52 [.06]
301A028	20.0 [0.79]	10.2 [.40]	90 [3.54]	45 [1.77]	30 [1.18]	2.0 [.08]
301A034	26.9 [1.06]	13.5 [.53]	120.1 [4.73]	60.2 [2.37]	35.6 [1.40]	2.29 [.09]
301A048	55.6 [2.19]	30.2 [1.19]	246.4 [9.70]	123.2 [4.85]	70.9 [2.79]	3.05 [.12]

Note: Coating is optional. As supplied dimensions appearing in table are for uncoated parts. When coating is added, entry diameters will be reduced by 1.5 [.06] max.

Catalog 1654025
Revised 3-13

www.te.com

Dimensions are shown for reference purposes only. Specifications subject to change.

Dimensions are in millimeters unless otherwise specified.

USA: +1 800 522 6752
Asia Pacific: +86 0 400 820 6015
UK: +44 800 267 666

For additional support numbers please visit www.te.com

301A511 to 514

Slimline T Transition

As Supplied (a)

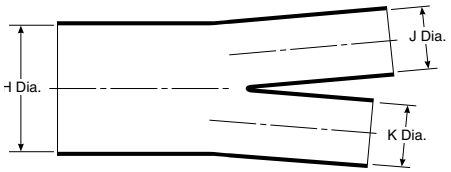

After Unrestricted Recovery (b)

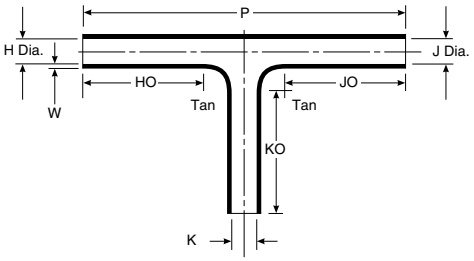

Applications

Provides strain relief and mechanical protection on cable harness assemblies.

Materials Available

Material Dash Number	Material Description	Precoating No.	Adhesive Part No.
-50	Fluoroelastomer polymer blend	N/A	S-1125
-51	Elastomer polymer blend	/164	S-1124
-71	Flexible polyolefin	/42 or /86	S-1017 or S-1048
-125	Fluoropolymer	N/A	S-1255-04

*For more information, please see the appropriate material page in this section.
**For more information, please see section 5.

Product Dimensions

Part No.	H		J & K		HO, JO, & KO ±10% b	W Nom. b	P Nom. b
	Min. a	Max. b	Min. a	Max. b			
301A511	19.8 [.78]	6.6 [.26]	13.2 [.52]	6.6 [.26]	25.4 [1.00]	1.02 [.04]	80.8 [3.18]
301A512	34.3 [1.35]	11.4 [.45]	22.9 [.90]	11.4 [.45]	41.1 [1.62]	1.27 [.05]	120.4 [4.74]
301A513	60.2 [2.37]	20.1 [.79]	40.1 [1.58]	20.1 [.79]	63.5 [2.50]	1.52 [.06]	175.8 [6.92]
301A514*	83.3 [3.28]	33.3 [1.31]	54.9 [2.16]	33.3 [1.31]	88.9 [3.50]	1.78 [.07]	242.3 [9.54]

Note: Coating is optional. As supplied dimensions appearing in table are for uncoated parts. When coating is added, entry diameters will be reduced by 1.5 [.06] max.
*301A514 is not available in -125 Fluoropolymer material.

Dimensions are shown for reference purposes only. Specifications subject to change.

Dimensions are in millimeters unless otherwise specified.

USA: +1 800 522 6752
Asia Pacific: +86 0 400 820 6015
UK: +44 800 267 666

For additional support numbers please visit www.te.com

322A112 to 158

T Transition

As Supplied (a)

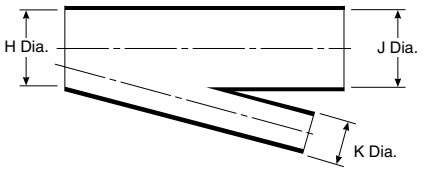

After Unrestricted Recovery (b)

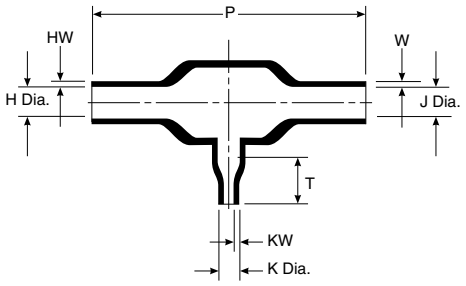

Applications

Provides strain relief and mechanical protection on cable harness assemblies.

Materials Available

Material Dash Number	Material Description	Precoating No.	Adhesive Part No.
-3	Semirigid polyolefin	/42 or /86	S-1017 or S-1048
-4	Flexible polyolefin	/42 or /86	S-1017 or S-1048
-12	Fluoroelastomer	N/A	S-1255-04
-25	Modified elastomer	/42 or /86 or /225	S-1017 or S-1048 or S-1125
-100	Polyolefin, Zerohal	/86 or /180	S-1048 or S-1030

*For more information, please see the appropriate material page in this section.
**For more information, please see section 5.

Product Dimensions

Part No.	H & J		K		P	T	HW & W	KW
	Min. a	Max. b	Min. a	Max. b	±10% b	±10% b	±20% b	±20% b
322A112	13.2 [.52]	5.8 [.23]	6.6 [.26]	3.0 [.12]	52.3 [2.06]	—	1.52 [.06]	1.02 [.04]
322A123	26.9 [1.06]	12.4 [.49]	6.6 [.26]	3.0 [.12]	83.3 [3.28]	10.7 [.42]	2.54 [.10]	1.02 [.04]
322A134	26.9 [1.06]	12.7 [.50]	13.2 [.52]	5.8 [.23]	107.7 [4.24]	20.3 [.80]	2.54 [.10]	1.52 [.06]
322A148	55.6 [2.19]	25.4 [1.00]	13.2 [.52]	5.8 [.23]	180.6 [7.11]	25.4 [1.00]	4.57 [.18]	1.52 [.06]
322A158	55.6 [2.19]	25.4 [1.00]	26.9 [1.06]	12.4 [.49]	222.3 [8.75]	38.1 [1.50]	4.57 [.18]	2.54 [.10]

Note: Coating is optional. As supplied dimensions appearing in table are for uncoated parts. When coating is added, entry diameters will be reduced by 1.5 [.06] max.

Catalog 1654025
Revised 3-13

www.te.com

Dimensions are shown for reference purposes only. Specifications subject to change.

Dimensions are in millimeters unless otherwise specified.

USA: +1 800 522 6752
Asia Pacific: +86 0 400 820 6015
UK: +44 800 267 666

For additional support numbers please visit www.te.com

342A012 to 058

45° Side-Breakout Transition

As Supplied (a)

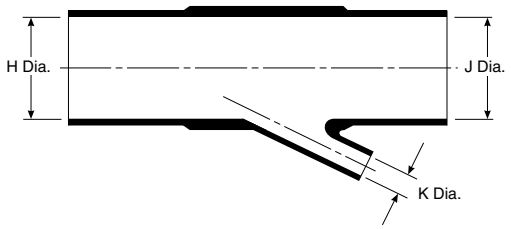

After Unrestricted Recovery (b)

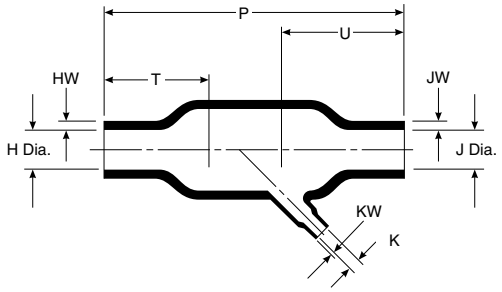

Applications

Provides strain relief and mechanical protection on cable harness assemblies.

Materials Available

Material*	Material Description	Precoating No.	Adhesive Part No.**
-3	Semirigid polyolefin	/42 or /86	S-1017 or S-1048
-4	Flexible polyolefin	/42 or /86	S-1017 or S-1048
-12	Fluoroelastomer	N/A	S-1255-04
-25	Fluid-resistant elastomer	/42 or /86 or /225	S-1017 or S-1048 or S-1125
-100	Polyolefin, Zerohal	/86 or /180	S-1048 or S-1030

*For more information, please see the appropriate material page in this section.
**For more information, please see section 5.

Product Dimensions

Part No.	H & J		K		P ±10% b	T* ±10% b	U* ±10% b	HW & JW ±20% b	KW ±20% b
	Min. a	Max. b	Min. a	Max. b					
342A012	13.2 [.52]	6.9 [.27]	6.6 [.26]	3.6 [.14]	49.3 [1.94]	19.6 [.77]	19.6 [.77]	1.52 [.06]	1.02 [.04]
342A024	26.9 [1.06]	12.7 [.50]	6.6 [.26]	3.6 [.14]	92.5 [3.64]	31.8 [1.25]	39.6 [1.56]	2.54 [.10]	1.02 [.04]
342A034	26.9 [1.06]	13.7 [.54]	13.2 [.52]	6.1 [.24]	144.8 [5.70]	50.8 [2.00]	50.8 [2.00]	2.54 [.10]	1.52 [.06]
342A048	55.6 [2.19]	26.9 [1.06]	13.2 [.52]	6.9 [.27]	184.9 [7.28]	63.5 [2.50]	63.5 [2.50]	4.57 [.18]	1.52 [.06]
342A058	55.6 [2.19]	26.9 [1.06]	26.9 [1.06]	13.7 [.54]	203.5 [8.01]	66.0 [2.60]	66.0 [2.60]	4.57 [.18]	2.54 [.10]

Note: Coating is optional. As supplied dimensions appearing in table are for uncoated parts. When coating is added, entry diameters will be reduced by 1.5 [.06] max.
* T = vent port location, U = injection port location

Dimensions are shown for reference purposes only. Specifications subject to change.

Dimensions are in millimeters unless otherwise specified.

USA: +1 800 522 6752
Asia Pacific: +86 0 400 820 6015
UK: +44 800 267 666

For additional support numbers please visit www.te.com

362A014 to 114

30° Side-Breakout Transition

As Supplied (a)

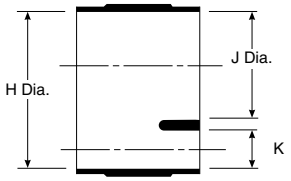

After Unrestricted Recovery (b)

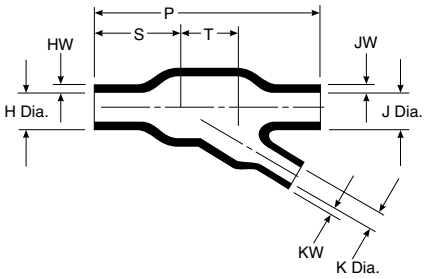

Applications

Provides strain relief and mechanical protection on cable harness assemblies.

Materials Available

Material*	Material Description	Precoating No.	Adhesive Part No.**
-3	Semirigid polyolefin	/42 or /86	S-1017 or S-1048
-4	Flexible polyolefin	/42 or /86	S-1017 or S-1048
-12	Fluoroelastomer	N/A	S-1255-04
-25	Fluid-resistant elastomer	/42 or /86 or /225	S-1017 or S-1048 or S-1125
-100	Polyolefin, Zerohal	/86 or /180	S-1048 or S-1030

*For more information, please see the appropriate material page in this section.
**For more information, please see section 5.

Product Dimensions

Part No.	H & J		K		P	S	T	HW & JW	KW
	Min. a	Max. b	Min. a	Max. b	±10% b	±10% b	±10% b	±20% b	±20% b
362A014	30.5 [1.20]	15.7 [.62]	20.3 [.80]	10.7 [.42]	82.6 [3.25]	31.8 [1.25]	21.1 [.63]	2.54 [.10]	1.78 [.07]
362A024	35.6 [1.40]	18.3 [.72]	15.2 [.60]	8.6 [.34]	63.5 [2.50]	19.1 [.75]	22.4 [.88]	2.54 [.10]	1.52 [.06]
362A114	35.6 [1.40]	18.8 [.74]	10.2 [.40]	5.3 [.21]	61.0 [2.40]	19.1 [.75]	21.3 [.84]	2.79 [.11]	1.52 [.06]

Note: Coating is optional. As supplied dimensions appearing in table are for uncoated parts. When coating is added, entry diameters will be reduced by 1.5 [.06] max.
S = vent port, S + T = injection port

Catalog 1654025
Revised 3-13

www.te.com

Dimensions are shown for reference purposes only. Specifications subject to change.

Dimensions are in millimeters unless otherwise specified.

USA: +1 800 522 6752
Asia Pacific: +86 0 400 820 6015
UK: +44 800 267 666

For additional support numbers please visit www.te.com

381A301 to 304

Slimline Y Transition

As Supplied (a)

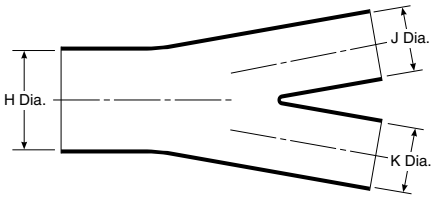

After Unrestricted Recovery (b)

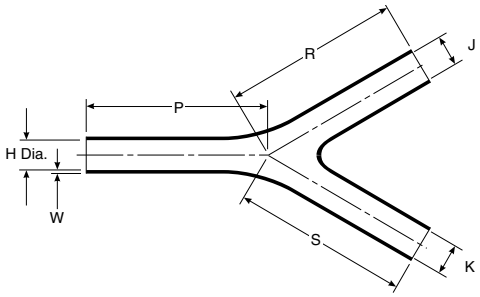

Applications

Provides strain relief and mechanical protection on cable harness assemblies.

Materials Available

Material*	Material Description	Precoating No.	Adhesive Part No.**
-50	Fluoroelastomer polymer blend	N/A	S-1125
-51	Elastomer polymer blend	/164	S-1124
-71	Flexible polyolefin	/42 or /86	S-1017 or S-1048
-125	Fluoropolymer	—	S-1255-04

*For more information, please see the appropriate material page in this section.
**For more information, please see section 5.

Product Dimensions

Part No.	H		J & K		W	P	R & S
	Min. a	Max. b	Min. a	Max. b	Nom. b	Nom. b	Nom. b
381A301	19.8 [.78]	6.6 [.26]	13.2 [.52]	6.6 [.26]	1.0 [.04]	40.6 [1.60]	40.6 [1.60]
381A302	34.3 [1.35]	11.4 [.45]	22.9 [.90]	11.4 [.45]	1.3 [.05]	63.0 [2.48]	63.0 [2.48]
381A303	60.2 [2.37]	20.1 [.79]	40.1 [1.58]	20.1[.79]	1.5 [.06]	94.7 [3.73]	94.7 [3.73]
381A304*	83.3 [3.28]	33.3 [1.31]	54.9 [2.16]	33.3 [1.31]	1.8 [.07]	133.9 [5.27]	133.9 [5.27]

Note: Coating is optional. As supplied dimensions appearing in table are for uncoated parts. When coating is added, entry diameters will be reduced by 1.5 [.06] max.
*381A304 is not available in -125 Fluoropolymer material.

Dimensions are shown for reference purposes only. Specifications subject to change.

Dimensions are in millimeters unless otherwise specified.

USA: +1 800 522 6752
Asia Pacific: +86 0 400 820 6015
UK: +44 800 267 666

For additional support numbers please visit www.te.com

382A012 to 046

Y Transition

As Supplied (a)

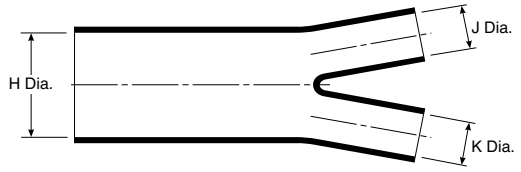

After Unrestricted Recovery (b)

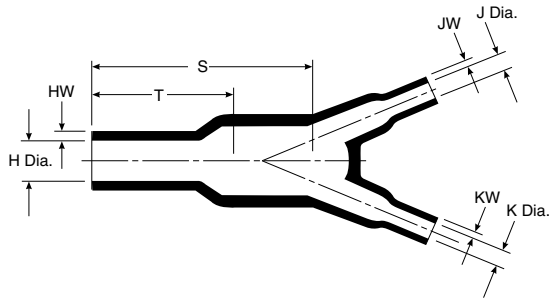

Applications

Provides strain relief and mechanical protection on cable harness assemblies.

Materials Available

Material*	Material Description	Precoating No.	Adhesive Part No.**
-3	Semirigid polyolefin	/42 or /86	S-1017 or S-1048
-4	Flexible polyolefin	/42 or /86	S-1017 or S-1048
-12	Fluoroelastomer	N/A	S-1255-04
-25	Fluid-resistant elastomer	/42 or /86 or /225	S-1017 or S-1048 or S-1125
-100	Polyolefin, Zerohal	/86 or /180	S-1048 or S-1030

*For more information, please see the appropriate material page in this section.
**For more information, please see section 5.

Product Dimensions

Part No.	H Min. a	H Max. b	J & K Min. a	J & K Max. b	S ±10% b	T ±10% b	HW ±20% b	JW & KW ±20% b
382A012	13.2 [.52]	6.1 [.24]	6.6 [.26]	3.3 [.13]	23.9 [.94]	15.5 [.61]	1.52 [.06]	1.02 [.04]
382A023	26.9 [1.06]	12.4 [.49]	13.2 [.52]	6.1 [.24]	53.3 [2.10]	33.0 [1.30]	2.54 [.10]	1.52 [.06]
382A034	38.6 [1.52]	18.0 [.71]	26.9 [1.06]	12.4 [.49]	78.7 [3.10]	55.9 [2.20]	3.05 [.12]	2.54 [.10]
382A046	55.6 [2.19]	25.9 [1.02]	26.9 [1.06]	12.7 [.50]	111.8 [4.40]	71.1 [2.80]	4.57 [.18]	2.54 [.10]

Note: Coating is optional. As supplied dimensions appearing in table are for uncoated parts. When coating is added, entry diameters will be reduced by 1.5 [.06] max.

Catalog 1654025
Revised 3-13

www.te.com

Dimensions are shown for reference purposes only. Specifications subject to change.

Dimensions are in millimeters unless otherwise specified.

USA: +1 800 522 6752
Asia Pacific: +86 0 400 820 6015
UK: +44 800 267 666

For additional support numbers please visit www.te.com

382C312, 322 and 332

Slimline Y Transition

As Supplied (a)

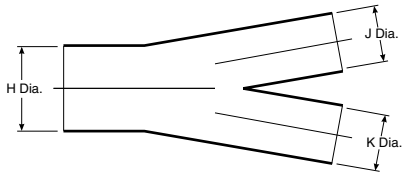

After Unrestricted Recovery (b)

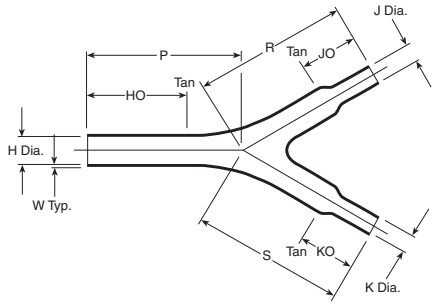

382C322, 382C332

After Unrestricted Recovery (b)

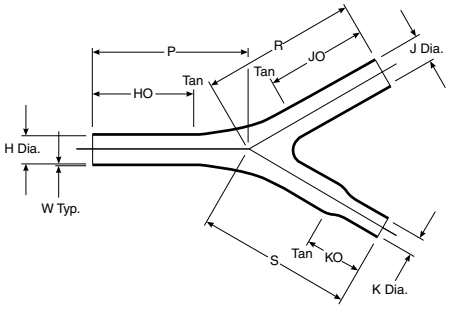

382C312

Applications

Provides strain relief and mechanical protection at two into one Y junctions in cable harness assemblies. When used with adhesive it provides environmental sealing. These parts are based on the 382A3 range. They have the branched outlet(s) reduced in size to accommodate smaller cable diameters without the need for packing or shimming.

Materials Available

Material	Material Description	Precoating No.	Adhesive Part No.
-50	Fluoroelastomer polymer blend	N/A	S-1125
-51	Elastomer polymer blend	/164	S-1124
-71	Flexible polyolefin	/42 or /86	S-1017 or S-1048
-125	Fluoropolymer	N/A	S-1255-04

Product Dimensions

Part No.	H		J		K		P, R & S	KO	HO & JO	W
	Min. a	Max. b	Min. a	Max. b	Min. a	Max. b	Nom. b	±15% b	±15% b	Nom b
382C312	1.20 [30.5]	.45 [11.4]	.90 [22.9]	.45 [11.4]	.60 [15.2]	.30 [7.6]	2.48 [63.0]	.85 [21.6]	1.62 [41.1]	.04 [1.0]

Part No.	H		J & K		P, R & S	HO	JO & KO	W
	Min. a	Max. b	Min. a	Max. b	Nom. b	±15% b	±15% b	Nom. b
382C322	.90 [22.9]	.45 [11.4]	.40 [10.2]	.20 [5.1]	2.48 [63.0]	1.62 [41.1]	.85 [21.6]	.04 [1.0]

Part No.	H		J & K		P, R & S	HO	JO & KO	W
	Min. a	Max. b	Min. a	Max. b	Nom. b	±15% b	±15% b	Nom. b
382C332	1.00 [25.4]	.45 [11.4]	.60 [15.2]	.30 [7.5]	2.48 [63.0]	1.62 [41.1]	.85 [21.6]	.04 [1.0]

Note: Coating is optional. As supplied dimensions appearing in table are for uncoated parts. When coating is added, entry diameters will be reduced by 1.5 [.06] max.

Dimensions are shown for reference purposes only. Specifications subject to change.

Dimensions are in millimeters unless otherwise specified.

USA: +1 800 522 6752
Asia Pacific: +86 0 400 820 6015
UK: +44 800 267 666

For additional support numbers please visit www.te.com

462A011 to 060

Transition, One to Three Cables

As Supplied (a)

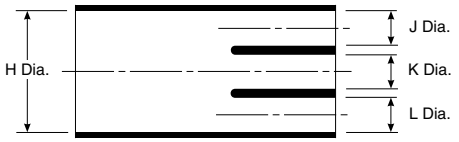

After Unrestricted Recovery (b)

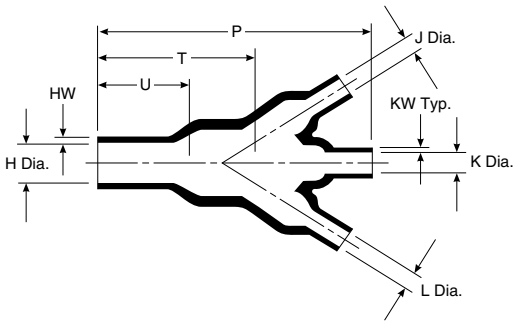

Applications

Provides strain relief and mechanical protection on cable harness assemblies.

Materials Available

Material*	Material Description	Precoating No.	Adhesive Part No.**
-3	Semirigid polyolefin	/42 or /86	S-1017 or S-1048
-4	Flexible polyolefin	/42 or /86	S-1017 or S-1048
-12	Fluoroelastomer	N/A	S-1255-04
-25	Fluid-resistant elastomer	/42 or /86 or /225	S-1017 or S-1048 or S-1125
-100	Polyolefin, Zerohal	/86 or /180	S-1048 or S-1030

*For more information, please see the appropriate material page in this section.
**For more information, please see section 5.

Product Dimensions

Part No.	H Min. a	H Max. b	J, K&L Min. a	J, K&L Max. b	P ±10% b
462A011	13.2 [.52]	6.6 [.26]	6.6 [.26]	3.6 [.14]	46.2 [1.82]
462A023	26.9 [1.06]	13.2 [.52]	13.2 [.52]	6.9 [.27]	93.2 [3.67]
462A034	38.6 [1.52]	18.8 [.74]	19.3 [.76]	9.7 [.38]	135.1 [5.32]
462A046	55.6 [2.19]	25.4 [1.00]	26.9 [1.06]	12.4 [.49]	192.0 [7.56]
462A060	91.4 [3.60]	54.6 [2.15]	45.7 [1.80]	27.4 [1.08]	390.4 [15.37]

Part No.	T ±10% b	U ±10% b	HW ±20% b	KW ±10% b
462A011	30.5 [1.20]	15.7 [.62]	1.52 [.06]	1.02 [.04]
462A023	57.2 [2.25]	33.0 [1.30]	2.54 [.10]	1.52 [.06]
462A034	88.9 [3.50]	45.7 [1.80]	3.05 [.12]	1.78 [.07]
462A046	121.9 [4.80]	71.1 [2.80]	4.57 [.18]	3.05 [.12]
462A060	254.0 [10.00]	127.0 [5.00]	7.11 [.28]	4.57 [.18]

Note: Coating is optional. As supplied dimensions appearing in table are for uncoated parts. When coating is added, entry diameters will be reduced by 1.5 [.06] max.

Catalog 1654025
Revised 3-13

www.te.com

Dimensions are shown for reference purposes only. Specifications subject to change.

Dimensions are in millimeters unless otherwise specified.

USA: +1 800 522 6752
Asia Pacific: +86 0 400 820 6015
UK: +44 800 267 666

For additional support numbers please visit www.te.com

462A421 to 424

Slimline Transition, One to Three Cables

As Supplied (a)

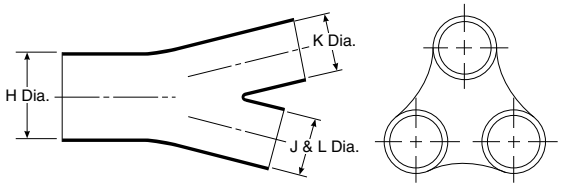

After Unrestricted Recovery (b)

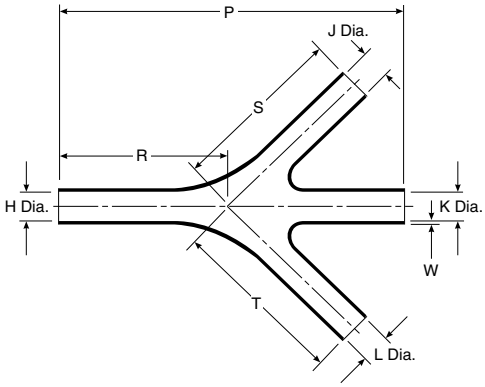

Applications

Provides strain relief and mechanical protection on cable harness assemblies.

Materials Available

Material*	Material Description	Precoating No.	Adhesive Part No.**
-50	Fluoroelastomer polymer blend	N/A	S-1125
-51	Elastomer polymer blend	/164	S-1124
-71	Flexible polyolefin	/42 or /86	S-1017 or S-1048

Product Dimensions

Part No.	H		J, K & L		W	P	R, S & T
	Min. a	Max. b	Min. a	Max. b	Nom. b	Nom. b	Nom. b
462A421	19.8 [.78]	6.6 [.26]	13.2 [.52]	6.6 [.26]	1.0 [.04]	85.9 [3.38]	42.9 [1.69]
462A422	34.3 [1.35]	11.4 [.45]	20.6 [.81]	11.4 [.45]	1.3 [.05]	135.6 [5.34]	67.8 [2.67]
462A423	60.2 [2.37]	20.1 [.79]	36.1 [1.42]	20.1 [.79]	1.5 [.06]	207.3 [8.16]	103.6 [4.08]
462A424*	99.8 [3.93]	33.3 [1.31]	54.9 [2.16]	33.3 [1.31]	1.8 [.07]	207.2 [8.16]	103.6 [4.08]

*-01 modification only

Materials Available

Material*	Material Description	Precoating No.	Adhesive Part No.**
-125	Fluoropolymer	—	S-1255-04

*For more information, please see the appropriate material page in this section.
**For more information, please see section 5.

Product Dimensions

Part No.	H		J, K & L		W	P	R, S & T
	Min. a	Max. b	Min. a	Max. b	Nom. b	Nom. b	Nom. b
462A421	19.8 [.78]	6.6 [.26]	13.2 [.52]	6.6 [.26]	1.0 [.04]	85.9 [3.38]	42.9 [1.69]
462A422	34.3 [1.35]	11.4 [.45]	20.6 [.81]	11.4 [.45]	1.3 [.05]	135.6 [5.34]	67.8 [2.67]
462A423	60.2 [2.37]	20.1 [.79]	36.1 [1.42]	20.1 [.79]	1.5 [.06]	207.3 [8.16]	103.6 [4.08]

Note: Coating is optional. As supplied dimensions appearing in table are for uncoated parts. When coating is added, entry diameters will be reduced by 1.5 [.06] max.

Dimensions are shown for reference purposes only. Specifications subject to change.

Dimensions are in millimeters unless otherwise specified.

USA: +1 800 522 6752
Asia Pacific: +86 0 400 820 6015
UK: +44 800 267 666

For additional support numbers please visit www.te.com

562A011 to 067

Transition, One to Four Cables

As Supplied (a)

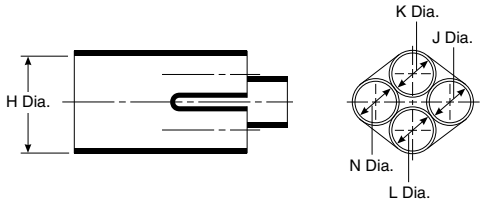

After Unrestricted Recovery (b)

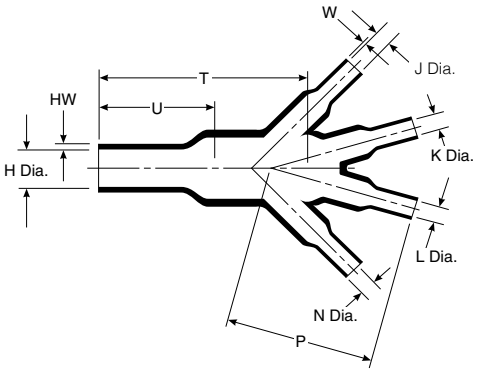

Applications

Provides strain relief and mechanical protection on cable harness assemblies.

Materials Available

Material*	Material Description	Precoating No.	Adhesive Part No.**
-3	Semirigid polyolefin	/42 or /86	S-1017 or S-1048
-4	Flexible polyolefin	/42 or /86	S-1017 or S-1048
-12	Fluoroelastomer	N/A	S-1255-04
-25	Fluid-resistant elastomer	/42 or /86 or /225	S-1017 or S-1048 or S-1125
-100	Polyolefin, Zerohal	/86 or /180	S-1048 or S-1030

*For more information, please see the appropriate material page in this section.
**For more information, please see section 5.

Product Dimensions

Part No.	H Min. a	H Max. b	J, K, L & N Min. a	J, K, L & N Max. b	P ±10% b	T ±10% b	U ±10% b	HW ±20% b	W ±20% b
562A011	13.2 [.52]	6.9 [.27]	6.6 [.26]	3.4 [.14]	24.1 [.95]	43.9 [1.73]	18.0 [.71]	1.52 [.06]	1.02 [.04]
562A022	19.3 [.76]	9.7 [.38]	9.4 [.37]	5.3 [.21]	35.6 [1.40]	43.2 [1.70]	23.1 [.91]	1.78 [.07]	1.02 [.04]
562A032	19.3 [.76]	9.7 [.38]	13.2 [.52]	6.9 [.27]	49.3 [1.94]	50.5 [1.99]	25.4 [1.00]	1.78 [.07]	1.52 [.06]
562A043	26.9 [1.06]	13.0 [.51]	13.2 [.52]	6.9 [.27]	49.3 [1.94]	65.8 [2.59]	33.5 [1.32]	2.54 [.10]	1.52 [.06]
562A054	38.6 [1.52]	18.5 [.73]	19.3 [.76]	9.7 [.38]	71.9 [2.83]	95.3 [3.75]	46.5 [1.83]	3.05 [.12]	1.78 [.07]
562A067	55.6 [2.19]	26.7 [1.05]	26.9 [1.06]	13.0 [.51]	101.6 [4.00]	135.1 [5.32]	65.5 [2.58]	4.57 [.18]	2.54 [.10]

Note: Coating is optional. As supplied dimensions appearing in table are for uncoated parts. When coating is added, entry diameters will be reduced by 1.5 [.06] max.

Catalog 1654025
Revised 3-13

www.te.com

Dimensions are shown for reference purposes only. Specifications subject to change.

Dimensions are in millimeters unless otherwise specified.

USA: +1 800 522 6752
Asia Pacific: +86 0 400 820 6015
UK: +44 800 267 666

For additional support numbers please visit www.te.com

QFT

Configurable Heat-Shrink Transition

Product Facts

- Configurable heat-shrink transition
- Low cost commercial polyolefin
- 80°C [176°F] shrink temperature
- High shrink ratio
- Specially engineered easy-to-use crimp tool

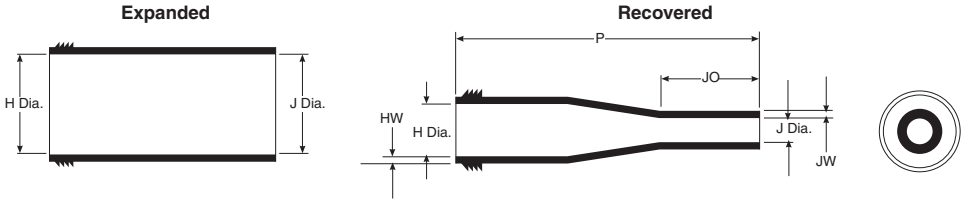

Applications

QFT heat-shrinkable transitions form a watertight seal protecting cable splices from corrosion and mechanical abuse while providing excellent electrical insulating properties. QFT products use special crimps that allow them to be employed as 1:2, 1:3, and even 1:4 transitions. With their high shrink ratio and crimps the configurable QFT product line can accommodate almost all of your transition needs with only 3 product sizes.

Operating Temperature Range

-20°C to 70°C
[-4°F to 158°F]

Specifications/Approvals

TE	RW 2008	Molded Part
	RT1050/1	Adhesive

Temperature Ratings

Operating temperature range	-20°C to 70°C [-4°F to 158°F] (125°C [257°F] without sealant)
Minimum recovery temperature	55°C [131°F]
Maximum storage temperature	40°C [104°F]

Dimensions Table

	H		J		P	JO	HW	JW
	Min.	Max.	Min.	Max.	+/- 10%	+/- 10%	+/- 20%	+/- 20%
QFT1	31.0 [1.22]	9.0 [.35]	31.0 [1.22]	4.4 [.17]	60.0 [2.36]	12.0 [.47]	1.5 [.06]	1.0 [.039]
QFT2	43.0 [1.69]	14.0 [.55]	43.0 [1.69]	7.0 [.28]	75.0 [2.95]	18.0 [.71]	1.8 [.07]	1.0 [.039]
QFT3	57.0 [2.24]	24.0 [.95]	57.0 [2.24]	12.0 [.47]	90.0 [3.53]	25.0 [.98]	1.8 [.07]	1.0 [.039]

Catalog 1654025
Revised 3-13

www.te.com

Dimensions are shown for reference purposes only. Specifications subject to change.

Dimensions are in millimeters unless otherwise specified.

USA: +1 800 522 6752
Asia Pacific: +86 0 400 820 6015
UK: +44 800 267 666

For additional support numbers please visit www.te.com

QFT (Continued)

Typical QFT Performance

	Property	Performance	Test method
Physical	Tensile strength	10 MPa (1500psi) minimum	ISO 37
	Ultimate elongation	250% minimum	ISO 37
	Longitudinal change	0 to 20% maximum	ISO 1183
	Specific gravity	1.4 maximum	ISO 1183
	Heat aging	Minimum 200% ultimate elongation	ISO 188
	168 hours at 120°C [248°F]	Tensile Strength 10 MPa min.	ISO 37
	Heat shock 4 hours at 105°C	No cracking, dripping or flowing	ASTM D 2671
Electrical	Dielectric strength	8MV/m minimum	IEC 243-1
Chemical	Fluid resistance 1	(24 +/- 2h immersion at 23C+/- 2C)	ISO 1817
	Engine Oil	(SAE 20W/50)	—
	Hydraulic Fluid Tensile Strength	10 MPa minimum	ISO 37
	Ultimate Elongation	200% minimum	—
	Fluid resistance 2	(30 +/- 3m immersion at 23C+/- 2C)	ISO 1817
	Automotive gasoline	(BS 4040)	—
	Diesel fuel	(BS 2869)	—
	Cleaning fluid	(TL 6850-07)	—
	Antifreeze	(Ethylene Glycol/Water 50/50 v/v)	—
	Engine cleaning fluid Tensile strength	(Gunk) 10 MPa minimum	ISO 37
	Ultimate elongation	200% minimum	—

Part Numbering System

QFT3 - 130/42 - 0*

- Color
- Adhesive
- Material
- Size
- Product name

*Available in bulk pack, part number QFT3-130/42-0-B500 (US and UK).

Ordering Information

Color	Standard	Black (-0)
	Code	0
Packaging	Standard	10 pieces per bag, 30 clips
	Bulk pack	500 pieces per box and 500 clips per bag (clips ordered separately) - contact TE for details
Crimp tool	QFT-Crimp-Tool-Manual (069172-000)	—

Catalog 1654025
Revised 3-13

www.te.com

Dimensions are shown for reference purposes only. Specifications subject to change.

Dimensions are in millimeters unless otherwise specified.

USA: +1 800 522 6752
Asia Pacific: +86 0 400 820 6015
UK: +44 800 267 666

For additional support numbers please visit www.te.com

SSB, D, T, F to 8S

Heavy Duty Breakout Boots

Product Facts

- Watertight
- Easy installation, requiring no special skills
- Compatibility with polyethylene, PVC, lead, steel, aluminum, standard Navy cable jackets, and copper wire and cable
- Four configurations and twelve sizes
- Minimum shrink temperature of 121°C [250°F]
- Type approval by:
  - ABS (American Bureau of Shipping)
  - DNV (Det Norske Veritas)
  - Lloyd's (Lloyd's Register of Shipping)

Applications

These flame-retardant heat-shrinkable transitions are especially designed for shipboard applications and meet or exceed all of the U.S. Navy specifications described in MIL-I-81765/1A (as of 5/02). The transitions are made of a rugged, thermally stabilized, modified polyolefin and factory-coated with a thermoplastic adhesive sealant. As a result, they offer excellent water sealing, mechanical abrasion-protection, corrosion-resistance, weatherproofing, and electrical insulation. The transitions replace tapes, epoxies, and grease in applications involving cable breakouts, transitions, and terminations.

Catalog 1654025
Revised 3-13

www.te.com

Dimensions are shown for reference purposes only. Specifications subject to change.

Dimensions are in millimeters unless otherwise specified.

USA: +1 800 522 6752
Asia Pacific: +86 0 400 820 6015
UK: +44 800 267 666

For additional support numbers please visit www.te.com

SSB, D, T, F to 8S (Continued)

Specifications/Approvals

Commercial	Military
RW-2024	MIL-STD-2003
	MIL-I-81765/1A

Product Dimensions

Description	Number of Legs	ID Base		ID legs		Leg	Length Body
		Min. Exp.	Max. Rec.	Min. Exp.	Max. Rec.		
SSB-1202 FR	2	40.64[1.60]	11.43 [0.45]	13.97[0.55]	3.81[0.15]	36.83[1.45]	62.23[2.45]
SSB-2002 FR	2	50.8[2.00]	35.56[1.40]	19.05[0.75]	8.89[0.35]	69.85[2.75]	88.90[3.50]
D3-9 FR	2	20.32[0.80]	9.39[0.37]	8.38[0.33]	2.79[0.11]	17.78[0.7]	50.8[2]
D14-30 FR	2	30.48[1.2]	15.24[0.6]	12.7[0.5]	4.32[0.17]	25.4[1]	63.5[2.5]
D50-100 FR	2	48.26[1.9]	22.86[0.9]	19.05[0.75]	7.62[0.3]	30.48[1.2]	76.2[3]
D200-400 FR	2	76.2[3]	38.1[1.5]	36.83[1.45]	12.7[0.5]	38.1[1.5]	88.9[3.5]
T3-9 FR	3	22.86[0.9]	9.14[0.36]	8.38[0.33]	2.29[0.09]	19.05[0.75]	50.80[2.0]
T14-23 FR	3	30.48[1.2]	17.78[0.70]	12.70[0.5]	4.57[0.18]	25.4[1]	60.96[2.40]
T14-50 FR	3	38.1[1.5]	12.7[0.5]	16.51[0.65]	4.06[0.16]	30.48[1.2]	76.2[2.3]
T42-100 FR	3	43.18[1.7]	22.86[0.9]	20.32[0.8]	4.83[0.19]	30.48[1.25]	57.15[2.25]
T150-300 FR	3	60.96[2.4]	35.56[1.4]	30.48[1.25]	12.70[0.5]	40.6[1.6]	88.90[3.50]
T-400 FR	3	81.28[3.2]	50.8[2]	35.56[1.4]	17.78[0.7]	40.6[1.6]	88.9[3.5]
T500-600 FR	3	124.46[4.90]	58.93[2.32]	50.8[2]	22.86[0.9]	50.8[2]	187.96[7.40]
F3-9 FR	4	22.86[0.9]	10.92[0.43]	7.11[0.28]	2.79[0.11]	19.05[0.75]	50.8[2]
F-23 FR	4	31.75[1.25]	20.32[0.8]	12.7[0.5]	5.08[0.2]	27.94[1.1]	63.50[2.50]
F42-60 FR	4	44.45[1.75]	25.4[1]	20.32[0.8]	8.13[0.32]	30.48[1.25]	63.50[2.50]
F75-100 FR	4	59.69[2.35]	25.4[1]	25.4[1]	8.89[0.35]	43.18[1.7]	165.1[6.5]
F133-200 FR	4	67.31[2.65]	35.56[1.4]	30.48[1.2]	10.92[0.43]	38.1[1.5]	91.44[3.6]
F150-400 FR	4	133.35[5.25]	76.2[3]	34.29[1.35]	13.97[0.55]	76.2[3]	152.4[6]
6S100-200 FR	6	60.96[2.4]	36.83[1.45]	20.32[0.8]	8.89[0.35]	69.85[2.75]	86.36[3.4]
8S23-75 FR	8	35.56[1.4]	21.59[0.85]	10.16[0.4]	3.3[0.13]	30.48[1.25]	50.8[2]
8S14-50 FR	8	57.15[2.25]	21.59[0.85]	14.22[0.56]	3.3[0.13]	30.48[1.25]	50.8[2]
8S42-100 FR	8	63.50[2.50]	21.59[0.85]	22.1[0.87]	3.3[0.13]	30.48[1.25]	50.8[2]

Catalog 1654025
Revised 3-13

www.te.com

Dimensions are shown for reference purposes only. Specifications subject to change.

Dimensions are in millimeters unless otherwise specified.

USA: +1 800 522 6752
Asia Pacific: +86 0 400 820 6015
UK: +44 800 267 666

For additional support numbers please visit www.te.com

202W302 to 342

Heat-Shrink Bobbins

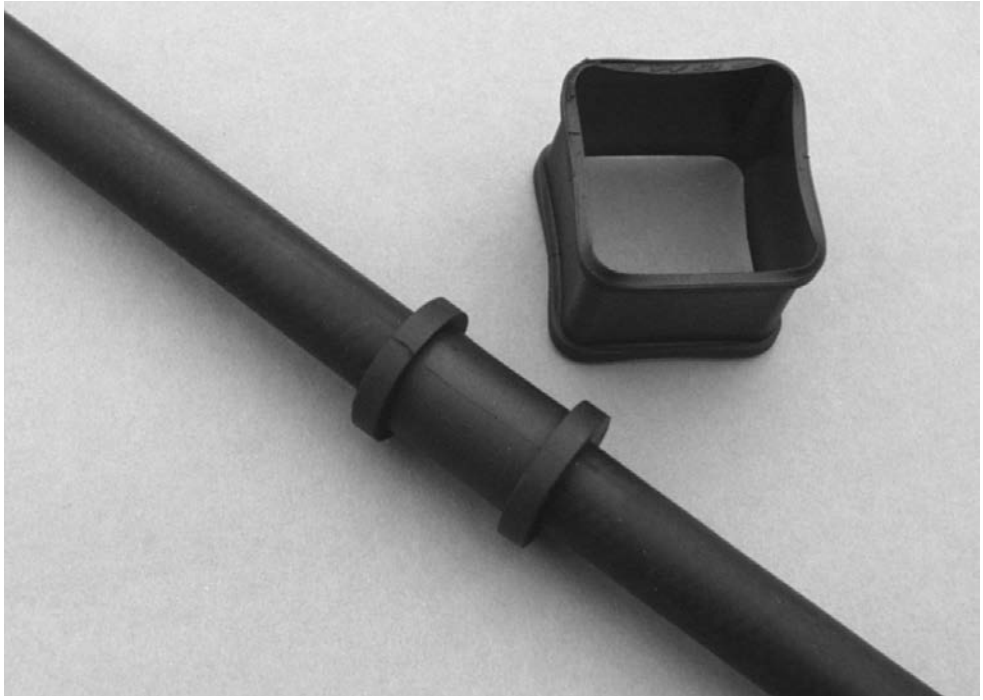

Product Facts

- Good abrasion resistance
- Fits range of diameters
- Excellent location, cushioning and protection of cable or hoses from P clips and wire ties
- Low cost, high volume installation
- Shrinks onto hose/pipe/wire harnesses
- Good mechanical, thermal and chemical properties
- Stays in place
- No expensive tooling required

As Supplied (a)

After Unrestricted Recovery (b)

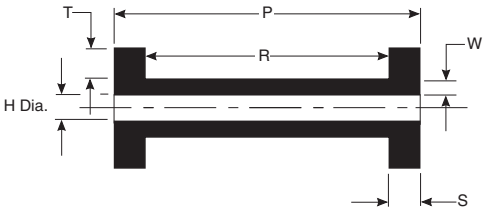

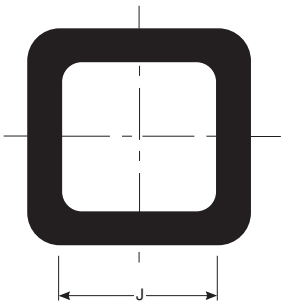

Square expanded = -130 material

Circular expanded = -12 and -25 material
-3, -4

Catalog 1654025
Revised 3-13

www.te.com

Dimensions are shown for reference purposes only. Specifications subject to change.

Dimensions are in millimeters unless otherwise specified.

USA: +1 800 522 6752
Asia Pacific: +86 0 400 820 6015
UK: +44 800 267 666

For additional support numbers please visit www.te.com

202W302 to 342 (Continued)

Materials Available

Material	Material Description	Precoating No.	Adhesive Part No.
-3	Polyolefin, semi-rigid	/42, /86	S-1017, S-1048
-4	Polyolefin, flexible	/42, /86	S-1017, S-1048
-12	Fluoroelastomer	N/A	S-1255-04
-25	Fluid resistant elastomer	/86 or /225	S-1017 or S-1048 or S-1125
-130	Flexible polyolefin	/42, /86	S-1017

Product Dimensions

Part No.	H		J	P	R	S	T	W	Recommended Hose Sizes	
	Min. a	Max. b	Min. a	±10% b	±10% b	±10% b	±10% b	±20% b	Min.	Max.
202W302	29.0 [1.142]	9.5 [.374]	29.0 [1.142]	35.0 [1.378]	25.0 [.984]	5.0 [.197]	3.0 [.118]	1.5 [.059]	11.0 [.433]	25.0 [.984]
202W312	39.0 [1.535]	12.7 [.500]	39.0 [1.535]	35.0 [1.378]	25.0 [.984]	5.0 [.197]	3.0 [.118]	2.0 [.079]	14.0 [.551]	34.0 [1.339]
202W321	10.0 [.394]	3.0 [.118]	10.0 [.394]	29.0 [1.142]	23.0 [.906]	3.0 [.118]	3.0 [.118]	1.5 [.059]	4.0 [.157]	8.0 [.315]
202W331	19.0 [.748]	6.4 [.252]	19.0 [.748]	29.0 [1.142]	24.0 [.945]	2.5 [.098]	2.0 [.079]	1.5 [.059]	8.0 [.315]	17.0 [.669]
202W342	54.0 [2.126]	18.0 [.709]	54.0 [2.126]	35.0 [1.378]	25.0 [.984]	5.0 [.197]	3.0 [.118]	2.0 [.079]	20.0 [.787]	48.0 [1.889]

Note: Coating is optional. As supplied dimensions appearing in table are for uncoated parts. When coating is added, entry diameters will be reduced by 1.5 [.06] max.

Catalog 1654025
Revised 3-13

www.te.com

Dimensions are shown for reference purposes only. Specifications subject to change.

Dimensions are in millimeters unless otherwise specified.

USA: +1 800 522 6752
Asia Pacific: +86 0 400 820 6015
UK: +44 800 267 666

For additional support numbers please visit www.te.com

400W242

Heat-Shrink Positioning Ring

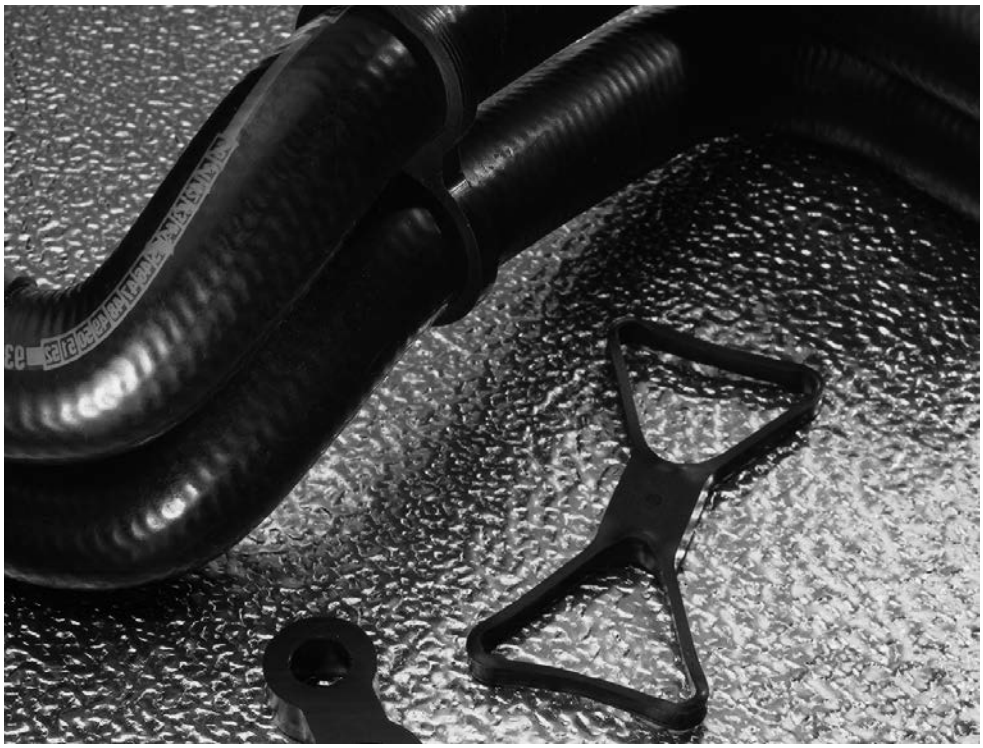

Product Facts

- Easy to install
- Bundles hoses/pipe
- Fits range of diameters due to high expansion
- Low cost, high volume installation
- Shrinks onto hose/pipe
- Minimum distance between substrates
- Good mechanical, thermal and chemical properties
- Push on fit to hose/pipe
- Stays in place when installed
- No expensive tooling required
- Keeps hoses/pipes together, optimizing space
- Twinning two hoses/pipes rationalizes part descriptions
- Hose/pipe can be orientated correctly for ease of fitting to vehicle
- Vibration damping

As Supplied (a)

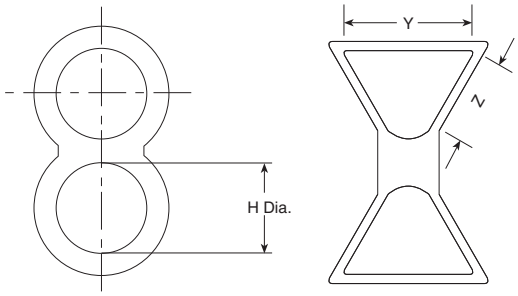

-3, -4, -25, -100 -130

After Unrestricted Recovery (b)

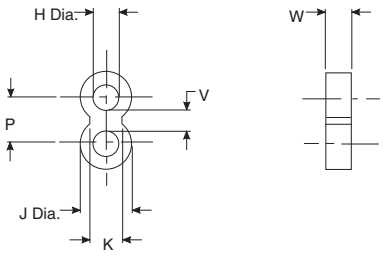

Catalog 1654025
Revised 3-13

www.te.com

Dimensions are shown for reference purposes only. Specifications subject to change.

Dimensions are in millimeters unless otherwise specified.

USA: +1 800 522 6752
Asia Pacific: +86 0 400 820 6015
UK: +44 800 267 666

For additional support numbers please visit www.te.com

400W242 (Continued)

Materials Available

Material	Material Description	Precoating no.	Adhesive part no.
-3	Polyolefin, semi-rigid	/42, /86	S-1017 or S-1048
-4	Polyolefin, flexible	/42, /86	S-1017 or S-1048
-25	Elastomer, fluid resistant	/86, /225	S-1017 or S-1048
-100	Polyolefin, Zerohal	-100-CS1972 (S1030 tape supplied in bag)	S-1030
-130	Flexible polyolefin	/42, /86	S-1017

As supplied dimensions are for uncoated parts, when coating is added, entry diameters will reduce by 1.5 [.06] max.

Part Numbering System

400W242 -/**-0**

- **Adhesive Slash Number** (if required see compatibility chart)
- **Material Dash Number** (see compatibility chart)
- **Base Part Number**

Product Dimensions

Part No.	H Min. a	H Max. b	J Max. b	K ± 1.2 b	P ± 1.7 b	V ± 0.45 b	W ± 1 b	Y* ± 2 a	Z* ± 2 a
400W242	28 [1.102]	10.2 [.402]	19.3 [.760]	12 [.472]	17 [.669]	7.0 [.276]	10 [.394]	29 [1.142]	25 [.984]

*Applicable for -130 only.

Catalog 1654025
Revised 3-13

www.te.com

Dimensions are shown for reference purposes only. Specifications subject to change.

Dimensions are in millimeters unless otherwise specified.

USA: +1 800 522 6752
Asia Pacific: +86 0 400 820 6015
UK: +44 800 267 666

For additional support numbers please visit www.te.com

RayOLOn Kits

Roll-On Sealing Sleeve

Product Facts

- Heatless sealing solution
- Re-useable sealing solution
- Roll-on to seal, roll-off to re-enter
- Enhanced sealing with gel strips
- Protection of connectors and splices against corrosion
- Available in many conveniently packaged kits

Applications

RayOLOn re-useable roll-on sealing sleeves are a family of products designed to protect connectors, electrical cable splices, and other cylindrical substrates from harsh environmental elements like salt spray and water moisture. RayOLOn sleeves are a part of TE "heatless" sealing products that require no heat guns or torches. This is useful in the areas where the use of motorized heat sources or open flames are prohibited or undesirable.

RayOLOn sealing sleeves provide the sealing of the substrates by simply rolling the sleeve over the area to be protected. If the substrate requires servicing, the sleeve can be rolled off to provide access to the component under the sleeve. After the service is completed, the sleeve can be rolled on the part again to provide the protection. This operation may be done many times throughout the life of the sleeve providing time and material cost savings.

Operating Temperature Range

-40°C to 70°C
[-40°F to 158°F]

Specifications and Approvals

TE	RW-3031

Temperature Ratings

Continuous operating temperature range	-40°C to 70°C [-40°F to 158°F]
Short term temperature exposure	-63°C to 90°C [-81°F to 194°F]
Minimum installation	-25°C [-13°F]

Sleeve Dimensions Inches (millimeters)

Base Part No.	Available Kits	Dimensions (Reference)		Recommended Use Range	Connection Length
		Diameter	Lengths		
LNCL-11-125	GK	0.51 [13.0]	4.92 [125]	0.22 - 0.68 [6 - 17]	3.00 [75]
LNCL-11-205	GK	0.51 [13.0]	8.07 [205]	0.22 - 0.68 [6 - 17]	6.00 [150]
LNCL-12-140	GK, CK-N	0.56 [14.2]	5.51 [140]	0.48 - 0.90 [12 - 23]	4.00 [100]
LNCL-12-240	GK, CK-N	0.56 [14.2]	9.45 [240]	0.48 - 0.90 [12 - 23]	7.00 [175]
LNCL-13-155	GK, TK-8	0.75 [19.0]	6.10 [155]	0.69 - 1.20 [18 - 30]	4.00 [100]
LNCL-13-305	GK	0.75 [19.0]	12.00 [305]	0.69 - 1.20 [18 - 30]	9.00 [225]
LNCL-14-185	GK, TK-7	1.02 [25.9]	7.28 [185]	0.96 -1.50 [25 - 38]	5.00 [125]
LNCL-14-355	GK	1.02 [25.9]	14.00 [355]	0.96 -1.50 [25 - 38]	10.0 [250]
LNCL-15-185	GK, TK-1, TK-5, TK-6	1.45 [36.8]	7.28 [185]	1.40 - 2.00 [36 - 46]	5.00 [125]
LNCL-15-260	GK, SS	1.45 [36.8]	10.2 [260]	1.40 - 2.00 [36 - 46]	7.50 [190]
LNCL-15-450	GK, SS	1.45 [36.8]	17.72 [450]	1.40 - 2.00 [36 - 46]	12.0 [300]

Refer to TE specification control drawing LNCL-XX-125 thru LNCL-XX-450 for more details.
*TE Gel and Sealant product information available at www.te.com

Dimensions are shown for reference purposes only. Specifications subject to change.

Dimensions are in millimeters unless otherwise specified.

USA: +1 800 522 6752
Asia Pacific: +86 0 400 820 6015
UK: +44 800 267 666

For additional support numbers please visit www.te.com

RayOLOn Kits (Continued)

Typical RayOLOn Roll-On Sealing Sleeve Properties

	Property	Performance	Test method
Physical/ Chemical	Tensile strength	8.3 MPa (1200 psi) minimum	ASTM D 2671
	Ultimate elongation	100 % minimum	ASTM D 412
	Density	1.1 g/cm3 maximum	ASTM D 792
	Water absorption 24 hours at 23°C [73°F]	0.5 % maximum	ASTM D 570
	Flammability	40 mm/min maximum	ASTM D 635
Electrical	Dielectric strength	90 kV/cm (225 V/mil) minimum	ASTM D 149
	Volume resistivity	1x1012 Ω-cm	ASTM D 257

Refer to TE specification RW-3031 for more requirements and performance information.
Notes:
1. The sleeve is not intended to be heated during the installation process.
2. DO NOT CUT LNCL roll-on sealing sleeve.
3. In case of a conflict between this data sheet and RW-3031, RW-3031 takes precedence.
4. Not recommended for extended exposure to hydrocarbon based fuel or fluids.

Part Numbering System

LNCL - XX - XXX - XX - XX

- XX — Configuration Designator (blank if not required)
- XX — Kit Designator
- XXX — Length of Sleeve
- XX — Diameter Size Designator
- LNCL — Product Family Name

Kits

GK—General kit:	Roll-on sleeve, gel strip, cable tie, core tube, installation instruction
CK—Connector sealing kit:	Roll-on sleeve, cable tie, connector flange cover, gel strip, installation instruction
TK—Panel boot sealing kit:	Roll-on sleeve, ferrule, gel strip, cable tie, installation Instruction
SS—Ship-or-shore kit:	Roll-on sleeve, connection shield, installation instruction

Note: Not all sizes and lengths are available for all kit combinations. Please refer to the table on the previous page.
Special bulk packaging can be available.

Catalog 1654025
Revised 3-13

www.te.com

Dimensions are shown for reference purposes only. Specifications subject to change.

Dimensions are in millimeters unless otherwise specified.

USA: +1 800 522 6752
Asia Pacific: +86 0 400 820 6015
UK: +44 800 267 666

For additional support numbers please visit www.te.com

SEB

Raychem Side Entry Bushing (SEB)

Pre-coiled side entry reusable silicone bushing designed to be used in high temperature applications where tape or other molded grommets are used.

One strip of this Side Entry Bushing replaces as much as 6 feet and 40 wraps of traditional tapes. The material is crosslinked and thermoformed to naturally conform to the tight bundle configuration of its application.

The standard Side Entry Bushing has no adhesive layer, so it is easily removed and can be re-used often after repairs have been made.

Product Facts

- **Fewer wraps needed than conventional silicone tapes**
- **High temperature resistant silicone material rated to 180˚C**
- **Trim to fit capabilities. Fit any size saddle clamp/wire bundle combination**
- **Thermally formed so it naturally conforms to circular wire bundles**
- **Re-usable**
- **6 standard sizes available**
- **No adhesive layer for easy removal**

Applications

Used in a non-environmentally sealed backshell (also known as a saddle clamp) and in clamping and wire management applications

Standards & Specs

Conforms to Mil Standard AMS-DTL-23053/10 and TE RT-1140

Ordering Information

25 per bag

Materials

Flexible, flame-retardant, silicone elastomer strip

Electrical

Volume resistance:
10E11 OHM-CM min.

Dielectric strength:
350 V/mil. min.

Operating temperature range:
-75°C to +180°C

Physical or Other Properties

Durometer Shore A:
60 +/- 5

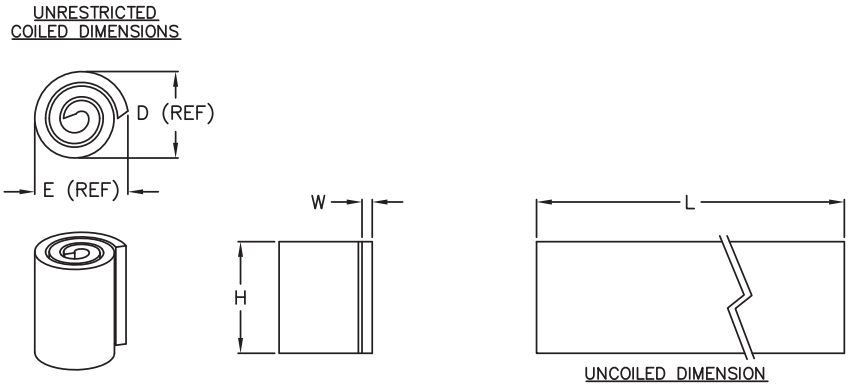

Part Numbers

Part Number	E Ref	D Ref	H ± 10%	L±10%	W±10%	Bundle O.D. Minimum
SEB-A	.27 [6.9]	.30 [7.6]	.40 [10.2]	1.00 [25.4]	.06 [1.5]	.05 [1.3]
SEB-B	.35 [8.9]	.40 [10.2]	.40 [10.2]	2.00 [50.8]	.06 [1.5]	.05 [1.3]
SEB-C	.48 [12.2]	.53 [13.5]	.50 [12.7]	3.00 [76.2]	.06 [1.5]	.05 [1.3]
SEB-D	.55 [14.0]	.60 [15.2]	.60 [15.2]	4.00 [101.6]	.06 [1.5]	.10 [2.5]
SEB-E	.65 [16.5]	.70 [17.8]	.60 [15.2]	6.00 [152.4]	.06 [1.5]	.30 [7.6]
SEB-F	.85 [21.6]	.88 [22.4]	.60 [15.2]	9.00 [228.6]	.06 [1.5]	.30 [7.6]

Dimensions are in inches, metric in brackets.
Number of wraps will vary for each size.

Catalog 1654025
Revised 3-13

www.te.com

Dimensions are shown for reference purposes only. Specifications subject to change.

Dimensions are in millimeters unless otherwise specified.

USA: +1 800 522 6752
Asia Pacific: +86 0 400 820 6015
UK: +44 800 267 666

For additional support numbers please visit www.te.com

shrinkHOoP

Cable Clamp Heat-Shrink Grommet

Product Facts

- Less assembly time
- Superior strain-relief
- Fewer errors — less rework
- No build-up taping or feeding wire through grommet
- Typical installation in just 10-20 seconds
- Re-expandable I.D. allows wire addition to a cable bundle

Applications

shrinkHOoP grommet (URHR) is an ultra high ratio heat-shrinkable-strain-relief grommet that can be placed over the cable assembly after the connector pinning operation is completed. The ultra-high expansion ratio material conveniently fills the space between the clamp type connector accessory and the cable. (When clamped into position, shrinkHOoP grommet provides strain relief that is more consistent and convenient than many conventional practices — for example, taping, grommet, or tape/grommet combination). The high ratio conformity of shrinkHOoP grommets will match most typical cable configurations from single conductor to the high density multiple conductor arrangements.

With shrinkHOoP grommet, repairs and rework are a snap – simply heat the grommet until soft, slide a NON-METALLIC probe through the center of the wire bundle (enlarging the grommet I.D.). Once cooled, the grommet will remain open allowing wires to be added, removed or reworked. The system can then be checked, the grommet reheated (shrinking it down again), positioned, and clamped in place.

Operating Temperature Range

-55°C to 135°C
[-67°F to 275°F]

Catalog 1654025
Revised 3-13

www.te.com

Dimensions are shown for reference purposes only. Specifications subject to change.

Dimensions are in millimeters unless otherwise specified.

USA: +1 800 522 6752
Asia Pacific: +86 0 400 820 6015
UK: +44 800 267 666

For additional support numbers please visit www.te.com

shrinkHOoP (Continued)

Specifications/Approvals

RW

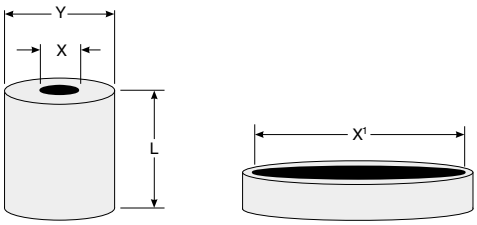

Product Dimensions Inches (millimeters)

Part No.	I.D. Expanded (X1) min.	I.D. Recovered (X) max.	O.D. (Y) Ref.	Length (L) Ref.	Wt. (gm) Ref.	Notes
URHR-1	1 [25]	.08 [2.1]	0.25 [6]	0.5 [13]	0.75	a) Recovered length will allow for 1.91 [0.075] either side of the collar, minimum in most cases.
URHR-2	1.23 [31]	.10 [2.6]	0.375 [10]	0.5 [13]	1	
URHR-3	1.44 [37]	.14 [3.6]	0.5 [13]	0.5 [13]	1.5	
URHR-4	1.85 [47]	0.18 [4.7]	0.562 [14]	0.75 [19]	3.5	
URHR-5	2 [51]	0.20 [5.1]	0.812 [21]	0.75 [19]	5	

Typical shrinkHOoP Grommet Performance

	Property	Performance	Test Method
Physical	Tensile strength	1500 psi (10.3 Mpa)	ASTM D-412
	Ultimate elongation	250% minimum	ASTM D-412
	Specific gravity	1.4 maximum	ASTM D-792
	Water absorption	0.5 % maximum	ASTM D-570 A
	Flammability	Pass	ASTM D-635
	Corrosion resistance	Pass	ASTM D-2671 A
	Low temperature flex 4 hours at - 55±1°C [67±2°F]	Pass	ASTM D-2671 C
	Heat resistance	200% ultimate elongation, minimum	ASTM D-2671
	168 hrs at 175±1°C [347±2°F]	1200 psi (8.3 Mpa) tensile strength, minimum	
	Heat shock 4 hrs at 225±2°C [437±5°F]	No cracking, dripping or flowing	ASTM D 2671
Elastic Memory	—	275% minimum expansion to 4 inch (10 cm) of a fully recovered test specimen, and 93% recovery of expanded specimen after oven conditioning for 1 minute at 150±2°C[302 ± 4°F]	—
Electrical	Dielectric strength	200 v/mil (7880 v/mm) minimum	ASTM D-876
	Volume resistivity	10 14 ohm-cm minimum	ASTM D-257
Chemical Fluid Resistance	—	200% ultimate Elongation, minimum 1200 psi (8.3 Mpa) tensile strength, minimum	ASTM F-146
	Flammability*	Avg. flame time = 30 sec. max Avg. burn length = 3 in. max. Avg. flame time from drippings = 3 sec. max	FAR part 25, Appendix F, part 1 (a), section 3

*Applies to sizes 2, 3, and 4 only

Dimensions are shown for reference purposes only. Specifications subject to change.

Dimensions are in millimeters unless otherwise specified.

USA: +1 800 522 6752
Asia Pacific: +86 0 400 820 6015
UK: +44 800 267 666

For additional support numbers please visit www.te.com

shrinkHOoP (Continued)

Selection Chart

Connector Series	Connector Size 8 (9)	10, 12 (11, 13)	14, 16 (15, 17)	18, 20 (19, 21)	22, 24, 28*
MIL-C-5015					
MS3451, 52, 56, 59	1	2	3	4	5
MS3450	2	3	4	5	*
MIL-C-26500**					
MS24266	1	2	3	4	5
MS24264, 265	2	3	4	5	*
MIL-C-26482					
MS3120, 21, 22, 26	1	2	3	4	5
MS3470, 71, 74, 75, 76	1	2	3	4	5
MS3124, MS3472	2	3	4	5	*
MIL-C-83723 Series I					
M83723/01 & 02, 05 & 06	1	2	3	4	5
07 & 08, 13 & 14, 23 & 24	1	2	3	4	5
M83723/03 & 04	2	3	4	5	*
MIL-C-83723 Series II					
M83723/17 & 18, 23 & 24	1	2	3	4	5
M83723/12 & 20, 21 & 22	2	3	4	5	*
MIL-C-83723 Series III					
M83723/71 & 72 thru 97 & 98	1	2	3	4	5
M83723/66, 67, 68 & 69	2	3	4	5	*
MIL-C-38999 Series I					
MS27469	1	2	3	4	5
MS27466, 68, 96, 27505, 27656	2	3	4	5	*
MIL-C-38999 Series II					
MS27472, 97, 98, 27508, 27513	1	2	3	4	5
MS27473, 84, 27474	2	3	4	5	*
MIL-C-38999 Series III					
38999/26	1	2	3	4	5
38999/20, 24	3	4	5	5	*
Boeing					
BACC45, F, M, N, P, R, S, T	—	2	3	4	5
BACC 63X	—	3	4	5	*
Boeing					
DC39, 31, 34, 35, 50-57	1	2	3	4	5
DC32, 33, 36, 37, 60, 61, 62, 63	2	3	4	5	*

* Consult TE for availability of larger sizes.
** Note: cable support clamp I.D. may effect the size of shrinkHOoP grommet selected.

Catalog 1654025
Revised 3-13

www.te.com

Dimensions are shown for reference purposes only. Specifications subject to change.

Dimensions are in millimeters unless otherwise specified.

USA: +1 800 522 6752
Asia Pacific: +86 0 400 820 6015
UK: +44 800 267 666

For additional support numbers please visit www.te.com

Ordering Information

TE has acquired XL Technologies. Use the information in the following table to convert the XL part number into the new TE product description.

Description XL Part No.	Convert to Description
080EK025	SSC-2/239
080EK025-woA	SSC-2/U
137EK050	SSC-3/239
137EK050-woA	SSC-3/U
1-8117-2A	CES-2A-D1
1-8117-3A	CES-2A-T1
1-8117-4A	CES-2A-F1
200EK075	SSC-4/239
200EK075-woA	SSC-4/U
20432242	CES-4/HR-3
2-8115-2A	CES-2-D1A
2-8115-2AOE	CES-2-D1A
2-8115-2B	CES-2-D1
2-8115-3A	CES-2-T1
2-8115-3B	CES-2-T1B
2-8115-4A	CES-2-F1A
2-8115-4B	CES-2-F1
2-8117-2A	CES-2A-D1
2-8117-2AOE	CES-2A-D1
2-8117-3A	CES-2A-T2
2-8117-4A	CES-2A-F2
2-8118-3A	CES-2-T1
2S-8115-2A	CES-2-D1A
2S-8115-3A	CES-2-T1
2S-8115-4A	CES-2-F1A
380EK150	SSC-6/239
380EK150woA	SSC-6/U
3-8115-2B	CES-3-D1
3-8115-3B	CES-3-T1
3-8115-4B	CES-3-F1
3-8118-4B	CES-3-F1
3A-8117-2B	CES-3A-D1
3A-8117-3B	CES-2A-T3
3A-8117-4B	CES-3A-F1
4-8115-2C	CES-4-D3
4-8115-3C	CES-4-T1
4-8115-4C	CES-4-F1
4-8117-2B	CES-3A-D2
4-8117-3B	CES-3A-T2
4-8117-4B	CES-3A-F2
4A-8117-2C	CES-4A-D3
4A-8117-3C	CES-4A-T3
4A-8117-4C	CES-4A-F3
52451-2X12A	91385-2/12
5-8115-3D	CES-5-T4
8114-1	CES-1
1/2/14	CES-1-2
8114-1-49R	CES-1R
8114-2	CES-2
8114-2-50R	CES-2R
8114-2S	CES-2
8114-3	CES-3
8114-3-51R	CES-3R
8114-3L	CES-3L
8114-3S	CES-3S
8114-4	CES-4
8114-4-54R	CES-4R
8114-4N	CES-4
8114-4S	CES-4S
8114-4S/C	CES-4S
8114-5	CES-5

Description XL Part No.	Convert to Description
8116-1	CES-2-A50
8116-1-49R	CES-2R-A50
8116-1A	CES-2-A50
8116-2	CES-2-A75
8116-2-50R	CES-2R-A75
8116-3	CES2-A100
8116-3-51R	CES-3R-A100
8116-3A	CES-3-A100
8116-4	CES-3-A150
8116-4-52R	CES-3R-A150
8116-4A	CES-4-A150
8116-5	CES-5-A250
8118-2	CES-2
91342-1	D3-9 FR
91342-12	D3-30 FR
91342-2	D14-30 FR
91342-23	D14-100 FR
91342-3X2.5	D50-200 FR
91342-3	D50-100 FR
91342-34	D50-400 FR
91342-4	D200-400 FR
91343-1	T3-9 FR
91343-2	T14-23 FR
91343-2A	T14-50 FR
91343-3	T42-100 FR
91343-4	T150-300 FR
91343-5	T-400 FR
91343-5678	T3-100 FR
91343-6	T500-600 FR
91343-910	T150-400 FR
91344-1	F3-9 FR
91344-1213	F3-23 FR
91344-1415	F42-100 FR
91344-1617	F75-200 FR
91344-2	F-23 FR
91344-3	F42-60 FR
91344-4	F75-100 FR
91344-5	F133-200 FR
91344-6	F150-400 FR
91346-3	6S100-200 FR
91346-30	202A111-3-0
91346-31	202A111-3/42-0
91346-32	202A111-3/86-0
91347-30	202A121-3-0
91347-31	202A121-3/42-0
91347-32	202A121-3/86-0
91348-1	8S23-75 FR
91348-2	8S14-50 FR
91348-3	8S42-100 FR
91348-30	202A132-3-0
91348-31	202A132-3/42-0
91348-32	202A132-3/86-0
91349-30	202A142-3-0
91349-31	202A142-3/42-0
91349-32	202A142-3/86-0
91350-30	202A153-3-0
91350-31	202A153-3/42-0
91350-32	202A153-3/86-0
91351-30	202A163-3-0
91351-31	202A163-3/42-0
91351-32	202A163-3/86-0

Dimensions are shown for reference purposes only. Specifications subject to change.

Dimensions are in millimeters unless otherwise specified.

USA: +1 800 522 6752
Asia Pacific: +86 0 400 820 6015
UK: +44 800 267 666

For additional support numbers please visit www.te.com

Ordering Information (Continued)

Description XL Part No.	Convert to Description
91352-30	202A174-3-0
91352-31	202A174-3/42-0
91352-32	202A174-3/86-0
91353-30	202A185-3-0
91353-31	202A185-3/42-0
91353-32	202A185-3/86-0
91354-30	202A196-3-0
91354-31	202A196-3/42-0
91354-32	202A196-3/86-0
913L87-30	202D921-3/-0
913L87-31	202D921-3/42-0
913L87-32	202D921-3/86-0
91387-30	202A921-3/-0
91387-31	202A921-3/42-0
913L47-30	202D121-3/-0
913L47-31	202D121-3/42-0
913L47-32	202D121-3/86-0
913L48-30	202D132-3/-0
913L48-31	202D132-3/42-0
913L48-32	202132-3/-86-0
913L49-30	202D142-3/-0
913L49-31	202D142-3/42-0
913L49-32	202D142-3/86-0
913L50-30	202D153-3-0
913L50-31	202D153-3/42-0
913L50-32	202D153-3/86-0
913L51-30	202D163-3-0
913L51-31	202D163-3/42-0
913L51-32	202D163-3/86-0
913L52-30	202D174-3-0
913L52-31	202D174-3/42-0
913L52-32	202D174-3/86-0
913L53-30	202D185-3-0
913L53-31	202D185-3/42-0
913L53-32	202D185-3/86-0
913L54-30	202D196-3-0
913L54-31	202D196-3/42-0
913L54-32	202D196-3/86-0
913L66-30	202D211-3-0
913L66-31	202D211-3/42-0
913L66-32	202D211-3/86-0
913L67-30	202D221-3-0
913L67-31	202D221-3/42-0
913L67-32	202D221-3/86-0
913L68-30	202D232-3-0
913L68-31	202D232-3/42-0
913L68-32	202D232-3/86-0
913L69-30	202D242-3-0
913L69-31	202D242-3/42-0
913L69-32	202D242-3/86-0
913L70-30	202D253-3-0
913L70-31	202D253-3/42-0
913L70-32	202D253-3/86-0
913L87-30	202D921-3-0
913L87-31	202D921-3/42-0
913L87-32	202D921-3/86-0
913R48-30	222A132-3-0
913R48-31	222A132-3/42-0
913R48-32	222A132-3/86-0
913R49-30	222A142-3-0

Description XL Part No.	Convert to Description
913R49-31	222A142-3/42-0
913R49-32	222A142-3/86-0
913R50-30	222A152-3-0
913R50-31	222A152-3/42-0
913R50-32	222A152-3/86-0
913R51-30	222A163-3-0
913R51-31	222A163-3/42-0
913R51-32	222A163-3/86-0
913R52-30	222A174-3-0
913R52-31	222A174-3/42-0
913R52-32	222A174-3/86-0
913RL48-30	222D132-3-0
913RL48-31	222D132-3/42-0
913RL48-32	222D132-3/86-0
913RL49-30	222D142-3-0
913RL49-31	222D142-3/42-0
913RL49-32	222D142-3/86-0
913RL50-30	222D152-3-0
913RL50-31	222D152-3/42-0
913RL50-32	222D152-3/86-0
913RL51-30	222D163-3-0
913RL51-31	222D163-3/42-0
913RL51-32	222D163-3/86-0
913RL52-30	222D174-3-0
913RL52-31	222D174-3/42-0
913RL52-32	222D174-3/86-0
913Y95-30	381A301-71/-0
913Y95-31	381A301-71/42-0
913Y95-32	381A301-71/86-0
913Y96-30	381A302-71/-0
913Y96-31	381A302-71/42-0
913Y96-32	381A302-71/86-0
HHW-1.3/6A	SST-6-13FR/97-0
HHW-13/6A	SST-6-13FR/97-0
HHW-15/12	SST-12-15FR/97-0
HHW-15/6	SST-6-15FR/97-0
HHW-15/9	SST-9-15FR/97-0
HHW-20/9	SST-9-20FR/97-0
HRSR-1	URHR-1
HRSR-2	URHR-2
HRSR-3	URHR-3
HRSR-4	URHR-4
HRSR-5	URHR-5
XHTA	RHW
XHTU	RHW
XMTA	RPRD

Dimensions are shown for reference purposes only. Specifications subject to change.

Dimensions are in millimeters unless otherwise specified.

USA: +1 800 522 6752
Asia Pacific: +86 0 400 820 6015
UK: +44 800 267 666

For additional support numbers please visit www.te.com

Sigmaform Product Dimensions

Conversion Table mm (in)

Commercial Description	Military Description	Number of Legs	I.D. base Minimum Expanded	I.D. base Maximum Recovered*	I.D. legs Minimum Expanded	I.D. legs Maximum Recovered*	Leg Length Recovered*	Base Length Recovered*
302V111	SSB-1202 FR	2	40.64 [1.60]	11.43 [.45]	13.97 [.55]	3.81 [.15]	36.83 [1.45]	62.23 [2.45]
302V163	SSB-2002 FR	2	50.80 [2.00]	35.56 [1.40]	19.05 [.75]	8.89 [.35]	69.85 [2.75]	88.90 [3.50]
402V101	T3-9 FR	3	22.86 [.90]	9.14 [.36]	8.38 [.33]	2.29 [.09]	19.05 [.75]	50.80 [2.00]
402V121	T14-23 FR	3	30.48 [1.20]	17.78 [.70]	12.70 [.50]	4.57 [.18]	25.40 [1.00]	60.96 [2.40]
402V142	T42-100 FR	3	43.18 [1.70]	22.86 [.90]	20.32 [.80]	4.83 [.19]	30.48 [1.25]	57.15 [2.25]
402V163	T150-300 FR	3	60.96 [2.40]	35.56 [1.40]	28.70 [1.13]	12.70 [.50]	69.85 [2.75]	88.90 [3.50]
402V185	T-400 FR	3	81.28 [3.20]	50.80 [2.00]	35.56 [1.40]	17.78 [.70]	73.15 [2.88]	88.90 [3.50]
402V196	T500-600 FR	3	124.46 [4.90]	58.93 [2.32]	50.80 [2.00]	22.86 [.90]	50.80 [2.00]	187.96 [7.40]
502V132	F-23 FR	4	31.75 [1.25]	20.32 [.80]	12.70 [.50]	5.08 [.20]	27.94 [1.10]	63.50 [2.50]
502V153	F-42-60 FR	4	44.45 [1.75]	25.40 [1.00]	20.92 [.80]	8.13 [.32]	30.48 [1.25]	63.50 [2.50]
502V163	F133-200 FR	4	67.31 [2.65]	35.56 [1.40]	30.48 [1.20]	10.92 [.43]	71.12 [2.80]	91.44 [3.60]
705V174	6S100-200 FR	6	60.96 [2.40]	36.83 [1.45]	20.32 [.80]	8.89 [.35]	69.85 [2.75]	86.36 [3.40]

*After unrestricted recovery

Dimensions are shown for reference purposes only. Specifications subject to change.

Dimensions are in millimeters unless otherwise specified.

USA: +1 800 522 6752
Asia Pacific: +86 0 400 820 6015
UK: +44 800 267 666

For additional support numbers please visit www.te.com

Table of Contents

Selection Guide 5-1
Adhesive/Sealant Product Characteristics Table 5-2, 5-3
Adhesive/Sealant Selection Table 5-4
Raychem RT-555 High Temperature Heat Shrink Tape 5-5, 5-6
Installation Guide 5-7

TE manufacturers Raychem adhesives and sealants to accommodate a wide range of applications, materials, and environmental conditions. Raychem adhesives include both thermosets and thermoplastics. Thermosets are curable two-part epoxies or crosslinked elastomers. Thermoplastics are hot-melt adhesives that flow when heated and set when cooled. They reflow when reheated to simplify component repair. TE also manufactures Raychem products that include a thermoplastic adhesive or a mastic-type sealant for water holdout applications. The sealants adhere to nonoily substrates and can be removed where reentry is necessary

Selection Guide

To determine the adhesive or sealant most compatible with a Raychem part, you must know the part's product type.

Use the Adhesive/Sealant Selection Table on page 5-4 to determine a Raychem part's product type and the adhesive/sealant compatible with that type.

Use the Adhesive/Sealant Product Characteristics Table (pages 14 and 15) to be sure the adhesive or sealant has the product characteristics your application requires.

To use the Selection Table, follow these four steps:

1. Under "Substrate Category," find the product material and product name/part number for the Raychem part.
2. Across the top of the table, find the part's product type and dash number.
3. At the intersection of the substrate category (product material/name/part number) and the product type (by designated dash number) you will find the part number for the most compatible adhesive for the Raychem part.
4. See the Adhesive/Sealant Product Characteristics Table to verify the characteristics of the adhesive/sealant you selected.

Note: Users should independently evaluate the suitability of the product for their application. Before ordering, check with TE for most current data..

Catalog 1654025
Revised 3-13

www.te.com

Dimensions are shown for reference purposes only. Specifications subject to change.

Dimensions are in millimeters unless otherwise specified.

USA: +1 800 522 6752
Asia Pacific: +86 0 400 820 6015
UK: +44 800 267 666

For additional support numbers please visit www.te.com

Adhesive/Sealant Product Characteristics Tables

Product Type	Precoat Designation	Type	Operating Temperature Range	Product Designation	Available Form/ Packaging
Thermosets					
S1006	—	Epoxy/polyamide two-part paste	-55°C to 135°C [-67°F to 275°F]	S1006 Kit 8	50-ml dual syringe
				S1006 Kit 1	Two 15-gram packs
				S1006 Kit 2	Four 7.5-gram packs
				S1006 Kit A	Ten 3-gram packs
S1009	—	Epoxy/polymercaptan two-part paste	-55°C to 135°C [-67°F to 275°F]	S1009 Kit A	Ten 3-gram packs
				S1009 Kit 8	50-ml dual syringe
S1255-04	—	One-part epoxy tape adhesive	-55°C to 200°C [-67°F to 392°F]	S1255-04	Tape [3/4 in. x .020 x 100 ft.]
S1125	—	Epoxy/polyamide two-part paste	-55°C to 150°C [-67°F to 302°F]	S1125 Kit 1	Five 10-gram packs
				S1125 Kit 2	Two 10-gram packs
				S1125 Kit 3	One 100-gram pack
				S1125 Kit 4	Five 10-gram packs
				S1125 Kit 5	One 10-gram pack
				S1125 Kit 8	50-ml dual syringe
S1264	—	Epoxy/polyamide two-part paste	-55°C to 150°C [-67°F to 302°F]	S1264 Kit 1	One 10-gram pack
				S1264 Kit 8	50-ml dual syringe
	/225	Precoated latent-curing epoxy/polyamide	-75°C to 150°C [-103°F to 302°F]	Precoat only on -25 molded parts	—
Thermoplastics					
S1017	/42	Hot-melt/ polyamide	-20°C to 60°C*** [-4°F to 140°F]	S1017	Tape [1 in. x .010 in. x 50 ft.]
S1030	/180	Hot-melt/ polyolefin	-80°C to 80°C [-112°F to 176°F]	S1030	Tape [3/4 in. x .010 in. x 33 ft.]
S1048	/86	Hot-melt, high performance	-55°C to 120°C [-67°F to 248°F]	S1048	Tape [1 in. x .026 in. x 100 ft.]
S1124	/164	Hot-melt/ elastomeric polymer	-55°C to 105°C [-67°F to 221°F]	S1124	Tape [3/4 in. x .018 in.x 100 ft.]
S1297	/97	Hot-melt/ polyamide adhesive	-20°C to 90°C] [-4°F to 194°F]	S1297	Tape [1 in. x .010 in. x 10 ft.]
Sealants					
S1278	—	Hot-melt grey butyl sealant	-40°C to 90°C [-40°F to 194°F]	S1278-01	Tape [1 in. x .062 in. x 25 ft.]
				S1278-02	Tape [3-3/4 in. x .125 in. x 10 ft.]
S1305	—	Hot-melt grey butyl sealant, FR	-40°C to 90°C [-40°F to 194°F]	S1305-01	Tape [1 in. x.062 in. x25 ft.]

*Shelf life from date of manufacture.
**For specific adhesion properties, see product specification sheets.
***Passes cold bend at -40°C [-40°F] per RT-4204.
****Only S-1006 Kit A conforms to A-A-56031.

For full details on installation procedures and curing conditions, please refer to the applicable TE Code of Practice or installation document.

Dimensions are shown for reference purposes only. Specifications subject to change.

Dimensions are in millimeters unless otherwise specified.

USA: +1 800 522 6752
Asia Pacific: +86 0 400 820 6015
UK: +44 800 267 666

For additional support numbers please visit www.te.com

Adhesive/Sealant Product Characteristics Tables (Continued)

Product Type	Pot Life at 23°C [73.4°F]	Curing Conditions	Shelf life* at or below 25°C [77°F]	Specifications**	Comments
Thermosets					
S1006	1 hr	96 hr at 20°C [68°F] min. or 1 hr at 120°C [248°F]	2 years 1 year Kit 8	RT-1006 RK-6612 A-A-56031****	General purpose harnessing adhesive. Not used on fluoroelastomers, silicone or PVDF
S1009	20 min.	24 hr at 20°C [68°F] min. or 1 hr at 95°C [203°F] 45 min at 120°C [248°F]	2 years 1 year Kit 8	RT-1009	General purpose harnessing adhesive. Not used on fluoroelastomers or silicone.
S1255-04	—	90 min at 155°C [311°F] or 15 min at 26 0°C [464°F]	1 year with refrigeration	RT-1014	One-part epoxy tape used with fluoroelastomer harness systems.
S1125	—	24 hr at 20°C min. or 1 hr at 85°C [185°F]	18 months	RT-1011 RK-6619 VG-95343	Good fluid-resistant epoxy used with System 25
S1264	90 min.	24 hr at 20°C min. or 1 hr at 85°C [185°F]	18 months	RT-1012	Tested to NBC requirements
/225	—	Cure during installation of molded parts	36 months	VG-95343 RK-6630	Precoated epoxy system System 25
Thermoplastics					
S1017	—	120°C [248°F]	Unlimited	RT-1050/1	General purpose harnessing adhesive Standard precoated adhesive for -3 and -4 molded parts
S1030	—	120°C [248°F]	Unlimited	RT-1050/6 RK-6017	Good low-temperature flexibility Available as a preinstalled tape for molded parts
S1048	—	160°C [320°F]	Unlimited	RT-1050/3 RK-6626	Requires high temperature to achieve bonding. Highest service temperature for hot melt
S1124	—	150°C [302°F]	Unlimited	RT-1050/13	Requires reflowing in an oven at 150°C [302°F] for 90 minutes. Designed to bond to -51 molded parts.
S1297	—	120°C [248°F]	Unlimited	RW-2019	General purpose harnessing adhesive Standard precoated adhesive in Sigmaform molded parts, CES and CSGA cable entry seals, and SST-FR heat-shrinkable tubing
Sealants					
S1278	—	110°C [230°F]	Unlimited	RW-2020	General purpose sealant and cable breakout area filler
S1305	—	110°C [230°F]	Unlimited	RW-2020	Halogen-free, flame-retardant sealant and cable breakout area filler

*Shelf life from date of manufacture.
**For specific adhesion properties, see product specification sheets.
***Passes cold bend at -40°C [-40°F] per RT-4204.
****Only S-1006 Kit A conforms to A-A-56031.

For full details on installation procedures and curing conditions, please refer to the applicable TE Code of Practice or installation document.

Catalog 1654025
Revised 3-13

www.te.com

Dimensions are shown for reference purposes only. Specifications subject to change.

Dimensions are in millimeters unless otherwise specified.

USA: +1 800 522 6752
Asia Pacific: +86 0 400 820 6015
UK: +44 800 267 666

For additional support numbers please visit www.te.com

Adhesive/Sealant Selection Table

Substrate Category	Product Name Examples	Molded Part Material Dash Number												
		-3	-4	-6	-8	-12	-25	-50	-51	-55	-71	-100	-125	-130
Polyolefin	RNF-100	S1006	S1006	—	—	—	—	—	—	—	S1006	—	—	S1006
	Versafit	S1009	S1009	—	—	—	—	—	—	—	S1009	—	—	S1009
	CRN	S1017	S1017	—	—	—	—	—	—	—	S1017	—	—	S1017
	BSTS	S1030	S1030	—	—	—	—	—	—	—	S1030	—	—	—
	SST	S1048	S1048	—	—	—	—	—	—	—	S1048	—	—	—
	HR	S1297	S1297	—	—	—	—	—	—	—	S1297	—	—	—
Fluoro-polymer	PVDF	S1009	S1009	—	S1009	—	S1125	—	—	—	S1009	—	S1009	—
		S1048	S1048	—	—	—	—	—	—	—	S1048	—	S1048	—
		S1125	S1125	—	—	—	—	—	—	—	S1125	—	S1125	—
	RT-555	—	—	—	—	S1255-04	—	—	—	S1255-04	—	—	S1255-04	—
	HCTE	—	—	—	—	S1255-04	S1125	—	—	S1255-04	—	—	—	—
	CONVOLEX	—	—	—	—	S1125	—	—	—	S1125	—	—	—	—
Vinyl	PVC	S1006	S1006	—	—	—	—	—	—	—	S1006	—	—	—
		S1009	S1009	—	—	—	—	—	—	—	S1009	—	—	—
		S1017	S1017	—	—	—	—	—	—	—	S1017	—	—	—
Elastomer	DR-25	—	—	—	—	—	S1125	S1125	S1125	—	—	—	—	—
	NT	S1006	S1006	—	—	—	—	—	S1124	—	S1006	—	—	—
		S1009	S1009	—	—	—	—	—	—	—	S1009	—	—	—
		S1017	S1017	—	—	—	—	—	—	—	S1017	—	—	—
	NT-FR	—	—	—	—	—	S1125	—	S1124	—	—	—	—	—
	SFR	—	—	*	—	—	—	—	—	—	—	—	—	—
	SRFR	—	—	*	—	—	—	—	—	—	—	—	—	—
	RW-200	—	—	—	—	S1255-04	—	—	—	S1255-04	—	—	S1255-04	—
	VPB	—	—	—	—	—	—	S1125	—	—	—	—	—	—
		—	—	—	—	—	—	S1255-04	—	—	—	—	—	—
Zerohal	XFFR	—	—	—	—	—	—	—	—	—	—	S1030	—	—
	ZHTM	—	—	—	—	—	—	—	—	—	—	S1030	—	—

Substrate Category	Product Name Examples	Molded Part Material Dash Number		
		-770	-780	-790
Nuclear Fluoropolymer	RT770	S1264	—	—
	RT780	—	S1255-04	—
	RT790	—	—	S1255-04

*GE RTV 108 used with SFR SRFR and -6 (silicone) molded parts.

Catalog 1654025
Revised 3-13

www.te.com

Dimensions are shown for reference purposes only. Specifications subject to change.

Dimensions are in millimeters unless otherwise specified.

USA: +1 800 522 6752
Asia Pacific: +86 0 400 820 6015
UK: +44 800 267 666

For additional support numbers please visit www.te.com

Raychem RT-555

High Temperature Heat Shrink Tape

The high temperature heat shrink tape is a bi-layer, side-entry, heat-recoverable sealing product whose length will shrink a predetermined percentage upon the application of heat in excess of 220˚C (428˚F).

Product Facts

- **Wrap around tape form Heat resistant to +200˚C**
- **Fluid resistant**
- **Seals up to 15 psi**
- **Peel strength of at least 10 lbs/in-width**
- **Recovers 35% minimum**
- **Convenient tape form accommodates sealing harnesses and connectors in the field**
- **4 widths available: 3/4”, 1”, 1 1/2” and 2”**
- **2 continuous lengths available: 25 and 50 feet**

Applications

Commercial Aerospace, Military, Offshore Drilling, Down Hole Wire harness systems requiring high fluid and high temperature resistance

Repair tape for wire harness bundles

Repair of rock and debris damage on landing gear wiring

Mechanical

Peel strength higher than 10 lbs/in-width

Pressure seal up to altitudes of 75000’ or 15 psi

Materials

The adhesive layer is a meltable fluoropolymer that will melt at the predetermined temperature lower than the recovery temperature of the tape backing.

Heat recoverable tape backing is made from high temperature crosslinked ETFE

Standards and Specs

TE Specification: RT-1381

Application Specification: TUS-41-3032 (Installation Guide)

Application Tooling

Raychem CV-1983 ThermoGun hot-air heating tool with TG-23, TG-24 reflectors

AD-1962 nozzle

Physical or Other Properties

Provided in side-entry heat-shrinkable tape form

The tape is suitable for use in wire harness systems requiring aggressive fluid and high temperature resistance.

Catalog 1654025
Revised 3-13

www.te.com

Dimensions are shown for reference purposes only. Specifications subject to change.

Dimensions are in millimeters unless otherwise specified.

USA: +1 800 522 6752
Asia Pacific: +86 0 400 820 6015
UK: +44 800 267 666

For additional support numbers please visit www.te.com

Raychem RT-555 (Continued)

Product Dimensions and Ordering Information

Product Offering

Part Number	Package Type	Package Quantity
RT-555-T.75-A260-25	tape	25 feet
RT-555-T.75-A260-50	tape	50 feet
RT-555-T1.0-A260-25	tape	25 feet
RT-555-T1.0-A260-50	tape	50 feet
RT-555-T1.5-A260-25	tape	25 feet
RT-555-T1.5-A260-50	tape	50 feet
RT-555-T2.0-A260-25	tape	25 feet
RT-555-T2.0-A260-50	tape	50 feet

TABLE OF DIMENSIONS			
PART DESCRIPTION	W	LENGTH FEET(MIN)	T
RT–555–T.75–A260–XX	.75 [18.75]	25,50	.016 [.41]
RT–555–T1.0–A260–XX	1.0 [25]	25,50	.016 [.41]
RT–555–T1.5–A260–XX	1.5 [38]	25,50	.016 [.41]
RT–555–T2.0–A260–XX	2.0 [51]	25,50	.016 [.41]

Dimensions in inches [mm]

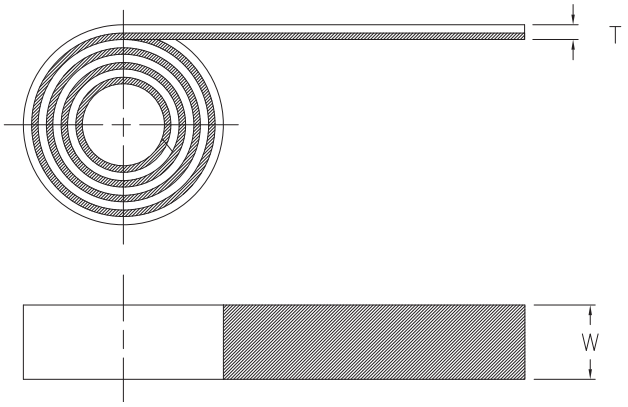

Dimensions are shown for reference purposes only. Specifications subject to change.

Dimensions are in millimeters unless otherwise specified.

USA: +1 800 522 6752
Asia Pacific: +86 0 400 820 6015
UK: +44 800 267 666

For additional support numbers please visit www.te.com

Installation Guide

installation Procedures

Preparation of the substrate depends on the part to be bonded.

Following are two preparation procedures. The first applies to plated metals and adapters; the second applies to polymer molded parts, cable jackets, and tubing materials.

Bonding between molded parts, plated metals and adapters

To ensure the best possible bond between a molded part and plated materials and adapters, degrease the end of the molded part which will recover onto the plated metal or adaptor with isopropyl alcohol or isopropanol (IPA) impregnated tissue wipe. NEVER abrade plated metals and adapters.

Where preheating of the plated metal or adapter is judged to be necessary for large and high heat sink terminations, care must be taken to ensure the connector insulation and primary wire insulation are not damaged. Ensure heat is directed to the metal area and all other areas are avoided. TE cannot be held responsible for damage caused during the preheating of plated metals or adapters.

Bonding between molded parts, cable jackets and tubing materials

To ensure the best possible bond between the molded part, cable jacket or tubing degrease the cable jacket in the area where the molded part will recover onto the cable using Isopropyl alcohol. (Approximately 30 mm). Abrade the cable jacket thoroughly in the same area with 100 grit emery cloth. The whole surface of the cable jacket should be abraded removing any print on the cable jacket. Remove loose particles from the abraded area using a dry tissue. DO NOT use a solvent wipe.

Ensure sufficient cable jacket has been abraded to incorporate the strip length requirement. Degrease the inner area of the molded part at each end thoroughly (Approximately 30mm) using Isopropyl alcohol. Abrade the inner area of the molded part at each end thoroughly (Approximately 30mm) with 100 grit emery cloth. Remove loose particles from the abraded area using a dry tissue. DO NOT use a solvent wipe.

Installation of heat shrink molded parts

For the installation of the wide range of TE heatshrink molded parts including straight, 45°, 90° and transitions refer to the appropriate Code of Practice Installation Procedures.

Installation of adhesives

For details of installation of the wide range of TE adhesives including epoxy, hot melt, tapes and pre-installed options refer to the appropriate Code of Practice Installation Procedures.

These Codes of Practice include information such as recommended tooling, installation temperatures, curing cycles and visual standards.

Heath and Safety

Adhere to local Codes and Regulations relating to Safe Working practices.

The installation should be carried out in a well ventilated area. Always wear heat resistant safety gloves when handling hot plastics and adhesives. The use of suitable protective gloves and barrier cream is recommended when using solvents.

Avoid prolonged repeated skin contact with solvents and always wash hands after using solvents. Care should be taken to wear safety glasses when using and handling chemical solvents. If eyes do become contaminated, flush with water and obtain medical assistance immediately. For specific handling precautions please consult appropriate TE material safety data sheet for adhesive being used.

Catalog 1654025
Revised 3-13

www.te.com

Dimensions are shown for reference purposes only. Specifications subject to change.

Dimensions are in millimeters unless otherwise specified.

USA: +1 800 522 6752
Asia Pacific: +86 0 400 820 6015
UK: +44 800 267 666

For additional support numbers please visit www.te.com

Engineering Notes

Catalog 1654025
Revised 3-13

www.te.com

Dimensions are shown for reference purposes only. Specifications subject to change.

Dimensions are in millimeters unless otherwise specified.

USA: +1 800 522 6752
Asia Pacific: +86 0 400 820 6015
UK: +44 800 267 666

For additional support numbers please visit www.te.com

Table of Contents

For high-performance sealing and strain relief, the perfect mate for a TE Connectivity molded part in a wiring application is a Raychem brand adapter.

TE offers a variety of adapters for applications in many industries, including aerospace, marine, and mass transit.

These adapters are:

- Available in many configurations to match applications
- Easy to install
- Ideal for high-reliability applications
- Kitted for customer convenience.

In this section we present Raychem brand spin-coupling adapters and Tinel-Lock adapters.

The Tinel-Lock adapter utilizes Raychem brand Tinel rings to terminate the overall shield to the adapter. The Tinel ring is a low-profile, high-strength, shape-memory-alloy shield-termination device available in many sizes to accommodate various entry sizes and shield configurations.

Tinel-Lock adapters are ideal for lightweight aerospace applications requiring repeated high-to-low temperature cycles.

Note: Users should independently evaluate the suitability of the product for their application. Before ordering, check with TE for most current data.

Adapter Fundamentals
Definitions 6-2
Types of Adapters 6-3, 6-4
Adapter Selection Process 6-5

Adapter Selection
Adapter Code . . . . . 6-6 to 6-15
Adapter Family 6-16
Part Number 6-17, 6-18
Material and Finish 6-19
Entry Size . . . . . 6-20 to 6-25
Tinel-Lock Ring 6-26
CRES-Lock Bands/BND Adapters 6-27

Adapter Products
Code 18 MIL-C-5015 (MS3100)
Braided Adapters 6-28, 6-29
Solid Adapters 6-30, 6-31
Spin-Coupling Adapters 6-32, 6-33
Tinel-Lock Adapters . . . . . 6-34 to 6-36
Code 21 MIL-C-26482 Series 1
Braided Adapters 6-37
Solid Adapters 6-38
Spin-Coupling Adapters 6-39
Tinel-Lock Adapters 6-40, 6-41
CRES-Lock Adapters/BND Adapters 6-42, 6-43
Code 32 MIL-C-22992
Braided Adapters 6-44, 6-45
Spin-Coupling Adapters 6-46
Tinel-Lock Adapters 6-47
CRES-Lock Adapters/BND Adapters 6-48, 6-49
Code 40 MIL-C-38999 Series III and IV
Braided Adapters 6-50, 6-51
Solid Adapters 6-52
Spin-Coupling Adapters 6-53
Tinel-Lock Adapters 6-54, 6-55
CRES-Lock Adapters/BND Adapters 6-56, 6-57
Code 41 MIL-C-38999 Series I and II
Braided Adapters 6-58, 6-59
Solid Adapters 6-60
Spin-Coupling Adapters 6-61
Tinel-Lock Adapters 6-62, 6-63
CRES-Lock Adapters/BND Adapters 6-64, 6-65
Code 54 MIL-C-5015 (MS3400), MIL-C-26482 Series 2, MIL-C-83723 Series I and III, MIL C-81703 Series III
Braided Adapters 6-66, 6-67
Solid Adapters 6-68
Spin-Coupling Adapters 6-69
Tinel-Lock Adapters 6-70, 6-71
CRES-Lock Adapters/BND Adapters 6-72, 6-73
Code 76 BS 9522 F0017 (Pattern 105)
Spin-Coupling Adapters 6-74
Tinel-Lock Adapters 6-75, 6-76
Raychem FlexiScreen Backshells 6-77, 6-78
HexaShield High-Performance EMC/EMI Adapters . . . . . 6-79 to 6-84
Raychem Spin Lock Variable Angle Backshell 6-85, 6-86

Catalog 1654025
Revised 3-13

www.te.com

Dimensions are shown for reference purposes only. Specifications subject to change.

Dimensions are in millimeters unless otherwise specified.

USA: +1 800 522 6752
Asia Pacific: +86 0 400 820 6015
UK: +44 800 267 666

For additional support numbers please visit www.te.com

Definitions

Introduction

For high-performance sealing and strain relief, the perfect mate for a TE molded part in a wiring application is a Raychem brand adapter.

TE offers a variety of Raychem brand adapters for applications in many industries, including aerospace, marine, and mass transit.

These adapters are:

- Available in many configurations to match applications
- Easy to install
- Ideal for high-reliability applications
- Kitted for customer convenience.

In this section we present Raychem brand spin-coupling adapters and Tinel-Lock adapters.

The Tinel-Lock adapter utilizes TE Tinel ring to terminate the overall shield to the adapter. The Tinel ring is a low-profile, high-strength, shape-memory-alloy shield-termination device available in many sizes to accommodate various entry sizes and shield configurations.

Tinel-Lock adapters are ideal for lightweight aerospace applications requiring repeated high-to-low temperature cycles.

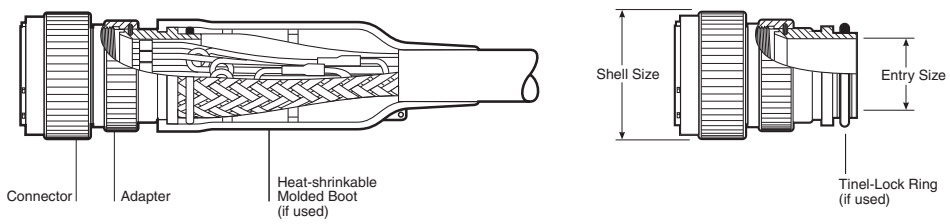

Adapter Type

TE offers four adapter types: solid (sometimes called “fixed”), spin-coupling, braided, and Tinel-Lock. Each is designed to offer a suitable interface between a connector and a heat-shrinkable molded part.

Adapter Code

A numerical code is used to identify connectors with similar adapter interfaces. This code is used to determine the adapter family and part number.

Adapter Part Number

The part number is the sequence of numbers and letters that describes the adapter family (or series), size, material, finish, and modifications. The part numbering system is explained on pages 6-17 and 6-18.

Adapter Family

TE offers several families (or series) of Raychem adapter products. Each Raychem adapter part number begins with an alphanumeric prefix denoting the Raychem product family.

Entry Size

Entry size is the diameter of the hole through which the cable enters into the adapter. For example, the 08 entry is 12.7 [0.5]. Entry sizes are specified on braided and Tinel-Lock adapters only.

Ring Designator

This is a two-letter code that is part of each Tinel-Lock adapter part number. It specifies the size of the Tinel-Lock ring suited to specific types of cable braid.

Shell Size

This is the size of a connector as specified by the connector manufacturer. It is normally a two-digit number between 08 and 24, although certain connectors are obtainable in either larger or smaller sizes and some use letter codes.

Order Number

This is a two-digit number that specifies the size of the adapter that will mate to the corresponding shell size of a connector. The order number is frequently the same as the connector shell size, but should be checked by reference to the appropriate product page(s) in this catalog.

Dimensions are shown for reference purposes only. Specifications subject to change.

Dimensions are in millimeters unless otherwise specified.

USA: +1 800 522 6752
Asia Pacific: +86 0 400 820 6015
UK: +44 800 267 666

For additional support numbers please visit www.te.com

Types of Adapters

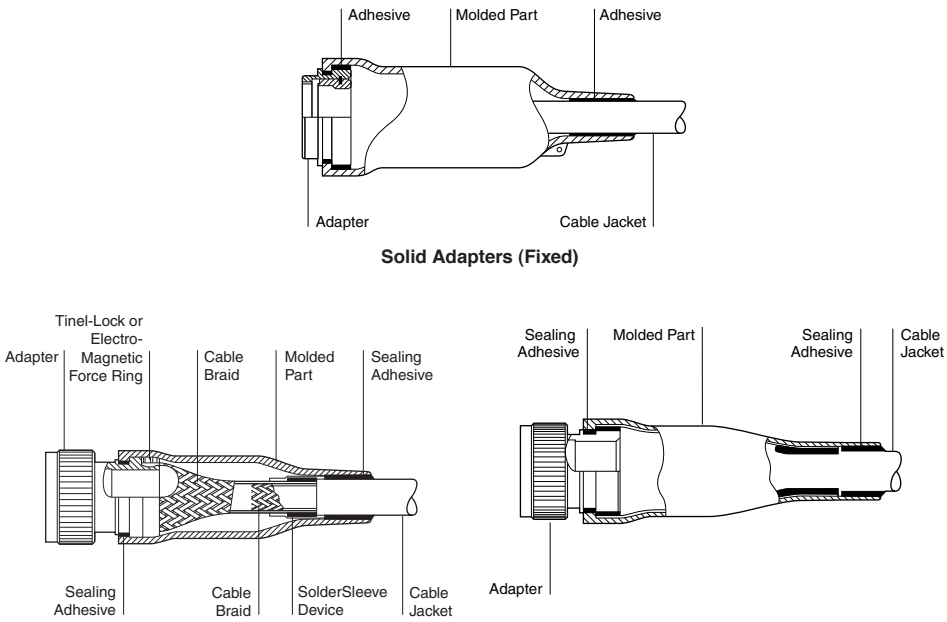

Adapter Types

TE offers several types of Raychem brand adapters for unscreened and screened termination systems. The choice is largely dependent upon the screening level required and the braid termination method.

The four principal adapter types are:

- Solid (fixed)
- Spin-Coupling
- Braided
- Tinel-Lock

Solid Adapters (Fixed)

Solid adapters are designed for use where no access is required; for example, when potting is necessary or a lower space profile is needed.

These adapters have a boot groove to accommodate a lipped heat-shrinkable boot. Repair cannot be made without removing the boot.

Spin-Coupling Adapters

Spin-coupling adapters are two-part components that have a rotatable coupling nut and a grooved body designed to accommodate lipped-type heat-shrinkable boots.

Spin-couplings with an appropriate molded part are used for environmental protection and strain relief of unscreened cable terminations. Cable repairs can be made without damaging the boot.

Braided Adapters

These are spin-coupling adapters that have a short length of tubular braided shield attached to the rear of the adapter. The braid is constructed from tinned copper wire and has a handling characteristic that enables it to be pulled down onto a wide range of cable diameters. This allows a standard entry size to be used with most cable sizes.

The shield is terminated to the cable braid using a SolderSleeve device, which provides screen continuity through to the connector. Straight, 45°, and 90° configurations are available.

Catalog 1654025
Revised 3-13

www.te.com

Dimensions are shown for reference purposes only. Specifications subject to change.

Dimensions are in millimeters unless otherwise specified.

USA: +1 800 522 6752
Asia Pacific: +86 0 400 820 6015
UK: +44 800 267 666

For additional support numbers please visit www.te.com

Types of Adapters (Continued)

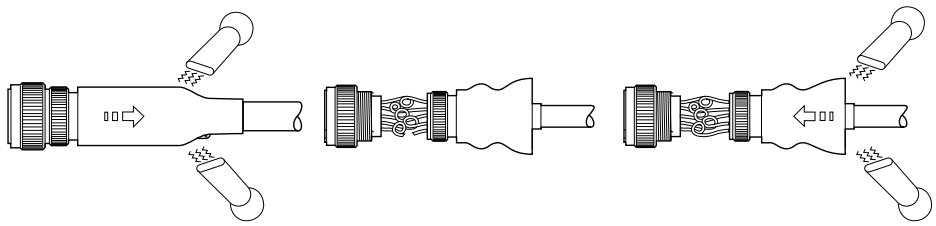

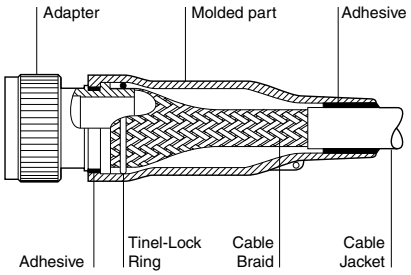

Tinel-Lock Adapters

Tinel-Lock Adapters

This termination system consists of a modified spin-coupling adapter with a Tinel-Lock ring. The Tinel-Lock ring is made from a special shape memory metal that shrinks uniformly when heated (see Application Tooling, section 10).

The Tinel-Lock ring is used to terminate copper cable braid directly onto the rear of the adapter. The adapter entry size and ring designator must be selected to suit the cable diameter and braid type.

The resulting 360° termination withstands severe shock, vibration, temperature cycling, and corrosion. Straight, 45°, and 90° configurations are available.

Roll-back Repair with Adapters

More than 85 percent of cable repairs are made within 75 mm [3.0] of the connectors—usually because of a broken pin or wire. By reheating the heat-shrinkable boot and unscrewing the adapter coupling nut, the boot can be “rolled back,” providing access to the rear of the connector for repair. This technique is applicable to spin-coupling, shielded, and Tinel-Lock adapters.

Dimensions are shown for reference purposes only. Specifications subject to change.

Dimensions are in millimeters unless otherwise specified.

USA: +1 800 522 6752
Asia Pacific: +86 0 400 820 6015
UK: +44 800 267 666

For additional support numbers please visit www.te.com

Adapter Selection Process

Step-by-Step Selection Process

Selecting an adapter for your application involves a five-step process:

1. From the connector number, determine:
   - Order number (shell size)
   - Material
   - Plating
2. Decide what adapter type you need for the connector.
3. Determine the connector code for that adapter type. (Use Table A, B, or C on pages 6-6 to 6-15).
4. Determine the adapter family for that connector code. (Use Table D on page 6-16).
5. Build the adapter part number. (See page 6-17).

The chart below will lead you through these steps.

Adapter Selection Flowchart

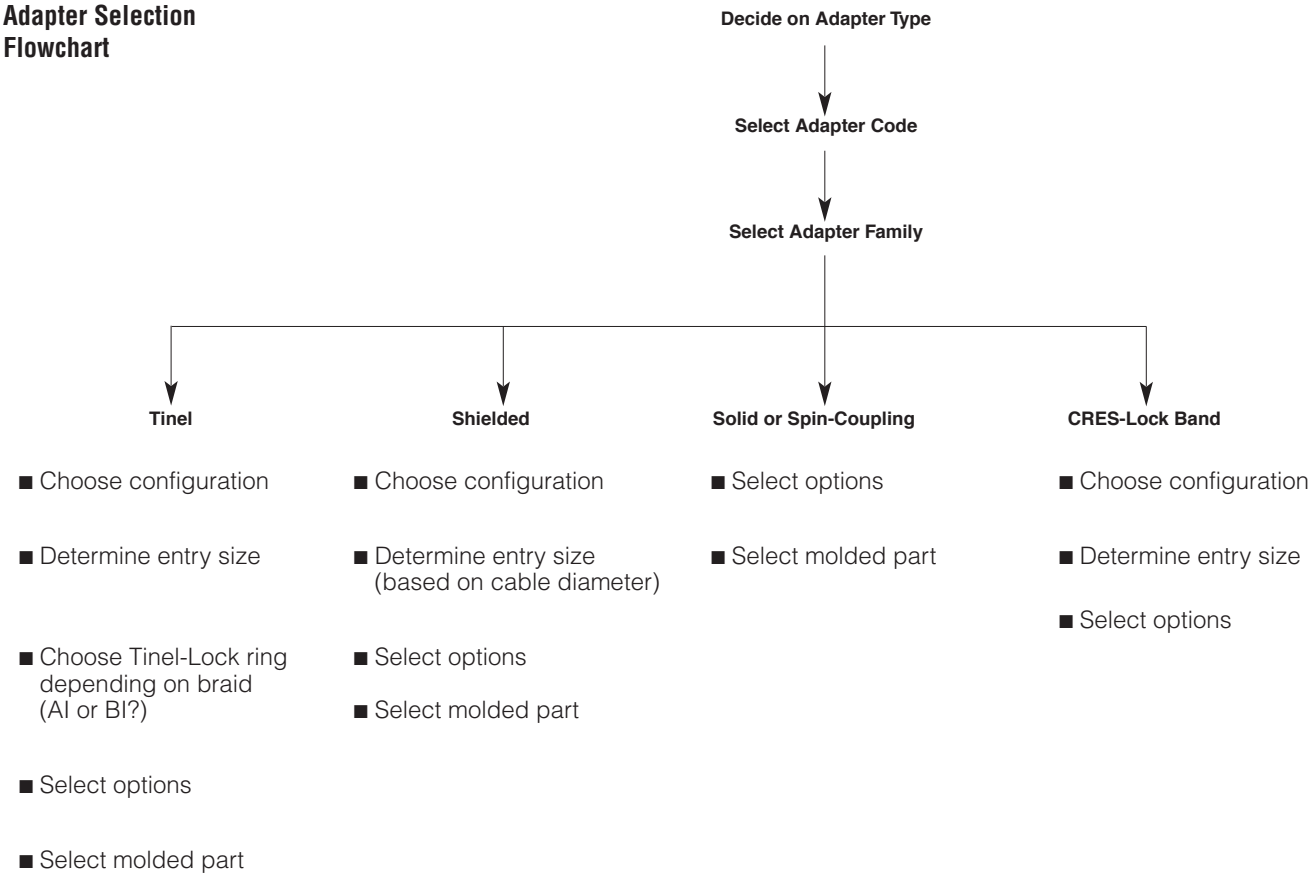

Catalog 1654025
Revised 3-13

www.te.com

Dimensions are shown for reference purposes only. Specifications subject to change.

Dimensions are in millimeters unless otherwise specified.

USA: +1 800 522 6752
Asia Pacific: +86 0 400 820 6015
UK: +44 800 267 666

For additional support numbers please visit www.te.com

Adapter Code

Table A. Adapter Code by Military Part Number

Selecting the Adapter Code

Tables A, B, and C that follow provide adapter codes for typical connectors.

If you know the military part number for the connector, you can obtain the adapter code from Table A that begins on this page.

If you know the manufacturer's prefix for the connector, you can obtain the adapter code from Table B that begins on page 6-10.

If you know the connector specification, you can obtain the adapter code from Table C on page 6-15

Military Part No.	Connector Specification	Series/Class	Adapter Code
D38999/20	MIL-C-38999	Series III: Class C, F, K, W	40
D38999/24	MIL-C-38999	Series III: Class C, F, K, W	40
D38999/26	MIL-C-38999	Series III: Class C, F, K, W	40
D38999/40	MIL-C-38999	Series IV: Class C, F, W	40
D38999/42	MIL-C-38999	Series IV: Class C, F, W	40
D38999/44	MIL-C-38999	Series IV: Class C, F, W	Contact TE
D38999/46	MIL-C-38999	Series IV: Class F, W	40
D38999/47	MIL-C-38999	Series IV: Class C, W	40
M28840/10	MIL-C-28840	Class D, DS	30
M28840/11	MIL-C-28840	Class D, DS	30
M28840/14	MIL-C-28840	Class D, DS	30
M28840/16	MIL-C-28840	Class D, DS	30
M81511/01	MIL-C-81511	Series 2: Class A, E, F	61
M81511/03	MIL-C-81511	Series 2: Class A, E, F	61
M81511/05	MIL-C-81511	Series 2: Class A, E, F	61
M81511/06	MIL-C-81511	Series 2: Class A, E, F	61
M81511/21	MIL-C-81511	Series 1: Class A, E, F	61
M81511/23	MIL-C-81511	Series 1: Class A, E, F	61
M81511/25	MIL-C-81511	Series 1: Class A, E, F	61
M81511/26	MIL-C-81511	Series 1: Class A, E, F	61
M81511/31	MIL-C-81511	Series 2: Class C, P, T	61
M81511/32	MIL-C-81511	Series 2: Class C, P, T	61
M81511/33	MIL-C-81511	Series 2: Class C, P, T	61
M81511/34	MIL-C-81511	Series 2: Class C, P, T	61
M81511/35	MIL-C-81511	Series 1: Class C, P, T	61
M81511/36	MIL-C-81511	Series 1: Class C, P, T	61
M81511/37	MIL-C-81511	Series 1: Class C, P, T	61
M81511/38	MIL-C-81511	Series 1: Class C, P, T	61
M81511/41	MIL-C-81511	Series 3: Class A, E, F	61
M81511/45	MIL-C-81511	Series 3: Class A, E, F	61
M81511/46	MIL-C-81511	Series 3: Class A, E, F	61
M81511/49	MIL-C-81511	Series 3: Class A, E, F	61
M81511/51	MIL-C-81511	Series 4: Class A, E, F	61
M81511/53	MIL-C-81511	Series 4: Class A, E, F	61
M81511/55	MIL-C-81511	Series 4: Class A, E, F	61
M81511/56	MIL-C-81511	Series 4: Class A, E, F	61
M83723/01	MIL-C-83723	Series I: Class A, G, R	54
M83723/02	MIL-C-83723	Series I: Class A, G, R	54
M83723/03	MIL-C-83723	Series I: Class A, G, R	54
M83723/04	MIL-C-83723	Series I: Class A, G, R	54
M83723/05	MIL-C-83723	Series I: Class A, G, R	54
M83723/06	MIL-C-83723	Series I: Class A, G, R	54
M83723/07	MIL-C-83723	Series I: Class A, G, R	54
M83723/08	MIL-C-83723	Series I: Class A, G, R	54
M83723/13	MIL-C-83723	Series I: Class A, G, R	54
M83723/14	MIL-C-83723	Series I: Class A, G, R	54
M83723/17	MIL-C-83723	Series II: Class A, G, R	19
M83723/18	MIL-C-83723	Series II: Class A, G, R	19
M83723/19	MIL-C-83723	Series II: Class A, G, R	19
M83723/20	MIL-C-83723	Series II: Class A, G, R	19
M83723/23	MIL-C-83723	Series II: Class A, G, R	19
M83723/24	MIL-C-83723	Series II: Class A, G, R	19
M83723/27	MIL-C-83723	Series II, Class A, G, R	19
M83723/36	MIL-C-83723	Series I: Class A, G, R	54
M83723/37	MIL-C-83723	Series I: Class A, G, R	54
M83723/38	MIL-C-83723	Series I: Class A, G, R	54
M83723/39	MIL-C-83723	Series I: Class A, G, R	54
M83723/40	MIL-C-83723	Series I: Class A, G, R	54
M83723/41	MIL-C-83723	Series I: Class A, G, R	54
M83723/42	MIL-C-83723	Series I: Class G, R	54
M83723/43	MIL-C-83723	Series I: Class G, R	54

Adapter Code (Continued)

Table A. Adapter Code by Military Part Number
(Continued)

Military Part No.	Connector Specification	Series/Class	Adapter Code
M83723/48	MIL-C-83723	Series I: Class G, R	54
M83723/49	MIL-C-83723	Series I: Class G, R	54
M83723/52	MIL-C-83723	Series II: Class K	19
M83723/53	MIL-C-83723	Series II: Class K	19
M83723/65	MIL-C-83723	Series III: Class H	54
M83723/66	MIL-C-83723	Series III: Class A, G, R	54
M83723/67	MIL-C-83723	Series III: Class A, G, R	54
M83723/68	MIL-C-83723	Series III: Class A, G, R	54
M83723/69	MIL-C-83723	Series III: Class A, G, R	54
M83723/71	MIL-C-83723	Series III: Class A, G, R	54
M83723/72	MIL-C-83723	Series III: Class A, G, R	54
M83723/73	MIL-C-83723	Series III: Class A, G, R	54
M83723/74	MIL-C-83723	Series III: Class A, G, R	54
M83723/75	MIL-C-83723	Series III: Class A, G, R	54
M83723/76	MIL-C-83723	Series III: Class A, G, R	54
M83723/77	MIL-C-83723	Series III: Class G, R	54
M83723/78	MIL-C-83723	Series III: Class G, R	54
M83723/82	MIL-C-83723	Series III: Class A, G, K, R, S	54
M83723/83	MIL-C-83723	Series III: Class A, G, K, R, S	54
M83723/84	MIL-C-83723	Series III: Class A, G, K, R, S	54
M83723/85	MIL-C-83723	Series III: Class A, G, K, R, S	54
M83723/86	MIL-C-83723	Series III: Class A, G, K, R	54
M83723/87	MIL-C-83723	Series III: Class A, G, K, R	54
M83723/91	MIL-C-83723	Series III: Class G, R, W	54
M83723/92	MIL-C-83723	Series III: Class G, R, W	54
M83723/95	MIL-C-83723	Series III: Class A, G, K, R	54
M83723/96	MIL-C-83723	Series III: Class A, G, K, R	54
M83723/97	MIL-C-83723	Series III: Class S	54
M83723/98	MIL-C-83723	Series III: Class S	54
MS17343	MIL-C-22992	Class C, J, R	32
MS17344	MIL-C-22992	Class C, J, R	32
MS17345	MIL-C-22992	Class C, J, R	32
MS17346	MIL-C-22992	Class C, R	32
MS17347	MIL-C-22992	Class C, J, R	32
MS17348	MIL-C-22992	Class C, R	32
MS24264	MIL-C-26500 (AL)	Class F, G, R Type B&T aluminum shell	51
MS24264	MIL-C-26500 (SST)	Class E Type B&T stainless steel shell	52
MS24265	MIL-C-26500 (AL)	Class F, G, R Type B&T aluminum shell	51
MS24265	MIL-C-26500 (SST)	Class E Type B&T stainless steel shell	52
MS24266	MIL-C-26500 (SST)	Class E Type B&T stainless steel shell	52
MS24266	MIL-C-26500 (AL)	Class F, G, R Type B&T aluminum shell	51
MS27466	MIL-C-38999	Series I: Class E, P, T	41
MS27467	MIL-C-38999	Series I: Class E, P, T	41
MS27468	MIL-C-38999	Series I: Class E, P, T	41
MS27469	MIL-C-38999	Series I: Class Y	Contact TE
MS27472	MIL-C-38999	Series II: Class T	41
MS27473	MIL-C-38999	Series II: Class E, P, T	41
MS27474	MIL-C-38999	Series II: Class T	41
MS27475	MIL-C-38999	Series II: Class Y	Contact TE
MS27479	MIL-C-38999	Series II: Class T	41
MS27480	MIL-C-38999	Series II: Class E, T	41
MS27481	MIL-C-38999	Series II: Class T	41
MS27482	MIL-C-38999	Series II: Class Y	Contact TE
MS27484	MIL-C-38999	Series II: Class E, T	41
MS27497	MIL-C-38999	Series II: Class T	41

Dimensions are shown for reference purposes only. Specifications subject to change.

Dimensions are in millimeters unless otherwise specified.

USA: +1 800 522 6752
Asia Pacific: +86 0 400 820 6015
UK: +44 800 267 666

For additional support numbers please visit www.te.com

Adapter Code (Continued)

Table A. Adapter Code by Military Part Number
(Continued)

Military Part No.	Connector Specification	Series/Class	Adapter Code
MS27515	MIL-C-38999	Series I: Class E	Contact TE
MS27613	MIL-C-26500 (SST)	Class K Type B&T stainless steel shell	52
MS27614	MIL-C-26500 (SST)	Class K Type B&T stainless steel shell	52
MS27615	MIL-C-26500 (SST)	Class K Type B&T stainless steel shell	52
MS27652	MIL-C-38999	Series I: Class E, T	41
MS27653	MIL-C-38999	Series I: Class E, T	41
MS27654	MIL-C-38999	Series I: Class E, T	Contact TE
MS27656	MIL-C-38999	Series I: Class E, T	41
MS27661	MIL-C-38999	Series I	41
MS27665	MIL-C-38999	Series I	41
MS3100	MIL-C-5015	Class A, E, F, R less endbell; solder contact	18
MS3101	MIL-C-5015	Class A, E, F, R less endbell; solder contact	18
MS3106	MIL-C-5015	Class A, E, F, R less endbell; solder contact	18
MS3107	MIL-C-5015	Class A, E, F, R less endbell; solder contact	18
MS3108	MIL-C-5015	Solder contact with endbell	15
MS3110	MIL-C-26482	Series 1: Class E, F, J, P	21
MS3111	MIL-C-26482	Series 1: Class E, F, J, P	21
MS3114	MIL-C-26482	Series 1: Class E, F, P	24[1]
MS3116	MIL-C-26482	Series 1: Class E, F, J, P	21
MS3120	MIL-C-26482	Series 1: Class E, F, J, P	21
MS3121	MIL-C-26482	Series 1: Class E, F, J, P	21
MS3124	MIL-C-26482	Series 1: Class E, F, P	24[1]
MS3126	MIL-C-26482	Series 1: Class E, F, J, P	21
MS3128	MIL-C-26482	Series 1: Class E, F, J, P	21
MS3130	MIL-C-81703	Series 1: Class E, P, J	71
MS3132	MIL-C-81703	Series 1: Class E	71
MS3134	MIL-C-81703	Series 1: Class E, P, J	71
MS3137	MIL-C-81703	Series 1: Class E, P, J	71
MS3138	MIL-C-81703	Series 1: Class E, P, J	71
MS3140	MIL-C-81703	Series 1: Class E, J	71
MS3144	MIL-C-81703	Series 1: Class E, J	71
MS3147	MIL-C-81703	Series 1: Class E, J	71
MS3148	MIL-C-81703	Series 1: Class E, J	71
MS3400	MIL-C-5015	Class D, L, U, W crimp contact	54
MS3401	MIL-C-5015	Class D, L, U, W crimp contact	54
MS3404	MIL-C-5015	Class D, L, U, W crimp contact	54
MS3406	MIL-C-5015	Class D, L, U, W crimp contact	54
MS3408	MIL-C-5015	Class D, L, U, W crimp contact	54
MS3409	MIL-C-5015	Crimp contact	54
MS3412	MIL-C-5015	Class D, L, U, W crimp contact less endbell	54
MS3424	MIL-C-81703	Series 3: Class E, L	54
MS3445	MIL-C-81703	Series 2: Class E	71
MS3446	MIL-C-81703	Series 3: Class E, L	54
MS3450	MIL-C-5015	Class D, L, U, W crimp contact	54
MS3451	MIL-C-5015	Class D, L, U, W crimp contact	54
MS3454	MIL-C-5015	Class D, L, U, W crimp contact	54
MS3456	MIL-C-5015	Class D, L, U, W crimp contact	54
MS3459	MIL-C-5015	Class L, W crimp contact	54
MS3464	MIL-C-81703	Series 3: Class E, L	54
MS3467	MIL-C-81703	Series 3: Class E, L	54
MS3468	MIL-C-81703	Series 3: Class E, L	54
MS3470	MIL-C-26482	Series 2: Class A, L	54
MS3471	MIL-C-26482	Series 2: Class A, L	54
MS3472	MIL-C-26482	Series 2: Class A, L	54
MS3474	MIL-C-26482	Series 2: Class A, L	54
MS3475	MIL-C-26482	Series 2: Class A, L	54
MS3476	MIL-C-26482	Series 2: Class A, L	54
NAS1599	MIL-C-81703	Series 3:	54
NAS1641	MIL-C-81703	Series 3:	54
NAS1642	MIL-C-81703	Series 3:	54

[1]Code 24 connectors have an internal accessory thread.

Dimensions are shown for reference purposes only. Specifications subject to change.

Dimensions are in millimeters unless otherwise specified.

USA: +1 800 522 6752
Asia Pacific: +86 0 400 820 6015
UK: +44 800 267 666

For additional support numbers please visit www.te.com

Adapter Code (Continued)

Table A. Adapter Code by Military Part Number
(Continued)

Military Part No.	Connector Specification	Series/Class	Adapter Code
NAS1643	MIL-C-81703	Series 3:	54
NAS1650	MIL-C-81703	Series 3:	54
NAS1651	MIL-C-81703	Series 3:	54
NAS1652	MIL-C-81703	Series 3:	54
NAS1653	MIL-C-81703	Series 3:	54
NAS1692	MIL-C-81703	Series 3:	54
NAS1693	MIL-C-81703	Series 3:	54
NAS1694	MIL-C-81703	Series 3:	54
NAS1699	MIL-C-81703	Series 3:	54
NAS1700	MIL-C-81703	Series 3:	54
NAS1701	MIL-C-81703	Series 3:	54
NAS1702	MIL-C-81703	Series 3:	54

Catalog 1654025
Revised 3-13

www.te.com

Dimensions are shown for reference purposes only. Specifications subject to change.

Dimensions are in millimeters unless otherwise specified.

USA: +1 800 522 6752
Asia Pacific: +86 0 400 820 6015
UK: +44 800 267 666

For additional support numbers please visit www.te.com

Adapter Code (Continued)

Table B. Adapter Code by Manufacturer's Prefix

Manufacturer's Prefix	Manufacturer[6]	Connector Specification	Series/Class	Adapter Code
10-214	Bendix	MIL-C-5015	MS3100 Class A, E, R	18
10-475	Bendix	40M38277	—	41
10-720	Bendix	MIL-C-5015	MS3100 Class A, E, R	18
118	Amphenol	MIL-C-26482	Series 2	54
149	Deutsch	MIL-C-81703	Series 1	71
162GB	Amphenol	MIL-C-26482	Series 1	76, 77[4]
164GB	Amphenol	BS9522 F0023	—	Contact TE
165	Amphenol	None	—	Contact TE
172	Amphenol	MIL-C-5015	—	Contact TE
179	Amphenol	MIL-C-5015	—	Contact TE
182	Amphenol	None	—	Contact TE
246	Amphenol	MIL-C-5015	MS3100 Class E, F, R	18
251	Cannon	MIL-C-26482	Series 1	21
2PPN	Plessey	MIL-C-26482	Series 1	21
2PPN-07	Plessey	MIL-C-26482	Series 1	24[3]
2PSN	Plessey	BS9522 F0017	Patt 105	76, 77[4]
2PSN-07	Plessey	MIL-C-26482	Series 1	24[3]
348	Amphenol	MIL-C-81511	Series 1 and 2	61
381	Deutsch	40M39569	—	54
418	Amphenol	MIL-C-38999	Series I and II	41
45/PT	Socapex	MIL-C-26482	Series 1	21
450	Deutsch	MIL-C-26482	Series 1	21
451	Socapex	PRL 54125	—	21 or 24[3]
460	Deutsch	MIL-C-26482	Series 1	21
48	Amphenol	MIL-C-26500	Alum Class F, G, R	51
486	Amphenol	MIL-C-26482	Series 2	54
518	Amphenol	MIL-C-83723	Series III	54
5MS	FKI[2]	Def. Stan. 59-35	Patt 121A	75
602	Amphenol	Def. Stan. 59-56	Patt 602	54
602GB	Amphenol	Def. Stan. 59-56	Patt 602	54
62AB-14	Amphenol	MIL-C-26482	Series 1	Contact TE
62GB	Amphenol	Def. Stan. 59-35	Patt 105	76, 77[4]
650	Schaltbau	VG 95329	—	61
652	Amphenol	LN 29504	—	54
652	UMD	PRL 54125	—	21 or 24[3]
674	Schaltbau	VG 95328	—	Contact TE
675	Schaltbau	VG 95328	—	Contact TE
679	Schaltbau	VG 95329	—	61
69	Amphenol	MIL-C-5015	MS3100 Class E, F, R	18
71	Bendix	MIL-C-5015	MS3100 Class A, E, R	18
711	Amphenol	BS9522 F0042	—	54
801	Amphenol	None	—	54
837	Deutsch	MIL-C-83723	Series III	54
83723	Souriau	MIL-C-83723	Series III	54
83730	Deutsch	MIL-C-83723	Series III	54
845	Souriau	NFL 54120	—	Contact TE
847	Souriau	NFL 54120	—	Contact TE
850	Souriau	MIL-C-26482	Series 1	21
851	Souriau	MIL-C-26482	Series 1	21
8520	Souriau	MIL-C-26482	Series 2	54
8525	Souriau	NAS 1599	—	54
8526	Souriau	PAN 6432-1	—	54
853	Souriau	MIL-C-83723	Series III	54
857	Souriau	LN 29728	—	54
89	Souriau	NFL 54140	—	54

[2]FKI was previously Thorn.
[3]Code 24 connectors have an internal accessory thread.
[4]Code 77 braided version.

Catalog 1654025
Revised 3-13

www.te.com

Dimensions are shown for reference purposes only. Specifications subject to change.

Dimensions are in millimeters unless otherwise specified.

USA: +1 800 522 6752
Asia Pacific: +86 0 400 820 6015
UK: +44 800 267 666

For additional support numbers please visit www.te.com

Adapter Code (Continued)

Table B. Adapter Code by Manufacturer's Prefix
(Continued)

Manufacturer's Prefix	Manufacturer[6]	Connector Specification	Series/Class	Adapter Code
891	Souriau	MIL-C-5015	Class K	Contact TE
892	Souriau	MIL-C-5015	Class K	Contact TE
8LT	Souriau	MIL-C-38999	Series I	41
8ST	Souriau	VG 96912	Series 1	47
8T	Souriau	MIL-C-38999	Series II	41
9-815	Deutsch	MIL-C-81511	Series 3 and 4	61
91-483	Bendix	MIL-C-26482	Series 2	54
944	Matrix	MIL-C-5015	MS3400 Class L, U, W	54
951	Deutsch	LN 29500	—	Contact TE
97	Amphenol	MIL-C-5015	MS3100 Class A	18
981	Matrix	MIL-C-5015	MS3400	54
A815	Deutsch	MIL-C-81511	Series 3	61
AA70	Deutsch	Not known	—	71
AB05	AB Elec	Def. Stan. 59-35	Patt 105	76, 77[4]
AB06	AB Elec	Def. Stan. 59-35	Patt 105	76, 77[4]
ABB	AB Elec	BS9522 F0032	—	78
ABJ	AB Elec	MIL-C-38999	Series I and II	41
ADS	Deutsch	MIL-C-81703	—	71
AFD	Deutsch	MIL-C-83723	Series I	54
AFD5	Deutsch	MIL-C-26482	Series 2	54
B815	Deutsch	MIL-C-81511	Series 4	61
BE	Pyle	MIL-C-83723	Series III	54
BG	Bendix	MIL-C-26482	Series I	21
BL	G&H Tech	MIL-C-38999	Series IV	40
BL	TRW	MIL-C-38999	Series IV	40
BT	Burndy	MIL-C-26482	Series 1	21
BT	Pyle	MIL-C-83723	Series III	54
BTK	Deutsch	MIL-C-26482	Series 1	21
BY1	Pyle	MIL-C-83723	Series III	54
C48	TRW	MIL-C-26500	Aluminum	51
CA (Bayonet)	Cannon	VG 95234	—	58
CA3101	Cannon	MIL-C-5015	MS3100 class E, F, R	18
CA3101	Cannon	MIL-C-5015	MS3100 Class A	18
CA3101KE	Cannon	MIL-C-5015	Class K	Contact TE
CA3106	Cannon	MS3106A	—	58
CIR	VEAM	VG 95234	—	64***, 66**, 78*
CN0930	TRW	MIL-C-83723	Series III	54
CT	Burndy	MIL-C-38999	Series II	41
CT	Plessey	MIL-C-38999	Series II	41
CV-R	Cannon	MIL-C-83723	Series II	19
CV34	Cannon	MIL-C-5015	MS3400 Class L, U, W	54
CVA	Cannon	MIL-C-83723	Series II	19
CWL	Cannon	None	—	31
CWLD	Cannon	MIL-C-22992	Class C, J, R	32
D817	Deutsch	MIL-C-81703	Series 3	54
DA	Deutsch	None	—	71
DBAD	Deutsch	MIL-C-81703	—	Contact TE
DBAS	Deutsch	MIL-C-81703	Series 3	54
DD	Deutsch	MIL-C-81703	Series 2	71
DFE	Deutsch	MIL-C-26482	Series 2	54
DKM	Deutsch	VG 95328	—	Contact TE
DL	Deutsch	MIL-C-83723	Series III	54
DM	Deutsch	MIL-C-81703	Series 1	71
DPX	Cannon		—	Contact TE
DS	Deutsch	None	—	71
DTS	Deutsch	MIL-C-38999	Series III	40

* AB connectors only
** VEAM standard
***VEAM panel mount
[4]Code 77 braided version.

Dimensions are shown for reference purposes only. Specifications subject to change.

Dimensions are in millimeters unless otherwise specified.

USA: +1 800 522 6752
Asia Pacific: +86 0 400 820 6015
UK: +44 800 267 666

For additional support numbers please visit www.te.com

Adapter Code (Continued)

Table B. Adapter Code by Manufacturer's Prefix
(Continued)

Manufacturer's Prefix	Manufacturer[6]	Connector Specification	Series/Class	Adapter Code
EA	Pyle	None	—	54
EB	Pyle	NAS 1599	—	54
EEG	Pyle	MIL-C-83723	Series I	54
ES	Pyle	None	—	54
ESC004	Various	MIL-C-5015	Class K	Contact TE
ET	Pyle	NAS 1599	—	54
FC	Flight	MIL-C-5015	Rev E only	Contact TE
FDBA	Deutsch	LN 29504	—	54
FF	Flight	MIL-C-5015	MS3400 Class D, L, U, W	54
FH	Flight	MIL-C-83723	Series III	54
FPK	Pyle	MIL-C-26500	Class K	52
FP5K	Pyle	MIL-C-26500	Class K	Contact TE
FYL	Pyle	MIL-C-26500	Class K	52
G	Burndy	None	—	21
GC-E	General	MIL-C-26482	Series 1	21
GTA	Hughes	MIL-C-28840	—	30
GTC06	Amphenol	—	—	64
HAN	Deutsch	MIL-C-5015	MS3100 Class E, KE	Contact TE
HD	SAE	MIL-C-28840	—	30
HTMAS	Cannon	MIL-C-5015	Class K	Contact TE
HTMF	Cannon	MIL-C-83723	Series III: Class K	54
HTMS	AB Elec	MVEE 695	—	75
JT	Amphenol	MIL-C-38999	Series II	41
JT	Bendix/FKI	MIL-C-38999	Series II	41
JT	Socapex	MIL-C-38999	Series II	41
JT-R	FKI[2]	PAN 6433-1	—	41
JT-R	Teldix	PAN 6433-1	—	41
KFS	Cannon	MIL-C-28840	—	30
KJ	Cannon	MIL-C-38999	Series II	41
KJA	Cannon	MIL-C-38999	Series III	40
KJJ	Cannon	MIL-C-38999	Series II	Contact TE
KJJL	Cannon	MIL-C-38999	Series I	Contact TE
KJL	Cannon	MIL-C-38999	Series I	41
KPSE	Cannon	MIL-C-26482	Series 1	21
KPT	Cannon	MIL-C-26482	Series 1	21
KV-R	Cannon	NAS 1599	—	54
L	Burndy	MIL-C-26482	Series 1	21
LJT	Bendix	MIL-C-38999	Series I	41
LJT	Socapex	MIL-C-38999	Series I	41
LL3	Deutsch	MIL-C-81511	—	61
LL5/6	Deutsch	BS9540 F0001	Patt 602	Contact TE
LMB	Litton-Veam	Def. Stan. 59-35	Patt 121A	75
LPT	Deutsch	MIL-C-26482	Series 1	21
LS	Pyle	None	—	54
LTT	FKI[2]	BS9522 F0029	Patt 616	41
M-T	Burndy	MIL-C-26482	Series 1	21
M723	Matrix	MIL-C-83723	Series II	19
MB1	Matrix	MIL-C-26482	Series 2	54
MB3	Matrix	MIL-C-83723	Series III	54
MB9	Matrix	MIL-C-38999	Series I and II	41
MD	Matrix	MIL-C-26482	Series 2	54
MDR	Deutsch	None	—	71
MF	Cannon	MIL-C-83723	Series III	54
MK12	Plessey	Def. Stan. 59-35	Patt 603	76, 77[4]
MK18	Plessey	Def. Stan. 59-35	Patt 608	79[5]
MK38	Plessey	MIL-C-38999	Series I	41

[2]FKI was previously Thorn.
[4]Code 77 braided version.
[5]Free connectors only.

Dimensions are shown for reference purposes only. Specifications subject to change.

Dimensions are in millimeters unless otherwise specified.

USA: +1 800 522 6752
Asia Pacific: +86 0 400 820 6015
UK: +44 800 267 666

For additional support numbers please visit www.te.com

Adapter Code (Continued)

Table B. Adapter Code by Manufacturer's Prefix
(Continued)

Manufacturer's Prefix	Manufacturer[6]	Connector Specification	Series/Class	Adapter Code
MK25	Plessey	MIL-C-38999	Series II	41
MK7	Plessey	DEF 5325-2	Patt 104	Contact TE
MK8	Plessey	Def. Stan. 59-35	Patt 105	76, 77[4]
ML94	Matrix	MIL-C-38999	Series IV	40
MQ3	Matrix	MIL-C-83723	Series III	54
MT3	Matrix	MIL-C-83723	Series III	54
MT93	Matrix	MIL-C-38999	Series III	40
P5	Plessey	NFL 54 125	—	76 or 24[3], 77[4]
PAT104D	AB Elec	Def. Stan. 59-35	Patt 104	Contact TE
PT	Socapex	MIL-C-26482	Series 1	76, 77[4]
PT	Teldix	MIL-C-26482	Series 1	76, 77[4]
PT-CE	Bendix	None	—	22
PT-G	Teldix	VG 95328	—	Contact TE
PT-SE	Socapex	MIL-C-26482	Series 1	76, 77[4]
PT-SE	Teldix	MIL-C-26482	Series 1	76, 77[4]
PT07	Bendix	MIL-C-26482	Series 1	24[3]
PT07SE	FKI[2]	MIL-C-26482	Series 1	24[3]
PT33	FKI[2]	BS9522 F0017	Patt 105	76, 77[4]
PT33SE	FKI[2]	BS9522 N0001	Patt 603	76, 77[4]
PT44	FKI[2]	BS9522 F0017	Patt 105	76, 77[4]
PT44SE	FKI[2]	BS9522 N0001	Patt 603	76, 77[4]
PT55	FKI[2]	BS9522 F0017	Patt 105	76, 77[4]
PT55SE	FKI[2]	BS9522 N0001	Patt 603	76, 77[4]
PT77	FKI[2]	BS9522 F0017	Patt 105	76, 77[4]
PT77SE	FKI[2]	BS9522 N0001	Patt 603	76, 77[4]
PTG55	FKI[2]	BS9522 F0017	Patt 105	76, 77[4]
PTG55SE	FKI[2]	BS9522 N0001	Patt 603	76, 77[4]
PTS-DR	Bendix	MIL-C-26482	Series 2	54
PV7	Cannon	MIL-C-26482	Series 2	54
PVJ	Cannon	MIL-C-26482	Series 2	54
PVW	Cannon	—	—	54
PVX	Cannon	Def. Stan. 59-56	Patt 602	54
QDP	Bendix	None	—	32
QRP	AB Elec	—	—	78
QWL	Bendix	None	—	31
QWLD	Bendix	MIL-C-22992	Class C, J, R	32
RD1	Raychem	MIS-20065	—	54
RR	Deutsch	Def. Stan. 59-56	Patt 602	54
RR20	Deutsch	PAN 6432-2	—	54
RR50	Deutsch	PAN 6432-1	—	54
RR70	Deutsch	PAN 6432-2	—	54
RSM	Deutsch	None	—	71
RTK	Deutsch	None	—	71
SA	SAE	MIL-C-5015	MS3400	54
SB	Bendix	MIL-C-5015	Class E	18
SB-104	AB Elec	Def. Stan. 59-35	Patt 104	Contact TE
SB-M4	AB Elec	Def. Stan. 59-35	Patt 104	Contact TE
SB-MS	AB	BS9522 F0030	—	75
SC	Bendix	MIL-C-5015	MS3100 Class A	18
SCB	SICEM	VG 95234	—	Contact TE
SF	Bendix	MIL-C-5015	MS3100 Class E	18
SG	Bendix	MIL-C-5015	MS3100 Class E	18
SJT	Various	PAN 6433-2	—	47
SJT07	Various	PAN 6433-2	—	Contact TE
SLPT	Deutsch	MIL-C-26482	Series 1	76, 77[4]

[2]FKI was previously Thorn.
[3]Code 24 connectors have an internal accessory thread.
[4]Code 77 braided version.

Dimensions are shown for reference purposes only. Specifications subject to change.

Dimensions are in millimeters unless otherwise specified.

USA: +1 800 522 6752
Asia Pacific: +86 0 400 820 6015
UK: +44 800 267 666

For additional support numbers please visit www.te.com

Adapter Code (Continued)

Table B. Adapter Code by Manufacturer's Prefix
(Continued)

Manufacturer's Prefix	Manufacturer[6]	Connector Specification	Series/Class	Adapter Code
SM	Bendix	MIL-C-5015	MS3100 Class A, E, R	18
SPT	Bendix	MIL-C-26482	Series 1	76, 77[4]
SPT	Socapex	MIL-C-26482	Series 1	76, 77[4]
SPT07	Various	MIL-C-26482	Series 1	24[3]
STK	Deutsch	None	—	71
STT	FKI[2]	BS9522 F0012	Patt 615	47
STT07	FKI[2]	BS9522 F0012	Patt 615	Contact TE
T3[1]	Pyle	MIL-C-38999	Series III	40
TRIM TRIO	Burndy	None	—	Contact TE
TT	FKI[2]	BS9522 N0003	Patt 614	41
TV	FKI[2]/Bendix	MIL-C-38999	Series III	40
TV-O-R	Bendix	MIL-C-38999	Series III and IV	40
TVP	FKI[2]/Bendix	MIL-C-38999	Series III	40
TVPS	FKI[2]/Bendix	MIL-C-38999	Series III	Contact TE
TVS	FKI[2]/Bendix	MIL-C-38999	Series III	Contact TE
Tri-Start	Bendix	MIL-C-38999	Series III and IV	40
VPT	VEAM	MIL-C-26482	Series 1	21
VTT	FKI[2]	MIL-C-38999	Series III	40
ZZY/ZZW	Pyle	MIL-C-26500	Class R, G (AL)	51
ZZY/ZZW	Pyle	MIL-C-26500	Class E (SST)	52

[1]May be a number or letter depending upon connector style.
[2]FKI was previously Thorn.
[3]Code 24 connectors have an internal accessory thread.
[4]Code 77 braided version.
[5]Free connectors only.
[6]Some of the connector manufacturers names may have changed and may not exist. They are listed here to assist users who know them as listed names.

Catalog 1654025
Revised 3-13

www.te.com

Dimensions are shown for reference purposes only. Specifications subject to change.

Dimensions are in millimeters unless otherwise specified.

USA: +1 800 522 6752
Asia Pacific: +86 0 400 820 6015
UK: +44 800 267 666

For additional support numbers please visit www.te.com

Adapter Code (Continued)

Table C. Adapter Code by Connector Specification

Connector Specification	Series/Class	Adapter Code
40M38277	—	41
40M39569	—	54
BS9520	G0001	41
BS9520	G0002	41
BS9520	G0003	40
BS9522 F0012	Patt 615	47
BS9522 F0014	Patt 104	Contact TE
BS9522 F0017	Patt 105	76
BS9522 F0020	Patt 608	79[2]
BS9522 F0023	—	Contact TE
BS9522 F0029	Patt 616	41
BS9522 F0030	Patt 121A	75
BS9522 F0032	Patt 121B	78
BS9522 F0042	—	54
BS9522 N0001	Patt 603	76
BS9522 N0003	Patt 614	41
BS9540 F0001	Patt 602	54
LN 29500	—	21
LN 29504	—	54
LN 29728	—	54
LN 29729	—	47
MIL-C-22992	Class C, J, R	32
MIL-C-26482	Series 1	21, 24[1]
MIL-C-26482	Series 2	54
MIL-C-26500	Aluminum, Class F, G, R	51
MIL-C-26500	Stainless steel, Class E, K	52
MIL-C-28840	Class D	30
MIL-C-38999	Series I and II	41
MIL-C-38999	Series III and IV	40
MIL-C-5015	MS3400	54
MIL-C-5015	MS3100	18, 15 (with endbell)
MIL-C-5015	5MS	75
MIL-C-81511	Series 1, 2, 3, and 4	61
MIL-C-81703	Series 1, 2	71
MIL-C-81703	Series 3	54
MIL-C-83723	Series II	19
MIL-C-83723	Series I and III	54
MIL-C-85049/59	—	32
MIL-C-85049/60	—	54
MIL-C-85049/62	—	41
MIL-C-85049/69	—	40
MIS-20065	—	54
MVEE	5MS	75
NAS 1599	—	54
NFL 54120	—	Contact TE
NFL 54140	—	54
PAN 6432-1	—	54
PAN 6432-2	—	54
PAN 6433-1	—	41
PAN 6433-2	—	47
PRL 54125	—	21, 24[1]
VG 95234	—	64***, 66**, 78*
VG 95328	—	Contact TE
VG 95329	—	61
VG 96912	Series 2	41
VG 96912	Series 1	47

[1]Code 24 connectors have an internal accessory thread.
[2]Free connectors only.

* AB connectors only
** VEAM standard
***VEAM panel mount

Dimensions are shown for reference purposes only. Specifications subject to change.

Dimensions are in millimeters unless otherwise specified.

USA: +1 800 522 6752
Asia Pacific: +86 0 400 820 6015
UK: +44 800 267 666

For additional support numbers please visit www.te.com

Adapter Family

Selecting the Adapter Family

Using Table D below and the adapter code you selected in Table A, B, or C, select the adapter family for the adapter type you chose (spin-coupling or Tinel-Lock).

With the alphanumeric prefix for that family you can then build the part number for your TE adapter.

Table D. Identification of Adapter Family Prefix by Adapter Code

TE Connector Code	Boot Adapter		Shielded Adapter			Tinel-Lock Adapter Straight, 45°, and 90°	CRES-Lock Band Strap Adapter
	Solid (Fixed)	Spin-Coupling	Straight	45°	90°		
15	210M5	202M5	219M0	219M1	219M2	TXR 15	—
18	218M5	218M6	218M7	218M8	218M9	TXR 18	BND 18
19	201M7	201M4	—	—	—	—	—
21	203M6	203M9	206M0	206M1	206M2zx	TXR 21	BND 21
24	208M5	208M6	216M0	216M1	206M5	—	—
30	211M8	211M9	211M5	211M6	211M7	TXR 30	—
32	—	204M3	207M3	212M4	212M5	TXR 32	BND 32
40	209M3	209M4	208M7	208M8	208M9	TXR 40	BND 40
41	202M1	202M2	204M0	204M1	204M2	TXR 41	BND 41
47	202M8	202M7	210M0	210M1	210M2	TXR 47	BND 47
51	207M4	205M5	207M0	207M1	207M2	TXR 51	—
52	208M3	209M6	208M0	208M1	208M2	TXR 52	—
54	201M9	201M1	203M0	203M1	203M2	TXR 54	BND 54
61	202M3	202M4	205M0	205M1	205M2	TXR 61	—
71	203M5	202M9	217M0	217M1	217M2	TXR 71	—
75	228M5	228M7	227M0	227M1	227M2	TXR 75	—
76	225M6	225M5	—	—	—	TXR 76	—
77	228M6	228M8	228M0	228M1	228M2	—	—
78	225M4	225M3	225M0	225M1	225M2	TXR 78	—
79	—	229M3	229M1	229M2	229M0	TXR 79	—
80	215M4	213M5	213M6	213M7	213M8	TXR 80	—
81	214M3	214M4	214M5	214M6	214M7	TXR 81	—

Dimensions are shown for reference purposes only. Specifications subject to change.

Dimensions are in millimeters unless otherwise specified.

USA: +1 800 522 6752
Asia Pacific: +86 0 400 820 6015
UK: +44 800 267 666

For additional support numbers please visit www.te.com

Part Number

Having Selected the Right Adapter Type and Adapter Family, You Can Now Construct a Part Number for the Adapter.

1. Start with the alphanumeric prefix you selected in Table D. This will be the basis of your part number.
2. Add to the prefix the codes and designators required for your adapter type and application. These may include several or all of the following:
   - Order number
   - Manufacturer's prefix
   - Material
   - Finish
   - Entry size
   - Ring designator
   - Option codes

Using the right codes and designators helps ensure that the adapter you select will meet the application requirements.

To determine which codes and designators you will need, use the Part numbering system shown below. To select the right codes and designators, turn to the pages that follow.

Part Numbering System

201M1 16 - 19 B

Spin-Coupling or Solid Adapter

Adapter family
Order number
Manufacturer's prefix (connector code 18 only)
Material
Finish
Options*

*For full range of options, consult TE.

203M0 16 - 19 B 10

Shielded Adapter

Adapter family
Order number
Manufacturer's prefix (connector code 18 only)
Material
Finish
Entry size
Options*

- Standard braid length (6") requires no modification code.
- Nonstandard braid length is stated in inches (12 = 12" length)

*For full range of options, consult TE.

TXR54 A B 00 - 16 10 AI

Tinel-Lock Adapter

Adapter family
Material (A - aluminium alloy; S = stainless steel)
Finish
Angle (00 = straight; 45 = 45˚; 90 = 90˚)
Manufacturer's prefix (connector code 18 only)
Order number
Entry size
Ring designator
Options*

*For full range of options, consult TE.

Catalog 1654025
Revised 3-13

www.te.com

Dimensions are shown for reference purposes only. Specifications subject to change.

Dimensions are in millimeters unless otherwise specified.

USA: +1 800 522 6752
Asia Pacific: +86 0 400 820 6015
UK: +44 800 267 666

For additional support numbers please visit www.te.com

Part Number (Continued)

CRES-Lock Band Strap Adapters Part Numbering System

BND 54 A B 00 - 12 06 A

Product Designator
BND — Adapter and Band
BNX — Adapter only

Adapter Code

Material[2]
A — Aluminum alloy per QQ-A-225
B — Nickel aluminum bronze per ASTM B150
S — Stainless steel per QQ-S-763

Finish (See S-CH00-0157-002)

Configuration
00 = Straight 45 = 45° 90 = 90°
4W = 45° 9W = 90°

For BND 18, dash may be replaced by a letter

Order Number

Entry Size[3]

Band Termination Device Code[1]
A — BND-1225S (Standard Supply for Americas and Asia)
CRES-Lock Banding Strap
B — BND-1425S (Standard Supply European Countries)

Notes:
1. See Drawings BND-1225S or BND-XX25S for information on bands. Adapter dimensions for "A" designation may be different than those listed in this catalog. Contact Tyco Electronics for Specification Control Drawing (SCD) for these adapters.
2. Alternative equivalent material specifications to those shown may be supplied at Tyco Electronics' discretion.
3. For standard entry sizes see relevant specification control drawing. For entry sizes larger than standard (Type II Adapters), see sheets 3 and 4.

Band Strap Adapter Modification Option Field (Omit if not required)

BND54AB00-1206A D F H J L N P S

D — Drain holes modification

F — Internal abrasion resistant coating

H — Helical conduit thread

J — Chain attachment assembly

L — Lock wire holes manufacturer's option
Include mod if required
Standard on codes 40 and 54

Optional O-Ring material
Omit for standard silicone (ZZ-R-765, grade 70: S59)
C — Neoprene per AMS3209
U — Fluorosilicone per MIL-R-25988, class 1
N — Nitrile (Buna N) per AMS3215
V — Fluorocarbon per MIL-R-83248, class 1

P — Pre-coiled bandstrap option
(See drawings BND-1225P or BND-XX25P)

S — Self-locking spin nut

Dimensions are shown for reference purposes only. Specifications subject to change.

Dimensions are in millimeters unless otherwise specified.

USA: +1 800 522 6752
Asia Pacific: +86 0 400 820 6015
UK: +44 800 267 666

For additional support numbers please visit www.te.com

Material and Finish

Selecting the Material and Finish

To ensure optimum compatibility, select the adapter material and finish to match those of the connector.

Most circular connectors are manufactured from aluminum with a cadmium finish.

Material Codes

Material* Description	Material Code Solid, Spin-Coupling, and Shielded Adapters	Tinel-Lock Adapters	Typical Applications
Aluminum alloy	19	A	Standard material for normal applications
Stainless steel	62	S	Corrosion-resistant and high-temperature (firewall) applications
Nickel aluminum bronze	01	B	Exposed marine environments

*Other materials available upon request.

Finish Codes

Finish* Description	Color	Finish Code	Typical Applications
Cadmium, per QQ-P-416, Type II, Class 3 over electroless nickel (500-hour salt-spray–resistant finish)	Olive drab	B	Corrosion resistance for exposed environments
Electroless nickel, per AMS-C-26074, Class 4, Grade B	Bright Silver	C	High conductivity for optimum screening performance
Anodized, hard, per MIL-A-8625, Type III, Class 2	Black	G	Nonconductive finish for aluminum adapters
Passivated, per QQ-P-35 or MIL-S-5002	—	J	Surface treatment for corrosion-resistant steel
Unplated, shotblast	—	W	Nonreflective finish for nickel aluminum bronze adapters
Zinc Nickel	Black	Z	Cadmium free plating

*Other finishes available upon request.

Catalog 1654025
Revised 3-13

www.te.com

Dimensions are shown for reference purposes only. Specifications subject to change.

Dimensions are in millimeters unless otherwise specified.

USA: +1 800 522 6752
Asia Pacific: +86 0 400 820 6015
UK: +44 800 267 666

For additional support numbers please visit www.te.com

Entry Size

Determining the Wire Bundle Size

The entry size of an adapter is based on the size of the wire bundle. If you don't know the size of the wire bundle, measure a prototype or calculate the size.

Calculation of the wire bundle size is based on three values:

- Cable outside diameter (COD)
- Cable jacket thickness
- Jacketed cable diameter

Instructions for calculating these values follow.

COD Calculation

To calculate the cable outside diameter, first determine whether the wires in the bundle are of the same size or of different sizes.

COD Calculation for Wires of the Same Size

For bundles with wires that are all of the same size, follow these steps:

1. Determine the number of wires in the wire bundle.
2. Find the multiplication factor for that number in Table E shown on the next page.
3. Find the wire diameter in the Wire and Cable section (Section 9) of this catalog.
4. Multiply the wire diameter (from Step 3) by the multiplication factor (from Step 2) as shown below.

Formula: D = Fd

Where:
D = Bundle diameter

F = Multiplication factor

d = Wire diameter

Example: A bundle of wires containing 27 x 44A0111-22

F = 6.00 (the multiplication factor for 27 wires from Table E)

d = 1.19 mm (.049 in)*

D = 6 x 1.19 mm (6 x .049 in)

D = 7.14 mm (.294 in)

*Diameter of 44A0111-22 wire obtained from the Wire and Cable Section 9 of this catalog.

COD Calculation for Wires of Different Sizes

To determine the wire bundle diameter when using wires of different sizes, follow these steps:

1. Determine the number of wires in the wire bundle.
2. Find the diameter of the wires in the Wire and Cable section of this catalog.
3. Calculate the cable outside diameter by using this formula:

$$D = 1.2\sqrt{N1d12 + N2d\ 22 + N3d32}$$

Where:
D = Bundle diameter

N = Number of wires

d = Diameter of wires

Example: A bundle of wires containing

3 x 44A0111-221* (1.192-mm dia.)

5 x 44A0111-201* (1.42-mm dia.)

1 x 44A0111-181* (1.65-mm dia.)

$$D = 1.2\sqrt{3 \times 1.192^2 + 5 \times 1.42^2 + 1 \times 1.65^2}$$
$$D = 1.2\sqrt{3 \times 1.4 + 5 \times 2.02 + 1 \times 2.7}$$
$$D = 1.2\sqrt{4.2 + 10.1 + 2.7}$$
$$D = 1.2\sqrt{17}$$
$$D = 1.2 \times 4.12$$
$$D = 4.95\ \text{mm}$$

*For wire information see the Wire and Cable Section 9 of this catalog.

Catalog 1654025
Revised 3-13

www.te.com

Dimensions are shown for reference purposes only. Specifications subject to change.

Dimensions are in millimeters unless otherwise specified.

USA: +1 800 522 6752
Asia Pacific: +86 0 400 820 6015
UK: +44 800 267 666

For additional support numbers please visit www.te.com

Entry Size (Continued)

Table E. Multiplication Factors for Wire Bundles with Equal Size Wires

This table provides multiplication factors for wire bundles of 1 to 61 wires.

To determine the approximate diameter of a wire bundle when the wires are all the same size, find the factor for the number of wires in the bundle and multiply the wire diameter by that factor.

Number of Wires	Multiplication Factor	Number of Wires	Multiplication Factor
1	1.00	32	6.70
2	1.60	33	6.70
3	2.00	34	7.00
4	2.41	35	7.00
5	2.70	36	7.00
6	3.00	37	7.00
7	3.00	38	7.31
8	3.60	39	7.31
9	4.00	40	7.31
10	4.00	41	7.61
11	4.00	42	7.61
12	4.00	43	7.61
13	4.41	44	7.61
14	4.41	45	8.00
15	4.70	46	8.00
16	4.70	47	8.00
17	5.00	48	8.00
18	5.00	49	8.41
19	5.00	50	8.41
20	5.31	51	8.41
21	5.31	52	8.41
22	5.61	53	8.70
23	5.61	54	8.70
24	5.61	55	8.70
25	6.00	56	8.70
26	6.00	57	9.00
27	6.00	58	9.00
28	6.41	59	9.00
29	6.41	60	9.00
30	6.41	61	9.00
31	6.70	—	—

Catalog 1654025
Revised 3-13

www.te.com

Dimensions are shown for reference purposes only. Specifications subject to change.

Dimensions are in millimeters unless otherwise specified.

USA: +1 800 522 6752
Asia Pacific: +86 0 400 820 6015
UK: +44 800 267 666

For additional support numbers please visit www.te.com

Entry Size (Continued)

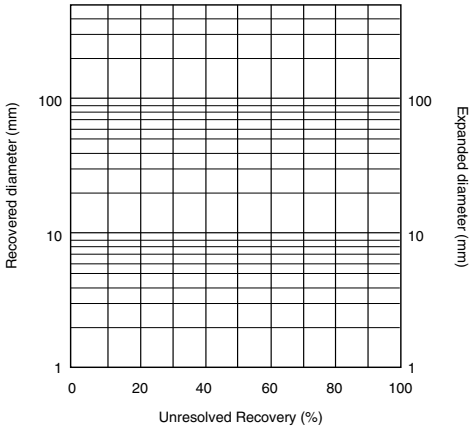

Figure 1.

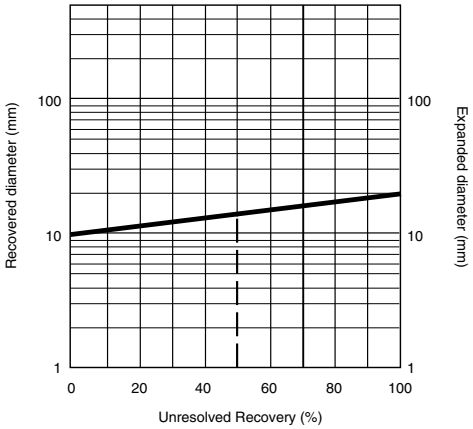

Figure 2.

Cable Jacket Thickness Calculation

To determine the wall thickness of a jacket over a wire bundle:

1. Use the chart in Figure 1 to determine the unresolved recovery of the tubing jacket
2. Use the chart in Figure 3 to determine the wall thickness reduction factor.
3. Calculate the jacket wall thickness by multiplying the fully shrunk wall thickness (as detailed in the Tubing section — Section 3 — of this catalog) by the wall thickness reduction factor.

Step 1. Determine the Unresolved Recovery of the Tubing Jacket.

1. Locate the recovered and expanded diameters of the chosen tubing size on the chart in Figure 1.
2. Lay a straight edge between the two values and pencil in a straight line connecting them.
3. Find the wire bundle diameter on the Expanded Diameter scale of the chart in Figure 1.
4. From the wire bundle diameter value, draw a straight horizontal line across the chart.
5. From the intersection of the line from step 3 and the line from step 2, read down vertically to the “Unresolved Recovery” for this combination.

Example (see Figure 2):

Recovered tubing diameter = 10 mm

Expanded tubing diameter = 20 mm

Wire bundle diameter =13 mm

Unresolved recovery = 50%

Catalog 1654025
Revised 3-13

www.te.com

Dimensions are shown for reference purposes only. Specifications subject to change.

Dimensions are in millimeters unless otherwise specified.

USA: +1 800 522 6752
Asia Pacific: +86 0 400 820 6015
UK: +44 800 267 666

For additional support numbers please visit www.te.com

Entry Size (Continued)

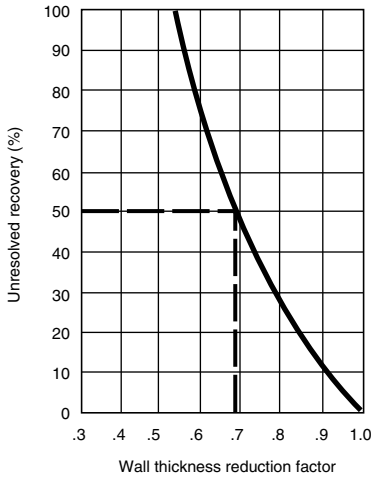

Figure 3.

Step 2. Find the Wall Thickness Reduction Factor.

1. On the Unresolved Recovery scale of the chart in Figure 3 above, find the unresolved recovery value determined in Step 1.
2. From the unresolved recovery value, draw a straight line across the chart to the curved line.
3. At the point where that line intersects the chart's curved line, read vertically down to the wall thickness reduction factor.

Example shown:

Unresolved recovery = 50%

Reduction factor = 0.68

Step 3. Calculate the Jacket Wall Thickness.

Multiply the fully shrunk wall thickness of the tubing by the reduction factor.

Example:

Fully shrunk wall thickness of tubing = 1.45 mm

Wall thickness reduction factor (from Figure 3) = 0.68

Jacket wall thickness = 1.4 x 0.68

= 0.99 mm

Note:
If the cable is to be shielded (screened), an addition must be made to the wire bundle diameter for the braid. In the example, 0.8 mm would be added to the wire bundle diameter for a single layer of RAY 101 (36 AWG) braid to make a total wire bundle diameter of 13.8 mm.

Entry Size (Continued)

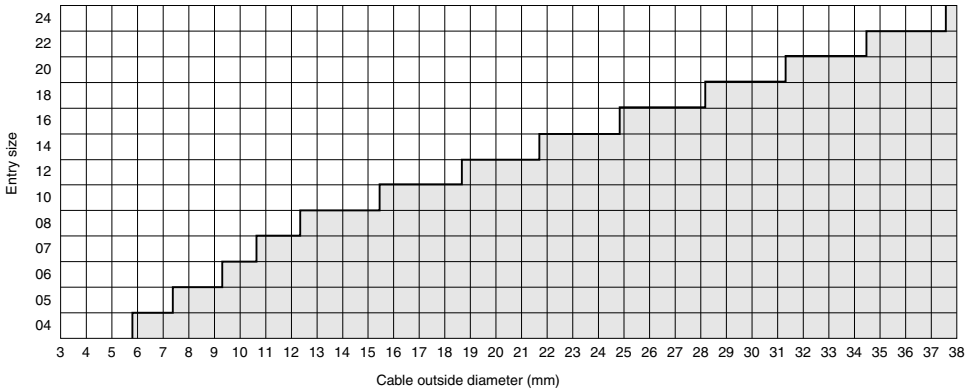

Figure 4. Entry Size by Cable Outside Diameter (in millimeters)

Determining the Entry Size

Once you have the wire bundle size, you can use the chart in Figure 4 to select the entry size. This chart shows the minimum entry sizes for cables from 3 to 38 mm [.118 to 1.496 in] in diameter. In other words, the white spaces on the chart represent all of the cable outside diameters each entry size will fit.

Follow these steps:

1. Find the cable diameter on the chart.
2. Note the lowest entry size that will fit the cable diameter

Braided Adapters

The extreme flexibility of the braid on these adapters accommodates a large range of cable diameters. It is therefore recommended that the standard entry size for any given adapter part number be specified as indicated on the relevant data sheet. Nonstandard entry sizes are available on special order.

Use the selection chart in Figure 4 to ensure that the standard entry size will pass over the jacketed cable diameter.

Tinel-Lock Adapters

With Tinel-Lock adapters, the cable braid must be opened up to fit onto the outside diameter of the adapter entry. For optimum performance, select the smallest entry size that will pass over the jacketed cable diameter. Repair of the connector will be easier using the boot and shield rollback if a slightly larger than minimum entry size is used.

The selection chart in Figure 4 shows the minimum entry sizes for cable diameters in the range of 3 mm to 38 mm. This will ensure that the jacketed cable passes through the adapter for easy assembly.

It should be checked to be sure the braid will open sufficiently to fit the entry size selected and to ensure that the braid and boot can be rolled back.

Entry Size (Continued)

Ray 101 Tinned-Copper Braid

TE manufactures a range of Raychem tubular braided shields (sometimes called “screens”) that are used for shielding hand-built harnesses.

These braids are specially designed to have:

- Good surface transfer impedance
- Large opening ratio
- Good handling characteristics
- Compatibility with Tinel-Lock adapters

Sizes are available to cover wire bundle diameters from 2.5 to 38 [.10 to 1.50]. The table below shows the wire bundle diameter range for each braid size and also shows which adapter entry sizes are compatible with each of these braids and bundle diameters.

The entry sizes do not allow for the additional thickness of the braid and the heat-shrunk cable jacket.

Ray 101 Data

Part No.	Number of Carriers	Number of Ends/ Carrier	Individual Strand Size (mm/AWG)	Wire Bundle Diameter Range			Tinel Adapter Entry Size (Single-Layer Braid)
				Min.	Max.	Wall Thickness (Nom.)	
RAY 101-3.0	16	10	0.1 [38]	2.5 [.10]	5.0 [.20]	N/A	N/A
RAY 101-4.0	24	7	0.13 [36]	3.5 [.14]	7.5 [.30]	0.4 [.02]	04*
RAY 101-6.0	24	9	0.13 [36]	4.0 [.16]	9.5 [.37]	0.4 [.02]	04, 05, 06*, 07
RAY 101-7.5	24	14	0.13 [36]	6.0 [.24]	14.0 [.55]	0.4 [.02]	05, 06, 07, 10*
RAY 101-10.0	36	12	0.13 [36]	8.0 [.31]	22.0 [.87]	0.4 [.02]	07, 08, 10 12*
RAY 101-12.5	36	15	0.13 [36]	10.0 [.39]	24.0 [.94]	0.4 [.02]	08, 10, 12,14, 16*
RAY 101-20.0	48	16	0.13 (36]	16.0 [.63]	38.0 [1.50]	0.4 [.02]	12, 14, 16, 18, 20, 22

*Combination is not preferred; use only if absolutely necessary.

Catalog 1654025
Revised 3-13

www.te.com

Dimensions are shown for reference purposes only. Specifications subject to change.

Dimensions are in millimeters unless otherwise specified.

USA: +1 800 522 6752
Asia Pacific: +86 0 400 820 6015
UK: +44 800 267 666

For additional support numbers please visit www.te.com

Tinel-Lock Ring

Tinel-Lock Ring and Braid

The Tinel-Lock ring designator must be specified according to the type of cable braid used, and is added to the part number after the adapter entry size. There are two types of ring, AI and BI, for each entry size.

Tinel rings are marked with thermochromic paint, which changes color when the correct installation temperature is reached. BI-type rings are identified with a red spot.

Braid type, material, and construction are variable. Refer to drawing CH00-0250-008 for Tinel-Lock adapters.

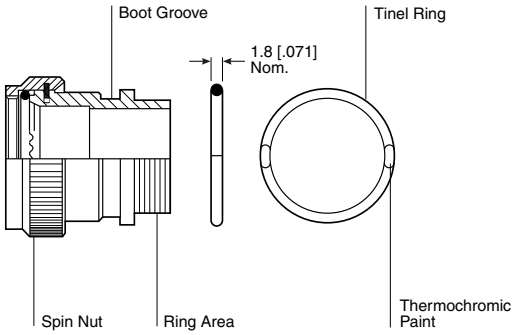

Braid Type	Ring Designator
Single layer 36 AWG	AI
Single layer 34 AWG	AI
Single layer 32 AWG	BI
Single layer 30 AWG	BI
Double layer 36 AWG	BI
Double layer 34 AWG	BI

A or B = Size of Braid I = Insulating Layer

Table F. Wire Gauge (AWG) to Diameter Cross-Reference

Use this table to establish wire gauge if not known.

Wire Gauge (AWG)	Diameter
40	0.079 [0.0031]
39	0.089 [0.0035]
38	0.102 [0.0040]
37	0.114 [0.0045]
36	0.127 [0.0050]
35	0.142 [0.0056]
34	0.160 [0.0063]
33	0.180 [0.0071]
32	0.203 [0.0080]
31	0.226 [0.0089]
30	0.254 [0.0100]
29	0.287 [0.0113]
28	0.320 [0.0126]

*Note: It may be necessary to use an 'A' rather than a 'B" ring on entry sizes 04-07 when terminating a multicore cable with double layer machined braid. Braid applied by machine provides less size flexibility than pull-on braid at the smaller entry sizes. If disturbance during assembly causes loss of braid lay, grip of the tinel ring may be affected. Evaluation is recommended. Contact TE for more information.

Available in:	Americas	Europe	Asia Pacific
	■	■	■

Dimensions are shown for reference purposes only. Specifications subject to change.

Dimensions are in millimeters unless otherwise specified.

USA: +1 800 522 6752
Asia Pacific: +86 0 400 820 6015
UK: +44 800 267 666

For additional support numbers please visit www.te.com

CRES-Lock Bands

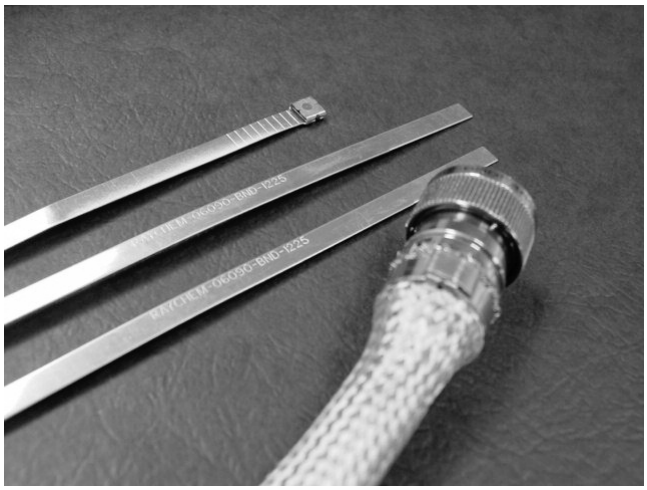

The CRES-Lock band strap designator must be specified when using a band adapter. There are two forms of band that are available — precoiled and straight. Straight is a standard configuration and does not require any notation. If precoiled bands are required, an option P must be used. Refer to CH00-0250-016 drawing for more detailed information. CRES-Lock band strap comes in 12 inch length. These fit all entry sizes for both the CRES-Lock adapter.

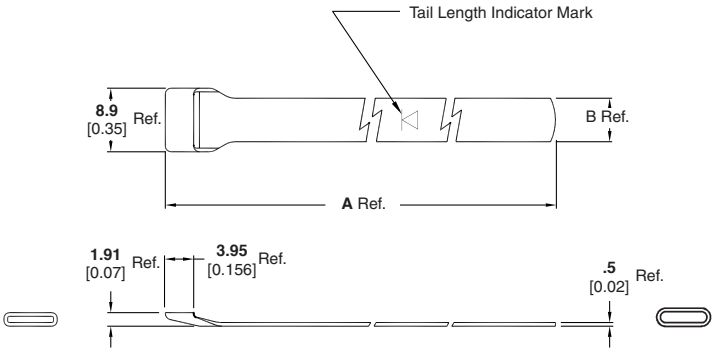

One Step Clamping Band — Straight

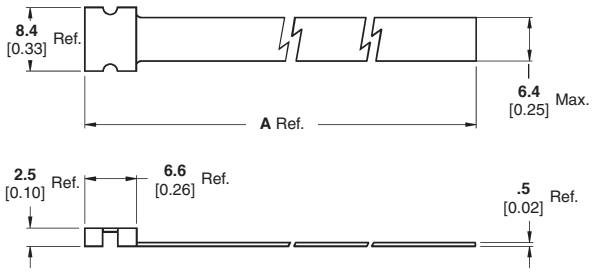

Two Step Clamping Band — Straight

Part Number	Entry SIzes	A Ref. ±1.5 [±0.06]
BND-1225S	03 to 24	**305.0** 12.00
BND-0812S	04 to 14	**304.8** 12.00

Available in:	Americas	Europe	Asia Pacific
	■	■	■

Dimensions are shown for reference purposes only. Specifications subject to change.

Dimensions are in millimeters unless otherwise specified.

USA: +1 800 522 6752
Asia Pacific: +86 0 400 820 6015
UK: +44 800 267 666

For additional support numbers please visit www.te.com

Code 18 MIL-C-5015 (MS3100)

Braided Adapters

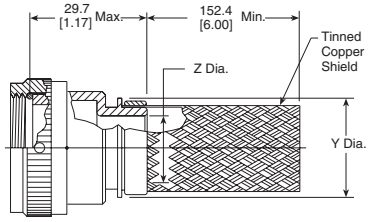

218M7XX-XXXXX

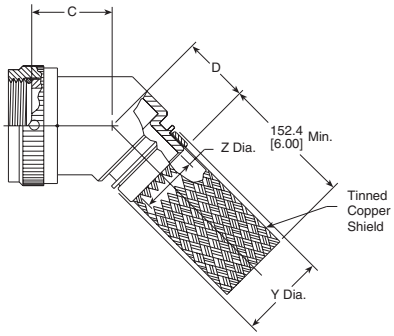

218M8XX-XXXXX

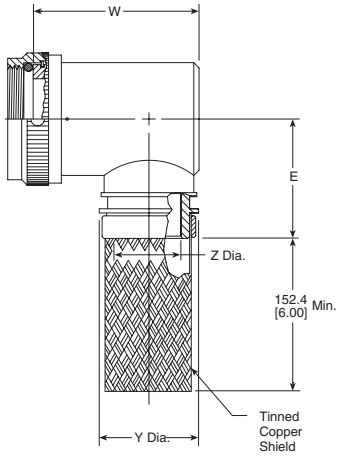

218M9XX-XXXXX

Manufacturer Code	Connector Manufacturer MS3100/3101/3106
A	Amphenol-Class A
B	Bendix-Class A/E/R
C	Cannon-Class A/E/R
D*	Unknown-Class A/E/R
R	Amphenol-Class R
—	Manufacturer code not required

*Additional pieces supplied when manufacturer is unknown.
All thread sizes for order number apply.

Available in:	Americas	Europe	Asia Pacific
	■	■	■

Catalog 1654025
Revised 3-13

www.te.com

Dimensions are shown for reference purposes only. Specifications subject to change.

Dimensions are in millimeters unless otherwise specified.

USA: +1 800 522 6752
Asia Pacific: +86 0 400 820 6015
UK: +44 800 267 666

For additional support numbers please visit www.te.com

Code 18 MIL-C-5015 (MS3100) (Continued)

Braided Adapters
(continued)

Table of Dimensions

Order No.	Shell Size	Manufacturer Code	Max. Entry Size, Type 1**	Thread	Dimensions		
					C Max.	D Max.	E Max.
08	8S	B	04	.375-32 UNEF	20.3 [0.80]	23.4 [0.92]	31.2 [1.23]
08	8S	C	04	.438-28 UNEF	20.3 [0.80]	23.4 [0.92]	31.2 [1.23]
08	8S	A, R	04	.438-27 UNS	20.3 [0.80]	23.4 [0.92]	31.2 [1.23]
08	8S	D	04	See * above.	20.3 [0.80]	23.4 [0.92]	31.2 [1.23]
10	10S	—	06	.500-28 UNEF	21.1 [0.83]	24.1 [0.95]	31.2 [1.23]
11	10SL	C	07	.562-24 UNEF	21.1 [0.83]	24.1 [0.83]	31.2 [1.23]
11	10SL	A, B, R	07	.625-24 UNEF	21.1 [0.83]	24.1 [0.95]	31.2 [1.23]
11	10SL	D	07	See * above.	21.1 [0.83]	24.1 [0.95]	31.2 [1.23]
12	12 & 12S	B, C	08	.625-24 UNEF	21.1 [0.83]	24.1 [0.95]	31.2 [1.23]
12	12 & 12S	A, R	08	.688-24 UNEF	21.8 [0.86]	24.9 [0.98]	33.0 [1.30]
12	12 & 12S	D	08	See * above.	21.8 [0.86]	24.9 [0.98]	33.0 [1.30]
14	14 & 14S	—	10	.750-20 UNEF	21.8 [0.86]	24.9 [0.98]	33.0 [1.30]
16	16 & 16S	—	12	.875-20 UNEF	22.6 [0.89]	25.9 [1.02]	36.1 [1.42]
18	18	—	12	1.000-20 UNEF	23.4 [0.92]	26.7 [1.05]	37.6 [1.48]
20	20	A, B, C	16	1.125-18 UNEF	24.1 [0.95]	27.4 [1.08]	39.4 [1.55]
20	20	R	16	1.125-24 UNS	24.1 [0.95]	27.4 [1.08]	39.4 [1.55]
20	20	D	16	See * above.	24.1 [0.95]	27.4 [1.08]	39.4 [1.55]
22	22	—	18	1.250-18 UNEF	24.9 [0.98]	28.2 [1.11]	40.9 [1.61]
24	24	—	20	1.375-18 UNEF	24.9 [0.98]	28.2 [1.11]	42.4 [1.67]
28	28	—	24	1.625-18 UNEF	27.4 [1.08]	29.7 [1.17]	47.2 [1.86]
32	32	B, C	24	1.875-16 UN	28.2 [1.11]	31.2 [1.23]	48.8 [1.92]
32	32	A, R	24	1.906-18 UN	28.2 [1.11]	31.2 [1.23]	48.8 [1.92]
32	32	D	24	See * above.	28.2 [1.11]	31.2 [1.23]	48.8 [1.92]
36	36	B	24	2.062-16 UNS	31.2 [1.23]	32.3 [1.27]	52.1 [2.05]
36	36	R	24	2.062-20 UNS	31.2 [1.23]	32.3 [1.27]	52.1 [2.05]
36	36	C	24	2.125-16 UN	31.2 [1.23]	32.3 [1.27]	52.1 [2.05]
36	36	A	24	2.125-18 UNS	31.2 [1.23]	32.3 [1.27]	52.1 [2.05]
36	36	D	24	See * above.	31.2 [1.23]	32.3 [1.27]	52.1 [2.05]
40	40	B	24	2.312-16 UNS	32.3 [1.27]	33.0 [1.30]	55.1 [2.17]
40	40	A, C, R	24	2.375-16 UN	32.3 [1.27]	33.0 [1.30]	55.1 [2.17]
40	40	D	24	See * above.	32.3 [1.27]	33.0 [1.30]	55.1 [2.17]
44	44	–	24	2.625-16 UN	34.0 [1.34]	34.5 [1.36]	61.5 [2.42]
48	48	C	24	2.812-18 UNS	34.0 [1.34]	34.5 [1.36]	61.5 [2.42]
48	48	A, R	24	2.875-16 UN	34.0 [1.34]	34.5 [1.36]	61.5 [2.42]
48	48	D	24	See * above.	34.0 [1.34]	34.5 [1.36]	61.5 [2.42]

**For larger than maximum type 1 entry sizes, a two-piece adapter will be supplied. Contact TE for information.

Entry Size Dimensions

Entry Size	Dimensions		
	Z Dia. +0.25–0.5	Y Dia. ±0.38	W Max.
04	6.35 [0.250]	11.58 [0.456]	31.2 [1.23]
05	7.92 [0.312]	13.08 [0.515]	32.8 [1.29]
06	9.53 [0.375]	14.76 [0.581]	34.3 [1.35]
07	11.13 [0.438]	16.33 [0.643]	36.1 [1.42]
08	12.70 [0.500]	17.91 [0.705]	37.6 [1.48]
10	15.88 [0.625]	21.11 [0.831]	40.6 [1.60]
12	19.05 [0.750]	24.21 [0.953]	43.9 [1.73]
14	22.23 [0.875]	27.46 [1.081]	47.0 [1.85]
16	25.40 [1.000]	30.61 [1.205]	50.8 [2.00]
18	28.58 [1.125]	35.08 [1.381]	54.1 [2.13]
20	31.75 [1.250]	38.25 [1.506]	57.2 [2.25]
22	34.93 [1.375]	41.43 [1.631]	—
24	38.10 [1.500]	44.60 [1.756]	—

Dimensions are shown for reference purposes only. Specifications subject to change.

Dimensions are in millimeters unless otherwise specified.

USA: +1 800 522 6752
Asia Pacific: +86 0 400 820 6015
UK: +44 800 267 666

For additional support numbers please visit www.te.com

Code 18 MIL-C-5015 (MS3100) (Continued)

Solid Adapters

Manufacturer Code	Connector Manufacturer MS3100/3101/3106
A	Amphenol-Class A
B	Bendix-Class A/E/R
C	Cannon-Class A/E/R
D*	Unknown-Class A/E/R
R	Amphenol-Class R
—	Manufacturer code not required

*Additional pieces supplied when manufacturer is unknown.
All thread sizes for order number apply.

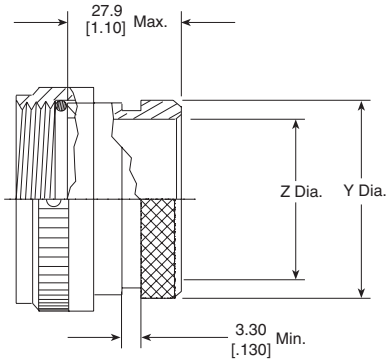

218M6XX-XXX

Table of Dimensions

Order No.	Shell Size	Manufacturer Code	Thread	Dimensions	
				Y ±0.5	Z Min.
08	8S	B	.375–32 UNEF	13.2 [0.52]	6.22 [0.24]
08	8S	C	.438–28 UNEF	13.2 [0.52]	7.80 [0.31]
08	8S	A, R	.438–27 UNS	13.2 [0.52]	7.80 [0.31]
08	8S	D	See * above.	13.2 [0.52]	7.80 [0.31]
10	10S	—	.500–28 UNEF	15.0 [0.59]	9.40 [0.37]
11	10SL	C	.562–24 UNEF	15.0 [0.59]	11.00 [0.43]
11	10SL	A, B, R	.625–24 UNEF	19.3 [0.76]	12.57 [0.49]
11	10SL	D	See * above.	19.3 [0.76]	11.00 [0.43]
12	12 & 12S	B, C	.625–24 UNEF	19.3 [0.76]	12.57 [0.49]
12	12 & 12S	A, R	.688–24 UNEF	19.3 [0.76]	14.15 [0.56]
12	12 & 12S	D	See * above.	19.3 [0.76]	12.57 [0.49]
14	14 & 14S	—	.750–20 UNEF	20.9 [0.82]	15.75 [0.62]
16	16 & 16S	—	.875–20 UNEF	24.1 [0.95]	18.92 [0.74]
18	18	—	1.000 - 20 UNEF	26.1 [1.03]	20.50 [0.81]
20	20	A, B, C	1.125–18 UNEF	34.0 [1.34]	25.27 [0.99]
20	20	R	1.125–24 UNS	34.0 [1.34]	25.27 [0.99]
20	20	D	See * above.	34.0 [1.34]	25.27 [0.99]
22	22	—	1.250–18 UNEF	36.3 [1.43]	28.45 [1.12]
24	24	—	1.375–18 UNEF	40.5 [1.59]	31.62 [1.24]
28	28	—	1.625–18 UNEF	43.0 [1.69]	34.80 [1.37]
32	32	B, C	1.875–16 UN	48.4 [1.91]	41.15 [1.62]
32	32	A, R	1.906–18 UN	48.4 [1.91]	41.15 [1.62]
32	32	D	See * above.	48.4 [1.91]	41.15 [1.62]
36	36	B	2.062–16 UNS	54.7 [2.15]	47.50 [1.87]
36	36	R	2.062–20 UNS	54.7 [2.15]	47.50 [1.87]
36	36	C	2.125–16 UN	54.7 [2.15]	47.50 [1.87]
36	36	A	2.125–18 UNS	54.7 [2.15]	47.50 [1.87]
36	36	D	See * above.	54.7 [2.15]	47.50 [1.87]
40	40	B	2.312–16 UNS	60.6 [2.39]	53.85 [2.12]
40	40	A, C, R	2.375–16 UN	60.6 [2.39]	53.85 [2.12]
40	40	D	See * above.	60.6 [2.39]	53.85 [2.12]
44	44	–	2.625–16 UN	67.1 [2.64]	60.20 [2.37]
48	48	C	2.812–18 UNS	73.5 [2.89]	66.55 [2.62]
48	48	A, R	2.875–16 UN	73.5 [2.89]	66.55 [2.62]
48	48	D	See * above.	73.5 [2.89]	66.55 [2.62]

Available in:	Americas	Europe	Asia Pacific
	■	■	■

Catalog 1654025
Revised 3-13

www.te.com

Dimensions are shown for reference purposes only. Specifications subject to change.

Dimensions are in millimeters unless otherwise specified.

USA: +1 800 522 6752
Asia Pacific: +86 0 400 820 6015
UK: +44 800 267 666

For additional support numbers please visit www.te.com

Code 18 MIL-C-5015 (MS3100) (Continued)

Solid Adapters
(continued)

Molded Part Selection Guide (Solid)

Y Diameter	Standard K Parts			Low-Profile D Parts		
	Straight Part No.	90° Part No.	Cable OD (min.)	Straight Part No.	90° Part No.	Cable OD (Min.)
13.2 [0.52]	202W232	—	4.3 [0.19]	—	—	—
13.2 [0.52]	202K121	222K121	5.6 [0.22]	202D211	222D211	6.4 [0.25]
15.0 [0.59]	202K132	222K132	5.9 [0.23]	202D221	222D221	7.4 [0.29]
19.2 [0.76]	202K142	222K142	7.1 [0.28]	202D232	222D232	8.4 [0.33]
20.9 [0.82]	202K142	222K142	7.1 [0.28]	202D232	222D232	8.4 [0.33]
24.1 [0.95]	202K153	222K152	8.4 [0.33]	202D242	222D242	9.7 [0.38]
26.1 [1.03]	202K153	222K152	8.4 [0.33]	202D242	222D242	9.7 [0.38]
34.0 [1.34]	202K163	222K163	9.9 [0.33]	202D253	222D253	10.4 [0.41]
36.2 [1.43]	202K174	222K174	15.7 [0.62]	202D263	222D263	12.2 [0.48]
40.5 [1.59]	202K174	222K174	15.7 [0.62]	202D263	222D263	12.2 [0.48]
43.0 [1.69]	202K174	222K174	15.7 [0.62]	202D263	222D263	12.2 [0.48]
48.4 [1.91]	202K185	222K185	16.8 [0.66]	202D274	222D274	14.3 [0.56]
54.7 [2.15]	202K185	222K185	16.8 [0.66]	202D274	222D274	14.3 [0.56]
60.6 [2.39]	—	—	—	202D285	222D285	17.5 [0.68]
67.1 [2.64]	—	—	—	202D296	222D296	19.6 [0.76]
73.5 [2.89]	—	—	—	202D299	222D299	22.9 [0.89]

Uniboot Parts

Y Diameter	Part No.	Cable OD (Min.)
13.2 [0.52]	202C611	4.8 [0.19]
15.0 [0.59]	202C621	8.1 [0.32]
19.3 [0.76]	202C621	8.1 [0.32]
20.9 [0.82]	202C632	12.7 [0.50]
24.1 [0.95]	202C632	12.7 [0.50]
26.1 [1.03]	202C642	17.5 [0.69]
34.0 [1.34]	202C653	22.4 [0.88]
36.3 [1.43]	202C653	22.4 [0.88]
40.5 [1.59]	202C653	22.4 [0.88]
43.0 [1.69]	202C663	22.9 [0.90]
48.4 [1.91]	202C663	22.9 [0.90]
54.7 [2.15]	202C663	22.9 [0.90]
60.6 [2.39]	202C663	22.9 [0.90]
67.1 [2.64]	202C663	22.9 [0.90]
73.5 [2.89]	202C663	22.9 [0.90]

Catalog 1654025
Revised 3-13

www.te.com

Dimensions are shown for reference purposes only. Specifications subject to change.

Dimensions are in millimeters unless otherwise specified.

USA: +1 800 522 6752
Asia Pacific: +86 0 400 820 6015
UK: +44 800 267 666

For additional support numbers please visit www.te.com

Code 18 MIL-C-5015 (MS3100) (Continued)

Spin-Coupling Adapters

Manufacturer Code	Connector Manufacturer MS3100/3101/3106
A	Amphenol-Class A
B	Bendix-Class A/E/R
C	Cannon-Class A/E/R
D*	Unknown-Class A/E/R
R	Amphenol-Class R
—	Manufacturer code not required

*Additional pieces supplied when manufacturer is unknown.
All thread sizes for order number apply.

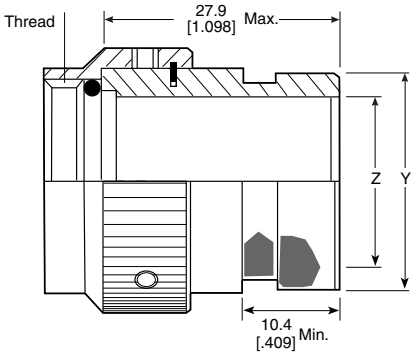

218M6XX-XXX

Table of Dimensions

Order No.	Shell Size	Manufacturer Code	Thread	Dimensions Y ±0.5	Dimensions Z Min.
08	8S	B	.375–32 UNEF	13.2 [0.52]	6.22 [0.24]
08	8S	C	.438–28 UNEF	13.2 [0.52]	7.80 [0.31]
08	8S	A, R	.438–27 UNS	13.2 [0.52]	7.80 [0.31]
08	8S	D	See * above.	13.2 [0.52]	7.80 [0.31]
10	10S	—	.500–28 UNEF	15.0 [0.59]	9.40 [0.37]
11	10SL	C	.562–24 UNEF	15.0 [0.59]	11.00 [0.43]
11	10SL	A, B, R	.625–24 UNEF	19.3 [0.76]	12.57 [0.49]
11	10SL	D	See * above.	19.3 [0.76]	11.00 [0.43]
12	12 & 12S	B, C	.625–24 UNEF	19.3 [0.76]	12.57 [0.49]
12	12 & 12S	A, R	.688–24 UNEF	19.3 [0.76]	14.15 [0.56]
12	12 & 12S	D	See * above.	19.3 [0.76]	12.57 [0.49]
14	14 & 14S	—	.750–20 UNEF	20.9 [0.82]	15.75 [0.62]
16	16 & 16S	—	.875–20 UNEF	24.1 [0.95]	18.92 [0.74]
18	18	—	1.000 - 20 UNEF	26.1 [1.03]	20.50 [0.81]
20	20	A, B, C	1.125–18 UNEF	34.0 [1.34]	25.27 [0.99]
20	20	R	1.125–24 UNS	34.0 [1.34]	25.27 [0.99]
20	20	D	See * above.	34.0 [1.34]	25.27 [0.99]
22	22	—	1.250–18 UNEF	36.3 [1.43]	28.45 [1.12]
24	24	—	1.375–18 UNEF	40.5 [1.59]	31.62 [1.24]
28	28	—	1.625–18 UNEF	43.0 [1.69]	34.80 [1.37]
32	32	B, C	1.875–16 UN	48.4 [1.91]	41.15 [1.62]
32	32	A, R	1.906–18 UN	48.4 [1.91]	41.15 [1.62]
32	32	D	See * above.	48.4 [1.91]	41.15 [1.62]
36	36	B	2.062–16 UNS	54.7 [2.15]	47.50 [1.87]
36	36	R	2.062–20 UNS	54.7 [2.15]	47.50 [1.87]
36	36	C	2.125–16 UN	54.7 [2.15]	47.50 [1.87]
36	36	A	2.125–18 UNS	54.7 [2.15]	47.50 [1.87]
36	36	D	See * above.	54.7 [2.15]	47.50 [1.87]
40	40	B	2.312–16 UNS	60.6 [2.39]	53.85 [2.12]
40	40	A, C, R	2.375–16 UN	60.6 [2.39]	53.85 [2.12]
40	40	D	See * above	60.6 [2.39]	53.85 [2.12]
44	44	–	2.625–16 UN	67.1 [2.64]	60.20 [2.37]
48	48	C	2.812–18 UNS	73.5 [2.89]	66.55 [2.62]
48	48	A, R	2.875–16 UN	73.5 [2.89]	66.55 [2.62]
48	48	D	See * above	73.5 [2.89]	66.55 [2.62]

Available in:	Americas	Europe	Asia Pacific
	■	■	■

Catalog 1654025
Revised 3-13

www.te.com

Dimensions are shown for reference purposes only. Specifications subject to change.

Dimensions are in millimeters unless otherwise specified.

USA: +1 800 522 6752
Asia Pacific: +86 0 400 820 6015
UK: +44 800 267 666

For additional support numbers please visit www.te.com

Code 18 MIL-C-5015 (MS3100) (Continued)

Molded Part Selection Guide (Spin-Coupling)

Y Diameter	Standard K Parts			Low-Profile D Parts		
	Straight Part No.	90° Part No.	Cable OD (Min.)	Straight Part No.	90° Part No.	Cable OD (Min.)
13.2 [0.52]		202W232	4.3 [0.19]			
13.2 [0.52]	202K121	222K121	5.6 [0.22]	202D211	222D211	6.4 [0.25]
15.0 [0.59]	202K132	222K132	5.9 [0.23]	202D221	222D221	7.4 [0.29]
19.2 [0.76]	202K142	222K142	7.1 [0.28]	202D232	222D232	8.4 [0.33]
20.9 [0.82]	202K142	222K142	7.1 [0.28]	202D232	222D232	8.4 [0.33]
24.1 [0.95]	202K153	222K152	8.4 [0.33]	202D242	222D242	9.7 [0.38]
26.1 [1.03]	202K153	222K152	8.4 [0.33]	202D242	222D242	9.7 [0.38]
34.0 [1.34]	202K163	222K163	9.9 [0.33]	202D253	222D253	10.4 [0.41]
36.2 [1.43]	202K174	222K174	15.7 [0.62]	202D263	222D263	12.2 [0.48]
40.5 [1.59]	202K174	222K174	15.7 [0.62]	202D263	222D263	12.2 [0.48]
43.0 [1.69]	202K174	222K174	15.7 [0.62]	202D263	222D263	12.2 [0.48]
48.4 [1.91]	202K185	222K185	16.8 [0.66]	202D274	222D274	14.3 [0.56]
54.7 [2.15]	202K185	222K185	16.8 [0.66]	202D274	222D274	14.3 [0.56]

Uniboot Parts

Y Diameter	Part No.	Cable OD (Min.)
13.2 [0.52]	202C611	4.8 [0.19]
15.0 [0.59]	202C621	8.1 [0.32]
19.3 [0.76]	202C621	8.1 [0.32]
20.9 [0.82]	202C632	12.7 [0.50]
24.1 [0.95]	202C632	12.7 [0.50]
26.1 [1.03]	202C642	17.5 [0.69]
34.0 [1.34]	202C653	22.4 [0.88]
36.3 [1.43]	202C653	22.4 [0.88]
40.5 [1.59]	202C653	22.4 [0.88]
43.0 [1.69]	202C663	22.9 [0.90]
48.4 [1.91]	202C663	22.9 [0.90]
54.7 [2.15]	202C663	22.9 [0.90]

Catalog 1654025
Revised 3-13

www.te.com

Dimensions are shown for reference purposes only. Specifications subject to change.

Dimensions are in millimeters unless otherwise specified.

USA: +1 800 522 6752
Asia Pacific: +86 0 400 820 6015
UK: +44 800 267 666

For additional support numbers please visit www.te.com

Code 18 MIL-C-5015 (MS3100) (Continued)

Tinel-Lock Adapters

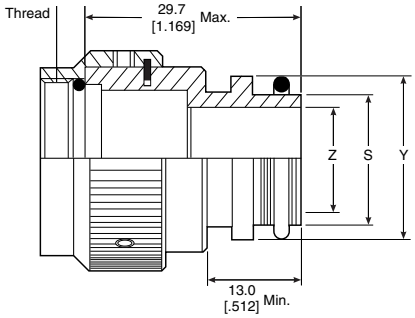

TXR18XX00-XXXXXX

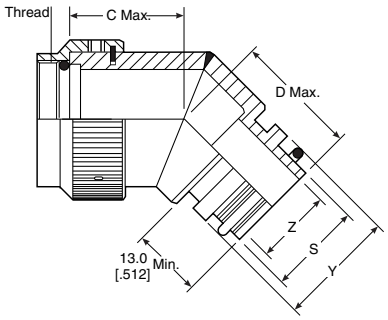

TXR18XX45-XXXXXX

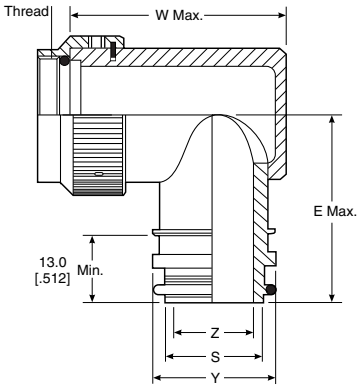

TXR18XX90-XXXXXX

Manufacturer Code	Connector Manufacturer MS3100/3101/3106
A	Amphenol-Class A
B	Bendix-Class A/E/R
C	Cannon-Class A/E/R
D*	Unknown-Class A/E/R
R	Amphenol-Class R
—	Manufacturer code not required

*Additional pieces supplied when manufacturer is unknown.
All thread sizes for order number apply.

Available in:	Americas	Europe	Asia Pacific
	■	■	■

Catalog 1654025
Revised 3-13

www.te.com

Dimensions are shown for reference purposes only. Specifications subject to change.

Dimensions are in millimeters unless otherwise specified.

USA: +1 800 522 6752
Asia Pacific: +86 0 400 820 6015
UK: +44 800 267 666

For additional support numbers please visit www.te.com

Code 18 MIL-C-5015 (MS3100) (Continued)

Tinel-Lock Adapters
(continued)

Table of Dimensions

Order No.	Shell Size	Manufacturer Code	Max. Entry Size, Type 1**	Thread	Dimensions		
					C Max.	D Max.	E Max.
08	8S	B	04	.375-32 UNEF	20.3 [0.80]	23.4 [0.92]	31.2 [1.23]
08	8S	C	04	.438-28 UNEF	20.3 [0.80]	23.4 [0.92]	31.2 [1.23]
08	8S	A, R	04	.438-27 UNS	20.3 [0.80]	23.4 [0.92]	31.2 [1.23]
08	8S	D	04	*	20.3 [0.80]	23.4 [0.92]	31.2 [1.23]
10	10S	—	06	.500-28 UNEF	21.1 [0.83]	24.1 [0.95]	31.2 [1.23]
11	10SL	C	07	.562-24 UNEF	21.1 [0.83]	24.1 [0.83]	31.2 [1.23]
11	10SL	A, B, R	07	.625-24 UNEF	21.1 [0.83]	24.1 [0.95]	31.2 [1.23]
11	10SL	D	07	*	21.1 [0.83]	24.1 [0.95]	31.2 [1.23]
12	12 & 12S	B, C	08	.625-24 UNEF	21.1 [0.83]	24.1 [0.95]	31.2 [1.23]
12	12 & 12S	A, R	08	.688-24 UNEF	21.8 [0.86]	24.9 [0.98]	33.0 [1.30]
12	12 & 12S	D	08	*	21.8 [0.86]	24.9 [0.98]	33.0 [1.30]
14	14 & 14S	—	10	.750-20 UNEF	21.8 [0.86]	24.9 [0.98]	33.0 [1.30]
16	16 & 16S	—	12	.875-20 UNEF	22.6 [0.89]	25.9 [1.02]	36.1 [1.42]
18	18	—	12	1.000-20 UNEF	23.4 [0.92]	26.7 [1.05]	37.6 [1.48]
20	20	A, B, C	16	1.125-18 UNEF	24.1 [0.95]	27.4 [1.08]	39.4 [1.55]
20	20	R	16	1.125-24 UNS	24.1 [0.95]	27.4 [1.08]	39.4 [1.55]
20	20	D	16	*	24.1 [0.95]	27.4 [1.08]	39.4 [1.55]
22	22	—	18	1.250-18 UNEF	24.9 [0.98]	28.2 [1.11]	40.9 [1.61]
24	24	—	20	1.375-18 UNEF	24.9 [0.98]	28.2 [1.11]	42.4 [1.67]
28	28	—	22	1.625-18 UNEF	27.4 [1.08]	29.7 [1.17]	47.2 [1.86]
32	32	B, C	24	1.875-16 UN	28.2 [1.11]	31.2 [1.23]	48.8 [1.92]
32	32	A, R	24	1.906-18 UN	28.2 [1.11]	31.2 [1.23]	48.8 [1.92]
32	32	D	24	*	28.2 [1.11]	31.2 [1.23]	48.8 [1.92]
36	36	B	24	2.062-16 UNS	31.2 [1.23]	32.3 [1.27]	52.1 [2.05]
36	36	R	24	2.062-20 UNS	31.2 [1.23]	32.3 [1.27]	52.1 [2.05]
36	36	C	24	2.125-16 UN	31.2 [1.23]	32.3 [1.27]	52.1 [2.05]
36	36	A	24	2.125-18 UNS	31.2 [1.23]	32.3 [1.27]	52.1 [2.05]
36	36	D	24	*	31.2 [1.23]	32.3 [1.27]	52.1 [2.05]
40	40	B	24	2.312-16 UNS	32.3 [1.27]	33.0 [1.30]	55.1 [2.17]
40	40	A, C, R	24	2.375-16 UN	32.3 [1.27]	33.0 [1.30]	55.1 [2.17]
40	40	D	24	*	32.3 [1.27]	33.0 [1.30]	55.1 [2.17]
44	44	—	24	2.625-16 UN	34.0 [1.34]	34.5 [1.36]	61.5 [2.42]
48	48	C	24	2.812-18 UNS	34.0 [1.34]	34.5 [1.36]	61.5 [2.42]
48	48	A, R	24	2.875-16 UN	34.0 [1.34]	34.5 [1.36]	61.5 [2.42]
48	48	D	24	*	34.0 [1.34]	34.5 [1.36]	61.5 [2.42]

* Additional pieces, etc. (from page 6-36)
**For larger than maximum type 1 entry sizes, a two-piece adapter will be supplied. Contact TE for information.

Dimensions are shown for reference purposes only. Specifications subject to change.

Dimensions are in millimeters unless otherwise specified.

USA: +1 800 522 6752
Asia Pacific: +86 0 400 820 6015
UK: +44 800 267 666

For additional support numbers please visit www.te.com

Code 18 MIL-C-5015 (MS3100) (Continued)

Tinel-Lock Adapters
(continued)

Entry Size Dimensions

Entry Size	Dimensions			
	Z Dia. +0.25–0.5	S Diameter (min.–max.)	Y Dia. ±0.38	W Max.
04	6.35 [0.25]	9.39–9.56 [0.37–0.38]	13.97 [0.55]	31.50 [1.24]
05	7.92 [0.31]	10.97–11.13 [0.43–0.44]	15.54 [0.61]	34.30 [1.35]
06	9.52 [0.37]	12.57–12.73 [0.49–0.50]	17.14 [0.67]	35.80 [1.41]
07	11.09 [0.44]	14.12–14.31 [0.55–0.56]	18.71 [0.74]	37.30 [1.47]
08	12.70 [0.50]	15.72–15.91 [0.62–0.63]	20.32 [0.80]	39.10 [1.54]
10	15.87 [0.62]	18.84–19.11 [0.74–0.75]	23.49 [0.92]	41.40 [1.63]
12	19.05 [0.75]	22.02–22.28 [0.87–0.88]	26.67 [1.05]	45.50 [1.79]
14	22.23 [0.88]	25.17–25.46 [0.99–1.00]	29.84 [1.17]	48.80 [1.92]
16	25.40 [1.00]	28.34–28.63 [1.12–1.13]	33.02 [1.30]	51.80 [2.04]
18	28.57 [1.12]	31.52–31.81 [1.24–1.25]	36.19 [1.42]	54.90 [2.16]
20	31.75 [1.25]	34.69–34.98 [1.37–1.38]	39.37 [1.55]	58.20 [2.29]
22	34.93 [1.38]	37.79–38.15 [1.49–1.50]	42.55 [1.68]	66.80 [2.63]
24	38.10 [1.50]	40.97–41.33 [1.61–1.63]	45.72 [1.80]	70.10 [2.76]

Molded Part Selection Guide (Tinel)

Tinel-Lock Entry Size	Standard K Parts			Low-Profile D Parts		
	Straight Part No.	90° Part No.	Cable OD (min.)	Straight Part No.	90° Part No.	Cable OD (Min.)
04	202K232	—	3.30 [0.13]	—	—	—
04	202W232	—	4.30 [0.19]	—	—	—
04	202K121	222K121	5.60 [0.22]	202D211	222D211	6.40 [0.25]
05, 06	202K132	222K132	5.90 [0.23]	202D221	222D221	7.40 [0.29]
07, 08	202K142	222K142	7.10 [0.28]	202D232	222D232	8.40 [0.33]
10, 12	202K153	222K152	8.40 [0.33]	202D242	222D242	9.70 [0.38]
14, 16	202K163	222K163	9.90 [0.39]	202D253	222D253	10.50 [0.41]
18, 20, 22	202K174	222K174	15.70 [0.62]	202D263	222D263	12.20 [0.48]
24	202K185	222K185	16.80 [0.66]	—	—	—

Uniboot Parts

Tinel-Lock Entry Size	Part No.	Cable OD (min.)
04	202C611	4.8 [0.19]
05, 06, 07	202C621	8.1 [0.32]
08, 10, 12	202C632	12.7 [0.50]
12, 14, 16	202C642	17.5 [0.69]
16, 18, 20, 22	202C653	22.4 [0.88]

Dimensions are shown for reference purposes only. Specifications subject to change.

Dimensions are in millimeters unless otherwise specified.

USA: +1 800 522 6752
Asia Pacific: +86 0 400 820 6015
UK: +44 800 267 666

For additional support numbers please visit www.te.com

Code 21 MIL-C-26482 Series 1

Braided Adapters

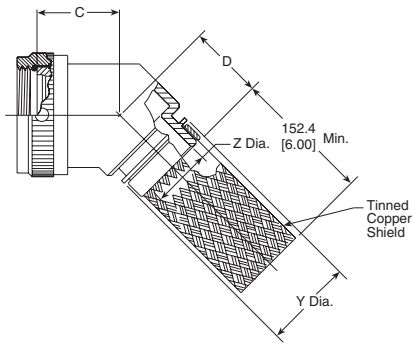

206M1XX-XXXXX

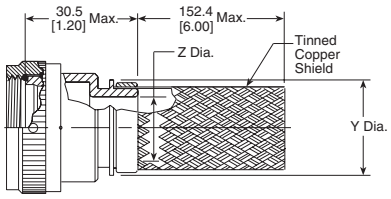

206M0XX-XXXXX

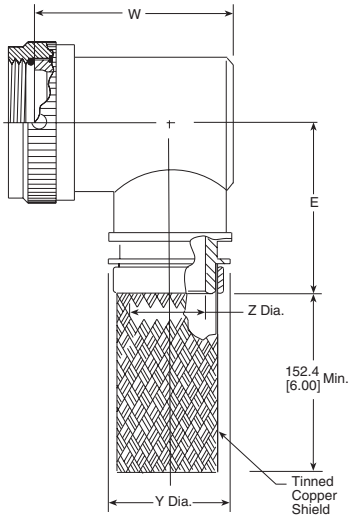

206M2XX-XXXXX

Table of Dimensions

Order No.	Shell Size	Max. Entry Size, Type 1*	Thread	Dimensions		
				C Max.	D Max.	E Max.
08	8	04	.438-28 UNEF	21.6 [0.85]	23.1 [0.91]	29.0 [1.14]
10	10	06	.562-24 UNEF	22.4 [0.88]	23.9 [0.94]	30.5 [1.20]
12	12	08	.688-24 UNEF	23.1 [0.91]	24.6 [0.97]	32.3 [1.27]
14	14	10	.812-20 UNEF	23.4 [0.92]	24.9 [0.98]	33.5 [1.32]
16	16	12	.938-20 UNEF	24.1 [0.95]	25.7 [1.01]	34.8 [1.37]
18	18	12	1.062-18 UNEF	24.4 [0.96]	25.9 [1.02]	36.3 [1.43]
20	20	14	1.188-18 UNEF	25.1 [0.99]	26.7 [1.05]	38.1 [1.50]
22	22	16	1.312-18 UNEF	25.7 [1.01]	27.4 [1.08]	39.6 [1.56]
24	24	18	1.438-18 UNEF	26.2 [1.03]	27.7 [1.09]	40.9 [1.61]

*For larger than maximum type 1 entry sizes, a two-piece adapter will be supplied. Contact TE for information.

Entry Size Dimensions

Entry Size	Dimensions		
	Z +0.25–0.5	Y Dia.	W Max.
04	6.35 [0.25]	13.97 [0.55]	31.0 [1.22]
05	7.92 [0.31]	15.54 [0.61]	32.8 [1.29]
06	9.52 [0.37]	17.14 [0.67]	34.3 [1.35]
07	11.09 [0.44]	18.71 [0.74]	35.8 [1.41]
08	12.70 [0.50]	20.32 [0.80]	37.3 [1.47]
10	15.87 [0.62]	23.49 [0.92]	40.6 [1.60]
12	19.05 [0.75]	26.67 [1.05]	43.7 [1.72]
14	22.23 [0.88]	29.84 [1.17]	47.0 [1.85]
16	25.40 [1.00]	33.02 [1.30]	50.0 [1.97]
18	28.57 [1.12]	36.19 [1.42]	53.3 [2.10]

Available in:	Americas	Europe	Asia Pacific
	■	■	■

Catalog 1654025
Revised 3-13

www.te.com

Dimensions are shown for reference purposes only. Specifications subject to change.

Dimensions are in millimeters unless otherwise specified.

USA: +1 800 522 6752
Asia Pacific: +86 0 400 820 6015
UK: +44 800 267 666

For additional support numbers please visit www.te.com

Code 21 MIL-C-26482 Series 1 (Continued)

Solid Adapters

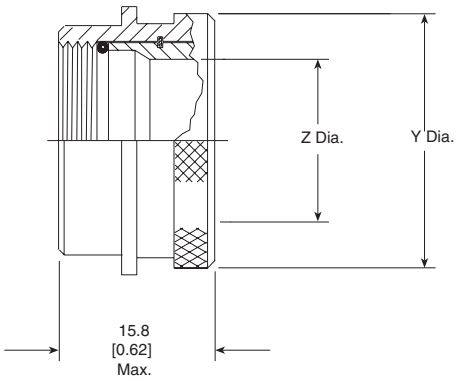

203M6XX-XXX

Table of Dimensions

Order Number	Shell Size	Thread	Dimensions	
			Y +0.000-0.030 (+0.00) (-0.76) Dia.	Z Min.
08	8	.438-28 UNEF	17.88 [0.704]	6.63 [0.26]
10	10	.562-24 UNEF	21.06 [0.829]	9.27 [0.36]
12	12	.688-24 UNEF	24.23 [0.954]	12.98 [0.51]
14	14	.812-20 UNEF	27.41 [1.079]	15.37 [0.61]
16	16	.938-20 UNEF	31.85 [1.254]	18.54 [0.73]
18	18	1.062-18 UNEF	33.03 [1.316]	20.90 [0.82]
20	20	1.188-18 UNEF	36.63 [1.442]	24.10 [0.95]
22	22	1.312-18 UNEF	39.78 [1.566]	27.28 [1.07]
24	24	1.438-18 UNEF	42.98 [1.692]	29.67 [1.17]

Molded Part Selection Guide (Solid)

Order No.	Standard K Parts			Low-Profile D Parts		
	Straight Part No.	90° Part No.	Cable OD (Min.)	Straight Part No.	90° Part No.	Cable OD (Min.)
08	202K132	222K132	5.9 [0.23]	202D221	222D221	7.4 [0.29]
10	202K142	222K142	7.1 [0.28]	202D232	222D232	8.4 [0.33]
12, 14	202K153	222K152	8.4 [0.33]	202D242	222D242	9.7 [0.38]
16, 18	202K163	222K163	9.9 [0.39]	202D253	222D253	10.5 [0.41]
20, 22, 24	202K174	222K174	15.7 [0.62]	202D263	222D263	12.2 [0.48]

Uniboot Parts

Order No.	Part No.	Cable OD (Min.)
08	202C621	8.1 [0.32]
10	202C632	12.7 [0.50]
12, 14	202C642	17.5 [0.69]
16, 18, 20, 22, 24	202C653	22.4 [0.88]

Available in:	Americas	Europe	Asia Pacific
	■	■	■

Catalog 1654025
Revised 3-13

www.te.com

Dimensions are shown for reference purposes only. Specifications subject to change.

Dimensions are in millimeters unless otherwise specified.

USA: +1 800 522 6752
Asia Pacific: +86 0 400 820 6015
UK: +44 800 267 666

For additional support numbers please visit www.te.com

Code 21 MIL-C-26482 Series 1 (Continued)

Spin-Coupling Adapters

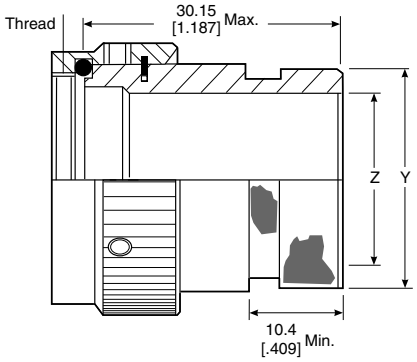

203M9XX-XXX

Table of Dimensions

Order No.	Shell Size	Thread	Dimensions	
			Y +0.00–0.76 Dia.	Z Min.
08	8	.438-28 UNEF	13.54 [0.53]	6.63 [0.26]
10	10	.562-24 UNEF	15.37 [0.61]	9.27 [0.36]
12	12	.688-24 UNEF	19.66 [0.77]	12.98 [0.51]
14	14	.812-20 UNEF	21.29 [0.84]	15.37 [0.61]
16	16	.938-20 UNEF	24.46 [0.96]	18.54 [0.73]
18	18	1.062-18 UNEF	26.47 [1.04]	20.90 [0.82]
20	20	1.188-18 UNEF	30.91 [1.22]	24.10 [0.95]
22	22	1.312-18 UNEF	34.42 [1.36]	27.28 [1.07]
24	24	1.438-18 UNEF	36.65 [1.44]	29.67 [1.17]

Molded Part Selection Guide (Spin-Coupling)

Order No.	Standard K Parts			Low-profile D Parts		
	Straight Part No.	90° Part No.	Cable OD (Min.)	Straight Part No.	90° Part No.	Cable OD (Min.)
08	202W232	—	4.3 [0.19]	—	—	—
08	202K121	222K121	5.6 [0.22]	202D211	222D211	6.4 [0.25]
10	202K132	222K132	5.9 [0.23]	202D221	222D221	7.4 [0.29]
12, 14	202K142	222K142	7.1 [0.28]	202D232	222D232	8.4 [0.33]
16, 18	202K153	222K152	8.4 [0.33]	202D242	222D242	9.7 [0.38]
20, 22	202K163	222K163	9.9 [0.39]	202D253	222D253	10.5 [0.41]
24	202K174	222K174	15.7 [0.62]	202D263	222D263	12.2 [0.48]

Uniboot Parts

Order No.	Part No.	Cable OD (Min.)
08	202C611	4.8 [0.19]
10, 12	202C621	8.1 [0.32]
14, 16	202C632	12.7 [0.50]
18, 20	202C642	17.5 [0.69]
22, 24	202C653	22.4 [0.88]

Available in:	Americas	Europe	Asia Pacific
	■	■	■

Dimensions are shown for reference purposes only. Specifications subject to change.

Dimensions are in millimeters unless otherwise specified.

USA: +1 800 522 6752
Asia Pacific: +86 0 400 820 6015
UK: +44 800 267 666

For additional support numbers please visit www.te.com

Code 21 MIL-C-26482 Series 1 (Continued)

Tinel-Lock Adapters

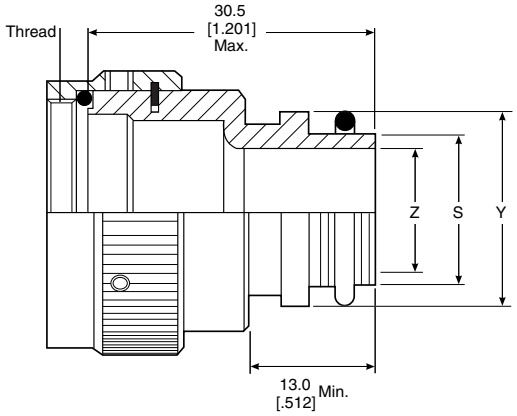

TXR21XX00-XXXX XX

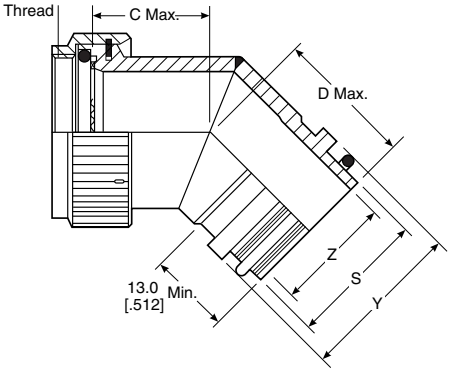

TXR21XX45-XXXXXX

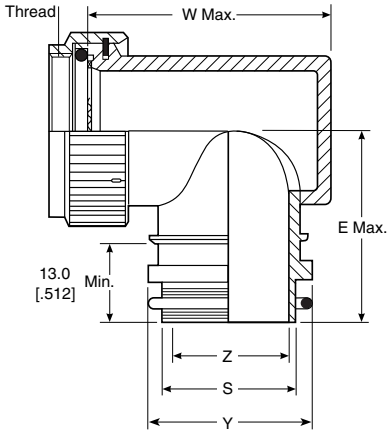

TXR21XX90-XXXXXX

Available in:	Americas	Europe	Asia Pacific
	■	■	■

Catalog 1654025
Revised 3-13

www.te.com

Dimensions are shown for reference purposes only. Specifications subject to change.

Dimensions are in millimeters unless otherwise specified.

USA: +1 800 522 6752
Asia Pacific: +86 0 400 820 6015
UK: +44 800 267 666

For additional support numbers please visit www.te.com

Code 21 MIL-C-26482 Series 1 (Continued)

Tinel-Lock Adapters
(continued)

Table of Dimensions

Order No.	Shell Size	Max. Entry Size, Type 1*	Thread	Dimensions		
				C Max.	D Max.	E Max.
08	8	04	.438-28 UNEF	21.6 [0.85]	23.1 [0.91]	29.0 [1.14]
10	10	06	.562-24 UNEF	22.4 [0.88]	23.9 [0.94]	30.5 [1.20]
12	12	08	.688-24 UNEF	23.1 [0.91]	24.6 [0.97]	32.3 [1.27]
14	14	10	.812-20 UNEF	23.4 [0.92]	24.9 [0.98]	33.5 [1.32]
16	16	12	.938-20 UNEF	24.1 [0.95]	25.7 [1.01]	34.8 [1.37]
18	18	12	1.062-18 UNEF	24.4 [0.96]	25.9 [1.02]	36.3 [1.43]
20	20	14	1.188-18 UNEF	25.1 [0.99]	26.7 [1.05]	38.1 [1.50]
22	22	16	1.312-18 UNEF	25.7 [1.01]	27.4 [1.08]	39.6 [1.56]
24	24	18	1.438-18 UNEF	26.2 [1.03]	27.7 [1.09]	40.9 [1.61]

*For larger than maximum type 1 entry sizes, a two-piece adapter will be supplied. Contact TE for information.

Entry Size Dimensions

Entry Size	Dimensions			
	Z +0.25–0.5	S Diameter(Min.–Max.)	Y Dia.	W Max.
04	6.35 [0.25]	9.39–9.56 [0.37–0.38]	13.97 [0.55]	31.0 [1.22]
05	7.92 [0.31]	10.97–11.13 [0.43–0.44]	15.54 [0.61]	32.8 [1.29]
06	9.52 [0.37]	12.57–12.73 [0.49–0.50]	17.14 [0.67]	34.3 [1.35]
07	11.09 [0.44]	14.12–14.31 [0.55–0.56]	18.71 [0.74]	35.8 [1.41]
08	12.7 [0.50]	15.72–15.91 [0.62–0.63]	20.32 [0.80]	37.3 [1.47]
10	15.87 [0.62]	18.84–19.11 [0.74–0.75]	23.49 [0.92]	40.6 [1.60]
12	19.05 [0.75]	22.02–22.28 [0.87–0.88]	26.67 [1.05]	43.7 [1.72]
14	22.23 [0.88]	25.17–25.46 [0.99–1.00]	29.84 [1.17]	47.0 [1.85]
16	25.4 [1.00]	28.34–28.63 [1.12–1.13]	33.02 [1.30]	50.0 [1.97]
18	28.57 [1.12]	31.52–31.81 [1.24–1.25]	36.19 [1.42]	53.3 [2.10]

Molded Part Selection Guide (Tinel)

Tinel-Lock Entry Size	Standard K Parts			Low-profile D Parts		
	Straight Part No.	90° Part No.	Cable OD (Min.)	Straight Part No.	90° Part No.	Cable OD (Min.)
04	202K232	—	3.3 [0.1]	—	—	—
04	202W232	—	4.3 [0.2]	—	—	—
04	202K121	222K121	5.6 [0.2]	202D211	222D211	6.4 [0.3]
05, 06	202K132	222K132	5.9 [0.2]	202D221	222D221	7.4 [0.3]
07, 08	202K142	222K142	7.1 [0.3]	202D232	222D232	8.4 [0.3]
10, 12	202K153	222K152	8.4 [0.3]	202D242	222D242	9.7 [0.4]
14, 16	202K163	222K163	9.9 [0.4]	202D253	222D253	10.5 [0.4]
18, 20, 22	202K174	222K174	15.7 [0.6]	202D263	222D263	12.2 [0.5]
24	202K185	222K185	16.8 [0.7]	—	—	—

Uniboot Parts

Tinel-Lock Entry Size	Part No.	Cable OD (Min.)
04	202C611	4.8 [0.19]
05, 06, 07	202C621	8.1 [0.32]
08, 10, 12	202C632	12.7 [0.50]
12, 14, 16	202C642	17.5 [0.69]
16, 18, 20, 22	202C653	22.4 [0.88]
24	202C663	22.9 [0.90]

Catalog 1654025
Revised 3-13

www.te.com

Dimensions are shown for reference purposes only. Specifications subject to change.

Dimensions are in millimeters unless otherwise specified.

USA: +1 800 522 6752
Asia Pacific: +86 0 400 820 6015
UK: +44 800 267 666

For additional support numbers please visit www.te.com

Code 21 MIL-C-26482 Series 1 (Continued)

CRES-Lock Adapters (USA)
BND Adapters (Europe)

Code 21 Band Strap Adapter

Notes:
1. This product is designed to terminate a braided cable shield by means of a band strap and a heat shrinkable lipped boot to a connector.
2. See CH00-0250-016 for ordering information, modifications and additional dimensions.
3. See drawing BND-XX25S for band strap dimensions and information.
4. Adapter to be permanently marked with code identification number and full part number (e.g. 06090-BND21AB00-1812). Band strap shall bear no part marking.
5. All entry sizes are shown in Table II. Maximum entry sizes are as shown in Table I. For larger entry sizes than the maximum, a Type II adapter may be supplied. See CH00-0250-016 for further details.
6. Adapter mates to: MIL-C-26482 Series I, MS3110, MS3116, MS3120 and MS3126 Class E and F Connectors.
7. Anti-rotational set screw, 3 threaded holes 120° ± 5° apart, single mating set screw supplied: AN565DC4H2. Not required for Type II adapters.

For additional codes available, contact TE.

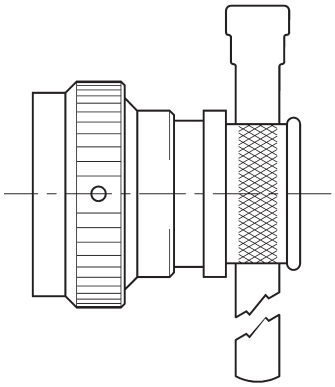

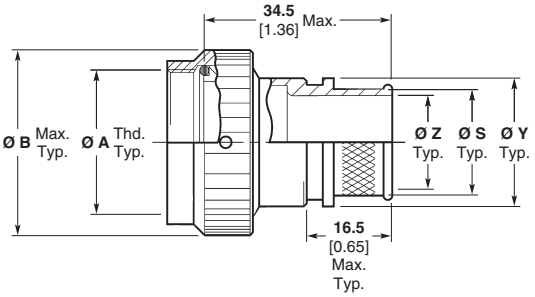

Straight Adapter
Code 00

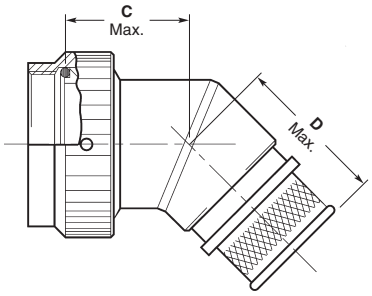

45° Adapter
Code 45

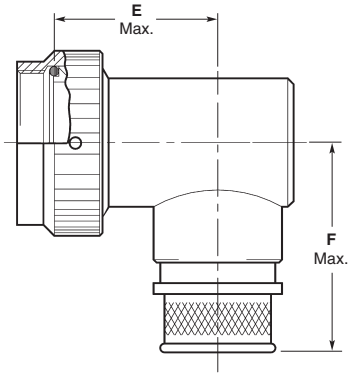

90° Adapter
Code 90

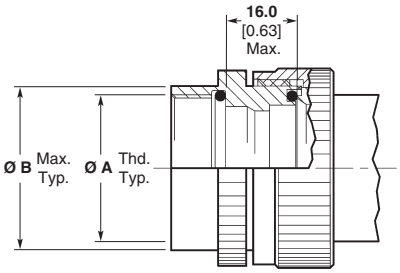

Type II Modification
(See Note 5)

Available in:	Americas	Europe	Asia Pacific
	■	■	■

Catalog 1654025
Revised 3-13

www.te.com

Dimensions are shown for reference purposes only. Specifications subject to change.

Dimensions are in millimeters unless otherwise specified.

USA: +1 800 522 6752
Asia Pacific: +86 0 400 820 6015
UK: +44 800 267 666

For additional support numbers please visit www.te.com

Code 21 MIL-C-26482 Series 1 (Continued)

CRES-Lock Adapters (USA) BND Adapters (Europe) (continued)

Code 21 Band Strap Adapter (Continued)

Table I

Order Number	Shell Size[2]	Entry Size Max. Type I[1]	Ø A Unified Thread UNEF Class 2B	Ø B Max.	C Max.	D Max.	F Max.
08	08	04	0.4375–28	**18.3** 0.72	**21.6** 0.85	**27.2** 1.07	**33.0** 1.30
10	10	06	0.5625–24	**21.6** 0.85	**22.4** 0.88	**27.9** 1.10	**34.5** 1.36
12	12	08	0.6875–24	**24.9** 0.98	**23.1** 0.91	**28.7** 1.13	**36.3** 1.43
14	14	10	0.8125–20	**28.2** 1.11	**23.4** 0.92	**29.0** 1.14	**37.6** 1.48
16	16	12	0.9375–20	**31.2** 1.23	**24.1** 0.95	**29.7** 1.17	**38.9** 1.53
18	18	13	1.0625–18	**34.5** 1.36	**24.4** 0.96	**30.0** 1.18	**40.4** 1.59
20	20	15	1.1875–18	**37.6** 1.48	**25.1** 0.99	**30.7** 1.21	**42.2** 1.66
22	22	16	1.3125–18	**40.6** 1.60	**25.7** 1.01	**31.5** 1.24	**43.7** 1.72
24	24	18	1.4375–18	**43.2** 1.70	**26.2** 1.03	**31.8** 1.25	**45.0** 1.77

1. All entry sizes are shown in Table II. Maximum entry sizes are as shown in Table I. For larger entry sizes than the maximum, a Type II adapter may be supplied. See CH00-0250-016 for further details.
2. Adapter mates to: MIL-C-26482 Series I, MS3110, MS3116, MS3120 and MS3126 Class E and F Connectors.

Table II

Entry Size	Ø Z +0.25/-0.50 [+0.010/-0.020]	Ø S ±0.51 [±0.020]	Ø Y ±0.38 [±0.015]	E Max.
03	**4.75** 0.188	**7.92** 0.312	**11.10** 0.438	**19.0** 0.75
04	**6.35** 0.250	**9.52** 0.375	**12.70** 0.500	**19.8** 0.78
05	**7.92** 0.312	**11.12** 0.438	**14.30** 0.563	**20.1** 0.79
06	**9.52** 0.375	**12.70** 0.500	**15.88** 0.625	**21.1** 0.83
07	**11.12** 0.438	**14.30** 0.562	**17.50** 0.689	**21.6** 0.85
08	**12.70** 0.500	**15.88** 0.625	**19.05** 0.750	**22.6** 0.89
09	**14.30** 0.562	**17.50** 0.688	**20.65** 0.813	**23.6** 0.93
10	**15.88** 0.625	**19.05** 0.750	**22.23** 0.875	**24.4** 0.96
11	**17.50** 0.688	**20.65** 0.812	**23.80** 0.938	**24.9** 0.98
12	**19.05** 0.750	**22.23** 0.875	**25.40** 1.000	**25.9** 1.02
13	**20.65** 0.812	**23.83** 0.938	**27.00** 1.063	**26.7** 1.05
14	**22.23** 0.875	**25.40** 1.000	**30.16** 1.189	**27.4** 1.08

Table II (Continued)

Entry Size	Ø Z +0.25/-0.50 [+0.010/-0.020]	Ø S ±0.51 [±0.020]	Ø Y ±0.38 [±0.015]	E Max.
15	**23.83** .0938	**27.00** 1.062	**31.75** 1.250	**28.2** 1.11
16	**25.40** 1.000	**28.58** 1.125	**33.34** 1.313	**29.0** 1.14
18	**28.58** 1.125	**31.75** 1.250	**36.51** 1.438	**30.5** 1.20
20	**31.75** 1.250	**34.90** 1.375	**39.69** 1.563	N/A
22	**34.90** 1.375	**38.10** 1.500	**42.86** 1.688	N/A
24	**38.10** 1.500	**41.28** 1.625	**46.83** 1.844	N/A
26	**41.28** 1.625	**44.45** 1.750	**49.61** 1.953	N/A
28	**44.45** 1.750	**47.63** 1.875	**52.78** 2.078	N/A
30	**47.65** 1.875	**50.80** 2.000	**56.36** 2.219	N/A
32	**50.80** 2.000	**54.00** 2.125	**59.53** 2.344	N/A
34	**54.00** 2.125	**57.15** 2.250	**62.71** 2.469	N/A

Code 32 MIL-C-22992

Braided Adapters

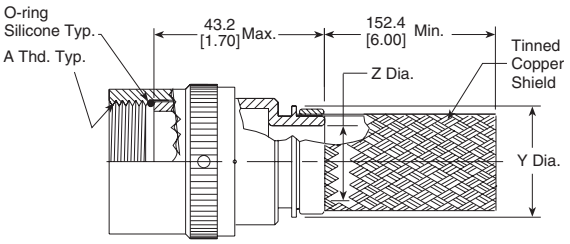

207M3XX-XXXXX

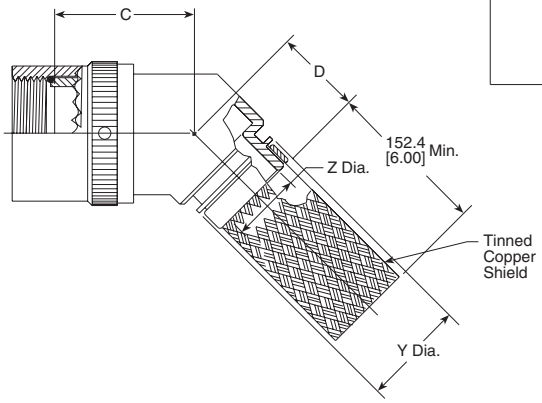

212M4XX-XXXXX

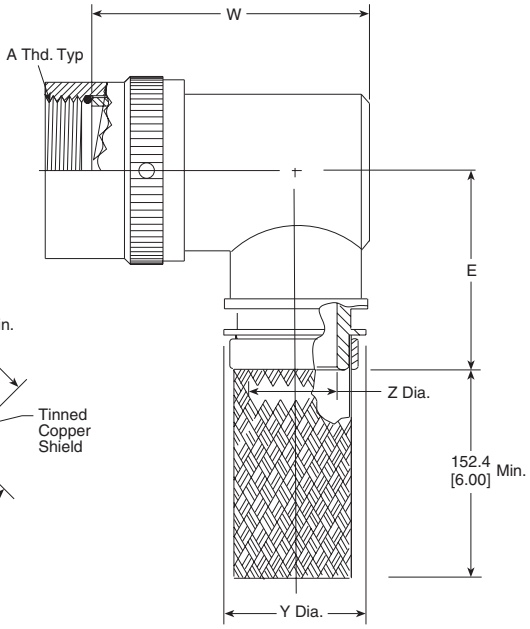

212M5XX-XXXXX

Available in:	Americas	Europe	Asia Pacific
	■	■	■

Catalog 1654025
Revised 3-13

www.te.com

Dimensions are shown for reference purposes only. Specifications subject to change.

Dimensions are in millimeters unless otherwise specified.

USA: +1 800 522 6752
Asia Pacific: +86 0 400 820 6015
UK: +44 800 267 666

For additional support numbers please visit www.te.com

Code 32 MIL-C-22992 (Continued)

Braided Adapters
(continued)

Table of Dimensions

Order No.	Shell Size	Max. Entry Size, Type 1*	A Left Hand Thd. Class 2B	Dimensions		
				C Max.	D Max.	E Max
12	12	08	.750-20 UNEF	29.0 [1.14]	25.4 [1.00]	33.5 [1.32]
14	14	10	.875-20 UNEF	29.7 [1.17]	25.9 [1.02]	35.3 [1.39]
16	16	12	1.000-20 UNEF	30.0 [1.18]	26.2 [1.03]	37.1 [1.46]
18	18	14	1.125-18 UNEF	30.7 [1.21]	26.9 [1.06]	38.6 [1.52]
20	20	16	1.250-18 UNEF	31.2 [1.23]	27.7 [1.09]	40.1 [1.58]
22	22	18	1.375-18 UNEF	32.0 [1.26]	28.2 [1.11]	41.7 [1.64]
24	24	22	1.625-18 UNEF	33.5 [1.32]	30.0 [1.18]	46.5 [1.83]
28	28	24	1.875-16 UN	34.8 [1.37]	31.2 [1.23]	49.8 [1.96]
32	32	28	2.062-16 UNS	36.3 [1.43]	32.5 [1.28]	52.8 [2.08]
36	36	28	2.312-16 UNS	37.6 [1.48]	33.8 [1.33]	56.1 [2.21]
40	40	28	2.625-16 UN	38.9 [1.53]	35.3 [1.39]	58.9 [2.32]

*For larger than maximum type 1 entry sizes, a two-piece adapter will be supplied.
Contact TE for information.

Entry Size Dimensions

Entry Size	Dimensions		
	Z ± 0.20 (± 0.51)	Y Dia. Min.	W Max.
03	4.75 [.187]	9.98 [.393]	39.6 [1.56]
04	6.35 [.250]	11.58 [.456]	39.6 [1.56]
05	7.92 [.312]	13.08 [.515]	42.9 [1.69]
06	9.53 [.375]	14.76 [.581]	42.9 [1.69]
07	11.13 [.438]	16.33 [.643]	46.0 [1.81]
08	12.70 [.500]	17.91 [.705]	—
09	14.27 [.562]	17.91 [.705]	49.3 [1.94]
10	15.88 [.625]	21.11 [.831]	49.3 [1.94]
11	17.48 [.688]	22.68 [.893]	52.3 [2.06]
12	19.05 [.750]	24.21 [.953]	52.3 [2.06]
13	20.62 [.812]	24.21 [.953]	55.6 [2.19]
14	22.23 [.875]	27.46 [1.081]	55.6 [2.19]
15	23.83 [.938]	29.03 [1.143]	59.9 [2.36]
16	25.40 [1.000]	30.61 [1.205]	59.9 [2.36]
18	28.58 [1.125]	35.08 [1.381]	69.6 [2.74]
20	31.75 [1.250]	38.25 [1.506]	72.6 [2.86]
22	34.93 [1.375]	41.43 [1.631]	75.9 [2.99]
24	38.10 [1.500]	44.60 [1.756]	79.0 [3.11]
28	44.45 [1.750]	50.90 [2.004]	85.3 [3.36]

Catalog 1654025
Revised 3-13

www.te.com

Dimensions are shown for reference purposes only. Specifications subject to change.

Dimensions are in millimeters unless otherwise specified.

USA: +1 800 522 6752
Asia Pacific: +86 0 400 820 6015
UK: +44 800 267 666

For additional support numbers please visit www.te.com

Code 32 MIL-C-22992 (Continued)

Spin-Coupling Adapters

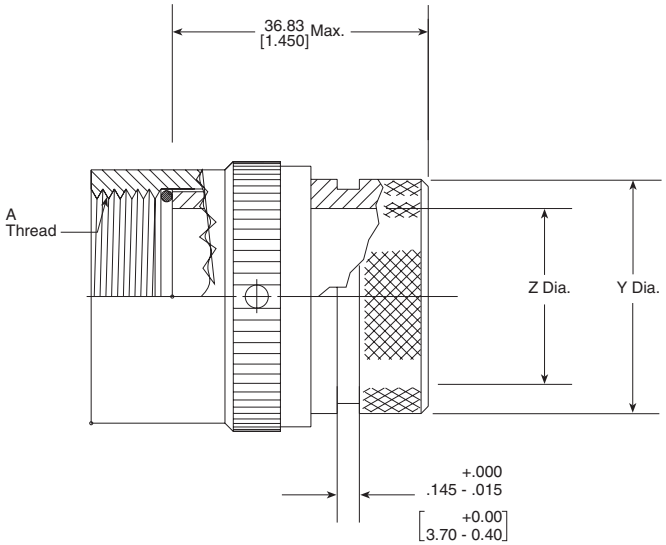

204M3XX-XXX

Table of Dimensions

Base Part Number	Shell Size	A L.H. Thread Class 2B	Dimensions Y ± .020 (±0.51)	Dimensions Z Min.
12	12	.750-20 UNEF	20.24 [.797]	12.47 [.491]
14	14	.875-20 UNEF	23.44 [.923]	14.35 [.565]
16	16	1.000-20 UNEF	26.42 [1.040]	17.53 [.690]
18	18	1.125-18 UNEF	31.17 [1.227]	18.19 [.716]
20	20	1.250-18 UNEF	34.49 [1.358]	21.72 [.855]
22	22	1.375-18 UNEF	37.21 [1.465]	25.02 [.985]
24	24	1.625-18 UNEF	42.82 [1.686]	30.48 [1.200]
28	28	1.875-16 UN	50.06 [1.971]	36.58 [1.440]
32	32	2.062-16 UNS	55.35 [2.179]	40.77 [1.605]
36	36	2.312-16 UNEF	61.01 [2.402]	52.96 [2.085]
40	40	2.625-16 UNS	67.46 [2.656]	57.15 [2.250]
44	44	2.875-16 UNS	70.66 [2.782]	62.46 [2.549]

*For larger than maximum type 1 entry sizes, a two-piece adapter will be supplied.
Contact TE for information.

Molded Part Size Selection Guide (Spin-Coupling)

Order No.	Standard K Parts Straight Part No.	Standard K Parts 90° Part No.	Standard K Parts Cable OD (Min.)	Low-profile D Parts Straight Part No.	Low-profile D Parts 90° Part No.	Low-profile D Parts Cable OD (Min.)
12	202K142	222K142	7.1 [0.28]	202D232	222D232	8.4 [0.33]
14, 16	202K153	222K152	8.4 [0.33]	202D242	222D242	9.7 [0.38]
18, 20	202K163	222K163	9.9 [0.39]	202D253	222D253	10.5 [0.41]
22, 24	202K174	222K174	15.7 [0.62]	202D263	222D263	12.2 [0.48]
26, 32, 36	202K185	222K185	16.8 [0.66]	—	—	—

Uniboot Parts

Order No.	Part No.	Cable OD (Min.)
12	202C632	12.7 [0.50]
14, 16	202C642	17.5 [0.69]
18, 20, 22, 24	202C653	22.4 [0.88]

Available in:	Americas	Europe	Asia Pacific
	■	■	■

Catalog 1654025
Revised 3-13

www.te.com

Dimensions are shown for reference purposes only. Specifications subject to change.

Dimensions are in millimeters unless otherwise specified.

USA: +1 800 522 6752
Asia Pacific: +86 0 400 820 6015
UK: +44 800 267 666

For additional support numbers please visit www.te.com

Code 32 MIL-C-22992 (Continued)

Tinel-Lock Adapters

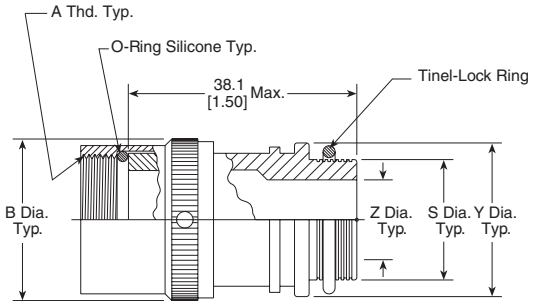

TXR32XX00-XXXXXX

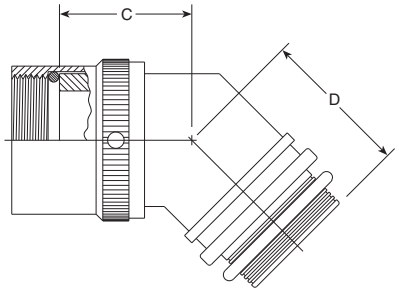

TXR32XX45-XXXXXX

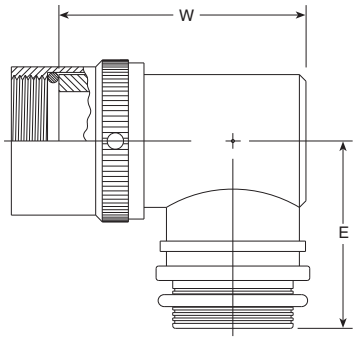

TXR32XX90-XXXXXX

Order No.	Shell Size	Max. Entry Size Type I	Dimensions							
			A Left Hand Thd Class 2B	C Max.	D Max.	E Max.	Z + .010 - .020	S Dia.	Y ± .015 (± 0.38)	W Max.
12	12	08	.750-20 UNEF	29.0 [1.14]	25.4 [1.00]	33.5 [1.32]	19.05 [.750]	22.28 [.877] / 22.02 [.867]	26.67 [1.050]	52.3 [2.06]
14	14	10	.875-20 UNEF	29.7 [1.17]	25.9 [1.02]	35.3 [1.39]	22.23 [.875]	25.46 [1.002] / 25.17 [.991]	29.84 [1.175]	55.6 [2.19]
16	16	12	1.000-20 UNEF	30.0 [1.18]	26.2 [1.03]	37.1 [1.46]	25.40 [1.000]	28.63 [1.127] / 28.34 [1.116]	33.02 [1.300]	59.01 [2.36]
18	18	14	1.125-18 UNEF	30.7 [1.21]	26.9 [1.06]	38.6 [1.52]	28.57 [1.125]	31.81 [1.252] / 31.52 [1.241]	36.19 [1.425]	69.6 [2.74]
20	20	16	1.250-18 UNEF	31.2 [1.23]	27.7 [1.09]	40.1 [1.58]	31.75 [1.250]	34.98 [1.377] / 34.69 [1.366]	39..37 [1.550]	72.6 [2.86]
22	22	18	1.375-18 UNEF	32.0 [1.26]	28.2 [1.11]	41.7 [1.64]	34.93 [1.375]	38.15 [1.502] / 37.79 [1.488]	42.55 [1.675]	75.9 [2.99]
24	24	22	1.625-18 UNEF	33.5 [1.32]	30.0 [1.18]	46.5 [1.83]	38.10 [1.500]	41.33 [1.627] / 40.97 [1.613]	45.72 [1.800]	79.0 [3.11]
28	28	24	1.875-16 UN	34.8 [1.37]	31.2 [1.23]	49.8 [1.96]	—	—	—	—
32	32	24	2.062-16 UNS	36.3 [1.43]	32.5 [1.28]	52.8 [2.08]	—	—	—	—
36	36	24	2.312-16 UNS	37.6 [1.48]	33.8 [1.33]	56.1 [2.21]	—	—	—	—
40	40	24	2.625-16 UN	38.9 [1.53]	35.3 [1.39]	58.9 [2.32]	—	—	—	—

**For larger than maximum type 1 entry sizes, a two-piece adapter will be supplied. Contact TE for information.

Available in:	Americas	Europe	Asia Pacific
	■	■	■

Dimensions are shown for reference purposes only. Specifications subject to change.

Dimensions are in millimeters unless otherwise specified.

USA: +1 800 522 6752
Asia Pacific: +86 0 400 820 6015
UK: +44 800 267 666

For additional support numbers please visit www.te.com

Code 32 MIL-C-22992 (Continued)

CRES-Lock Adapters (USA)
BND Adapters (Europe)

Code 32 Band Strap Adapter

Notes:
1. This product is designed to terminate a braided cable shield by means of a band strap and a heat shrinkable lipped boot to a connector.
2. See CH00-0250-016 for ordering information, modifications and additional dimensions.
3. See drawing BND-XX25S for band strap dimensions and information.
4. Adapter to be permanently marked with code identification number and full part number (e.g. 06090-BND32AB00-1812). Band strap shall bear no part marking.
5. All entry sizes are shown in Table II. Maximum entry sizes are as shown in Table I. For larger entry sizes than the maximum, a Type II adapter may be supplied. See CH00-0250-016 for further details.
6. Adapter mates to: MIL-C-22992, Class C and R, MS17343, 44, 45 and 47 Connectors.
7. Anti-rotational set screw, 3 threaded holes 120° ± 5° apart, single mating set screw supplied: AN565DC4H2. Not required for Type II adapters.

For additional codes available, contact TE.

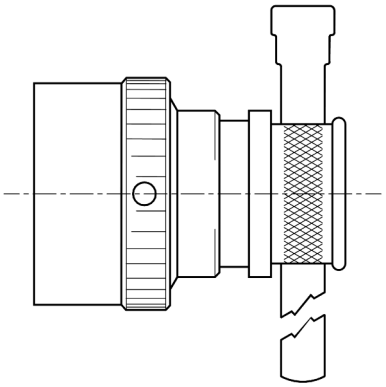

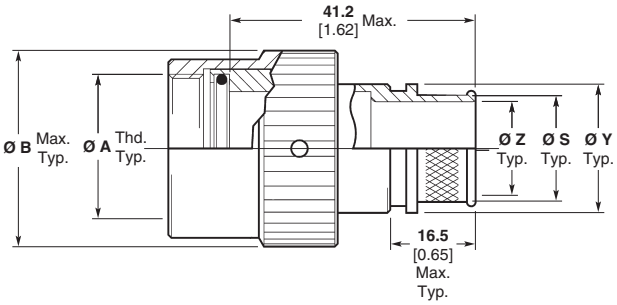

Straight Adapter
Code 00

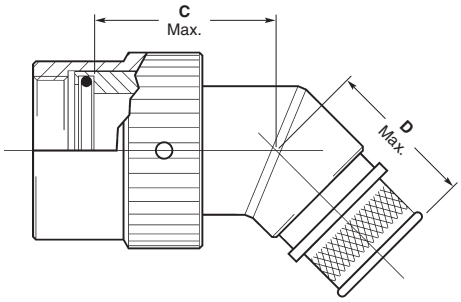

45° Adapter
Code 45

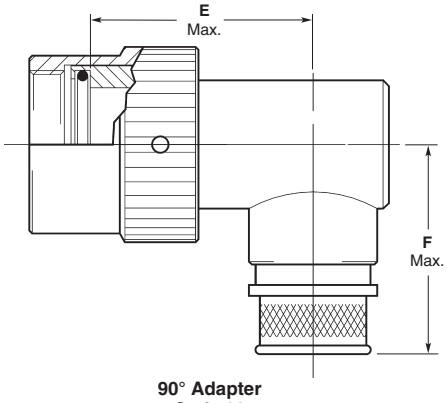

90° Adapter
Code 90

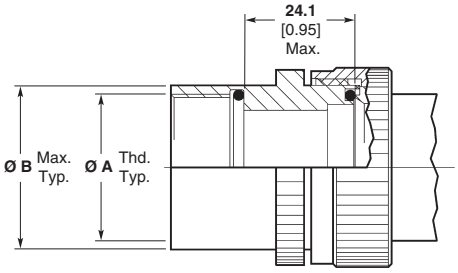

Type II Modification
(See Note 5)

Available in:	Americas	Europe	Asia Pacific
	■	■	■

Catalog 1654025
Revised 3-13

www.te.com

Dimensions are shown for reference purposes only. Specifications subject to change.

Dimensions are in millimeters unless otherwise specified.

USA: +1 800 522 6752
Asia Pacific: +86 0 400 820 6015
UK: +44 800 267 666

For additional support numbers please visit www.te.com

Code 32 MIL-C-22992 (Continued)

CRES-Lock Adapters (USA) BND Adapters (Europe) (continued)

Code 32 Band Strap Adapter (Continued)

Table I

Order Number	Shell Size[2]	Entry Size Max. Type I[1]	Ø A Unified Thread Class 2B	Ø B Max.	C Max.	D Max.	F Max.
12	12	08	0.7500–20 UNEF	**27.2** 1.07	**29.0** 1.14	**28.4** 1.12	**36.6** 1.44
14	14	10	0.8750–20 UNEF	**30.2** 1.19	**29.7** 1.17	**28.9** 1.14	**38.4** 1.51
16	16	12	1.0000–20 UNEF	**33.5** 1.32	**30.0** 1.18	**29.2** 1.15	**40.1** 1.58
18	18	14	1.1250–18 UNEF	**36.6** 1.44	**30.7** 1.21	**30.0** 1.18	**41.7** 1.64
20	20	16	1.2500–18 UNEF	**39.9** 1.57	**31.2** 1.23	**30.7** 1.21	**43.2** 1.70
22	22	18	1.3750–18 UNEF	**42.9** 1.69	**32.0** 1.26	**31.2** 1.23	**44.7** 1.76
24	24	22	1.6250–18 UNEF	**52.6** 2.07	**33.5** 1.32	**33.0** 1.30	**49.5** 1.95
28	28	26	1.8750–16 UN	**58.9** 2.32	**34.8** 1.37	**34.3** 1.35	**52.8** 2.08
32	32	30	2.0625–16 UNS	**65.3** 2.57	**36.3** 1.43	**35.6** 1.40	**55.9** 2.20
36	36	34	2.3125–16 UNS	**71.6** 2.82	**37.6** 1.48	**36.8** 1.45	**59.2** 2.33
40	40	34	2.6250–16 UN	**78.0** 3.07	**38.9** 1.53	**38.4** 1.51	**62.0** 2.44

1. All entry sizes are shown in Table II. Maximum entry sizes are as shown in Table I. For larger entry sizes than the maximum, a Type II adapter may be supplied. See CH00-0250-016 for further details.
2. Adapter mates to: MIL-C-22992, Class C and R, MS17343, 44, 45 and 47 Connectors.

Table II

Entry Size	Ø Z +0.25/-0.50 [+0.010/-0.020]	Ø S ±0.51 [±0.020]	Ø Y ±0.38 [±0.015]	E Max.
03	**4.75** 0.188	**7.92** 0.312	**11.10** 0.438	**28.3** 1.12
04	**6.35** 0.250	**9.52** 0.375	**12.70** 0.500	**29.3** 1.15
05	**7.92** 0.312	**11.12** 0.438	**14.30** 0.563	**30.0** 1.18
06	**9.52** 0.375	**12.70** 0.500	**15.88** 0.625	**30.8** 1.21
07	**11.12** 0.438	**14.30** 0.562	**17.50** 0.689	**31.5** 1.24
08	**12.70** 0.500	**15.88** 0.625	**19.05** 0.750	**32.3** 1.27
09	**14.30** 0.562	**17.50** 0.688	**20.65** 0.813	**33.3** 1.31
10	**15.88** 0.625	**19.05** 0.750	**22.23** 0.875	**34.0** 1.34
11	**17.50** 0.688	**20.65** 0.812	**23.80** 0.938	**35.0** 1.38
12	**19.05** 0.750	**22.23** 0.875	**25.40** 1.000	**35.8** 1.41
13	**20.65** 0.812	**23.83** 0.938	**27.00** 1.063	**36.0** 1.42
14	**22.23** 0.875	**25.40** 1.000	**30.16** 1.189	**37.5** 1.48

Table II (Continued)

Entry Size	Ø Z +0.25/-0.50 [+0.010/-0.020]	Ø S ±0.51 [±0.020]	Ø Y ±0.38 [±0.015]	E Max.
15	**23.83** .0938	**27.00** 1.062	**31.75** 1.250	**37.8** 1.49
16	**25.40** 1.000	**28.58** 1.125	**33.34** 1.313	**38.3** 1.51
18	**28.58** 1.125	**31.75** 1.250	**36.51** 1.438	**39.8** 1.57
20	**31.75** 1.250	**34.90** 1.375	**39.69** 1.563	**41.3** 1.63
22	**34.90** 1.375	**38.10** 1.500	**42.86** 1.688	**43.0** 1.69
24	**38.10** 1.500	**41.28** 1.625	**46.83** 1.844	**44.5** 1.75
26	**41.28** 1.625	**44.45** 1.750	**49.61** 1.953	**46.3** 1.82
28	**44.45** 1.750	**47.63** 1.875	**52.78** 2.078	**48.3** 1.90
30	**47.65** 1.875	**50.80** 2.000	**56.36** 2.219	**50.0** 1.97
32	**50.80** 2.000	**54.00** 2.125	**59.53** 2.344	**51.5** 2.03
34	**54.00** 2.125	**57.15** 2.250	**62.71** 2.469	**53.3** 2.10

Catalog 1654025
Revised 3-13

www.te.com

Dimensions are shown for reference purposes only. Specifications subject to change.

Dimensions are in millimeters unless otherwise specified.

USA: +1 800 522 6752
Asia Pacific: +86 0 400 820 6015
UK: +44 800 267 666

For additional support numbers please visit www.te.com

Code 40 MIL-C-38999 Series III and IV

Braided Adapters

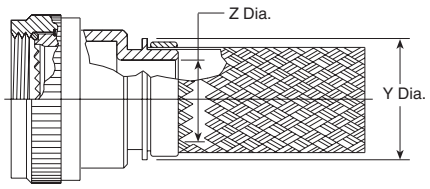

208M7XX-XXXXX

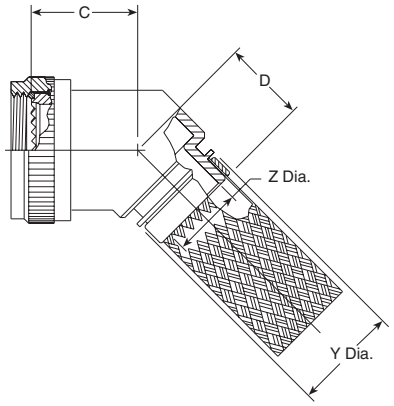

208M8XX-XXXXX

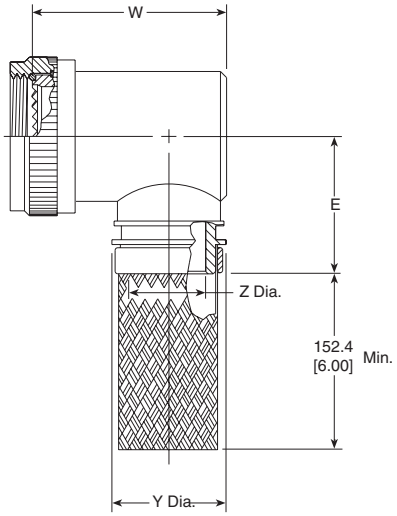

208M9XX-XXXXX

Table of Dimensions

Order No.	Shell Size Commercial	Military	Max. Entry* Size Type 1	Thread	Dimensions		
					C Max.	D Max.	E Max.
08	9	A	04	M12 x 1.0	20.8 [0.82]	22.6 [0.89]	29.2 [1.15]
10	11	B	07	M15 x 1.0	21.3 [0.84]	23.4 [0.92]	30.7 [1.21]
12	13	C	09	M18 x 1.0	22.1 [0.87]	24.1 [0.95]	32.5 [1.28]
14	15	D	10	M2 x 1.0	22.6 [0.89]	24.1 [0.95]	34.0 [1.34]
16	17	E	12	M25 x 1.0	23.4 [0.92]	24.9 [0.98]	35.6 [1.40]
18	19	F	14	M28 x 1.0	24.1 [0.95]	25.7 [1.01]	37.1 [1.46]
20	21	G	16	M31 x 1.0	24.6 [0.97]	26.4 [1.04]	38.9 [1.53]
22	23	H	18	M34 x 1.0	25.4 [1.00]	27.2 [1.07]	40.4 [1.59]
24	25	J	20	M37 x 1.0	25.9 [1.02]	27.2 [1.07]	42.4 [1.67]

*For larger than maximum type 1 entry sizes, a two-piece adapter will be supplied. Contact TE for information.

Available in:	Americas	Europe	Asia Pacific
	■	■	■

Catalog 1654025
Revised 3-13

www.te.com

Dimensions are shown for reference purposes only. Specifications subject to change.

Dimensions are in millimeters unless otherwise specified.

USA: +1 800 522 6752
Asia Pacific: +86 0 400 820 6015
UK: +44 800 267 666

For additional support numbers please visit www.te.com

Code 40 MIL-C-38999 Series III and IV (Continued)

Braided Adapters
(continued)

Entry Size Dimensions

Entry Size	Dimensions		
	Z +0.25–0.5	Y Dia.	W Max.
04	6.35 [0.25]	13.97 [0.55]	31.2 [1.23]
05	7.92 [0.31]	15.54 [0.61]	32.8 [1.29]
06	9.52 [0.37]	17.14 [0.67]	34.3 [1.35]
07	11.09 [0.44]	18.71 [0.74]	36.1 [1.42]
08	12.7 [0.50]	20.32 [0.80]	37.6 [1.48]
10	15.87 [0.62]	23.49 [0.92]	40.6 [1.60]
12	19.05 [0.75]	26.67 [1.05]	43.9 [1.73]
14	22.23 [0.88]	29.84 [1.17]	47.0 [1.85]
16	25.4 [1.00]	33.02 [1.30]	50.8 [2.00]
18	28.57 [1.12]	36.19 [1.42]	54.1 [2.13]
20	31.75 [1.25]	39.37 [1.55]	57.21 [2.25]

Molded Part Selection Guide (Braided)

Tinel-Lock Entry Size	Standard K Parts			Low-Profile D Parts		
	Straight Part No.	90° Part No.	Cable OD (Min.)	Straight Part No.	90° Part No.	Cable OD (Min.)
04	202K232	—	3.3 [0.1]	—	—	—
04	202W232	—	4.3 [0.2]	—	—	—
04	202K121	222K121	5.6 [0.2]	202D211	222D211	6.4 [0.3]
05, 06	202K132	222K132	5.9 [0.2]	202D221	222D221	7.4 [0.3]
07, 08	202K142	222K142	7.1 [0.3]	202D232	222D232	8.4 [0.3]
10, 12	202K153	222K152	8.4 [0.3]	202D242	222D242	9.7 [0.4]
14, 16	202K163	222K163	9.9 [0.4]	202D253	222D253	10.5 [0.4]
18, 20, 22	202K174	222K174	15.7 [0.6]	202D263	222D263	12.2 [0.5]
24	202K185	222K185	16.8 [0.7]	—	—	—

Uniboot Parts

Tinel- Lock Entry Size	Part No.	Cable OD (Min.)
04	202C611	4.8 [0.19]
05, 06, 07	202C621	8.1 [0.32]
08, 10, 12	202C632	12.7 [0.50]
12, 14, 16	202C642	17.5 [0.69]
16, 18, 20, 22	202C653	22.4 [0.88]
24	202C663	22.9 [0.90]

Catalog 1654025
Revised 3-13

www.te.com

Dimensions are shown for reference purposes only. Specifications subject to change.

Dimensions are in millimeters unless otherwise specified.

USA: +1 800 522 6752
Asia Pacific: +86 0 400 820 6015
UK: +44 800 267 666

For additional support numbers please visit www.te.com

Code 40 MIL-C-38999 Series III and IV (Continued)

Solid Adapters

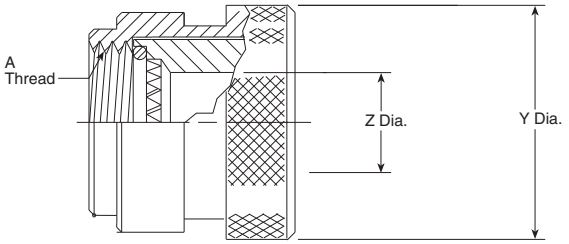

209M3XX-XXX

Table of Dimensions

Order No.	Shell Size Commercial	Military	A Thread	Dimensions Y +.000- .030 (+0.00) (–0.76)	Dimensions Z Dia. Min.
08	9	A	M12 x 1.0	18.26 [.719]	6.35 [.250]
10	11	B	M15 x 1.0	21.44 [.844]	9.52 [.375]
12	13	C	M18 x 1.0	24.61 [.969]	12.70 [.500]
14	15	D	M22 x 1.0	30.91 [1.217]	15.88 [.625]
16	17	E	M25 x 1.0	34.40 [1.354]	19.05 [.750]
18	19	F	M28 x 1.0	37.50 [1.476]	20.62 [.812]
20	21	G	M31 x 1.0	38.89 [1.531]	23.80 [.937]
22	23	H	M34 x 1.0	42.06 [1.656]	26.97 [1.062]
24	25	J	M37 x 1.0	45.24 [1.781]	30.18 [1.188]

Molded Part Selection Guide (Solid)

Order No.	Standard K Parts Straight Part No.	Standard K Parts 90° Part No.	Standard K Parts Cable OD (Min.)	Low-Profile D Parts Straight Part No.	Low-Profile D Parts 90° Part No.	Low-Profile D Parts Cable OD (Min.)
08	202K132	222K132	5.9 [0.23]	202D221	222D221	7.4 [0.29]
10	202K142	222K142	7.1 [0.28]	202D232	222D232	8.4 [0.33]
12, 14	202K153	222K152	8.4 [0.33]	202D242	222D242	9.7 [0.38]
16, 18	202K163	222K163	9.9 [0.39]	202D253	222D253	10.5 [0.41]
20, 22, 24	202K174	222K174	15.7 [0.62]	202D263	222D263	12.2 [0.48]

Uniboot Parts

Order No.	Part No.	Cable OD (Min.)
08	202C621	8.1 [0.32]
10	202C632	12.7 [0.50]
12, 14	202C642	17.5 [0.69]
16, 18, 20, 22	202C653	22.4 [0.88]

Available in:	Americas	Europe	Asia Pacific
	■	■	■

Catalog 1654025
Revised 3-13

www.te.com

Dimensions are shown for reference purposes only. Specifications subject to change.

Dimensions are in millimeters unless otherwise specified.

USA: +1 800 522 6752
Asia Pacific: +86 0 400 820 6015
UK: +44 800 267 666

For additional support numbers please visit www.te.com

Code 40 MIL-C-38999 Series III and IV (Continued)

Spin-Coupling Adapters

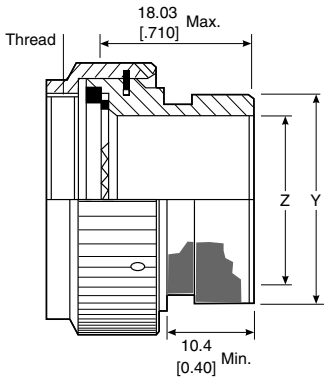

209M4XX-XXX

Table of Dimensions

Order No.	Shell Size Commercial	Military	Thread	Dimensions	
				Y Dia. Max.	Z Dia. Max.
08	9	A	M12 x 1.0	13.54 [0.53]	6.35 [0.25]
10	11	B	M15 x 1.0	15.37 [0.61]	9.52 [0.37]
12	13	C	M18 x 1.0	19.66 [0.77]	12.7 [0.50]
14	15	D	M22 x 1.0	21.29 [0.84]	15.75 [0.62]
16	17	E	M25 x 1.0	24.46 [0.96]	18.92 [0.74]
18	19	F	M28 x 1.0	26.47 [1.04]	20.62 [0.81]
20	21	G	M31 x 1.0	30.91 [1.22]	23.8 [0.94]
22	23	H	M34 x 1.0	34.42 [1.36]	26.97 [1.06]
24	25	J	M37 x 1.0	36.65 [1.44]	29.85 [1.18]

Molded Part Selection Guide (Spin-Coupling)

Order No.	Standard K Parts			Low-Profile D Parts		
	Straight Part No.	90° Part No.	Cable OD (Min.)	Straight Part No.	90° Part No.	Cable OD (Min.)
03, 08	202W232	—	4.3 [0.19]	—	—	—
03, 08	202K121	222K121	5.6 [0.22]	202D211	222D211	6.4 [0.25]
10, 11	202K132	222K132	5.9 [0.23]	202D221	222D221	7.4 [0.29]
12, 14	202K142	222K142	7.1 [0.28]	202D232	222D232	8.4 [0.33]
16, 18	202K153	222K152	8.4 [0.33]	202D242	222D242	9.7 [0.38]
20, 22	202K163	222K163	9.9 [0.39]	202D253	222D253	10.5 [0.41]
24, 28	202K174	222K174	15.7 [0.62]	202D263	222D263	12.2 [0.48]
32, 36	202K185	222K185	16.8 [0.66]	—	—	—

Uniboot Parts

Order No.	Part No.	Cable OD (Min.)
03, 08	202C611	4.8 [0.19]
10, 11, 12	202C621	8.1 [0.32]
14, 16	202C632	12.7 [0.50]
18, 20	202C642	17.5 [0.69]
22, 24	202C653	22.4 [0.88]

Available in:	Americas	Europe	Asia Pacific
	■	■	■

Catalog 1654025
Revised 3-13

www.te.com

Dimensions are shown for reference purposes only. Specifications subject to change.

Dimensions are in millimeters unless otherwise specified.

USA: +1 800 522 6752
Asia Pacific: +86 0 400 820 6015
UK: +44 800 267 666

For additional support numbers please visit www.te.com

Code 40 MIL-C-38999 Series III and IV (Continued)

Tinel-Lock Adapters

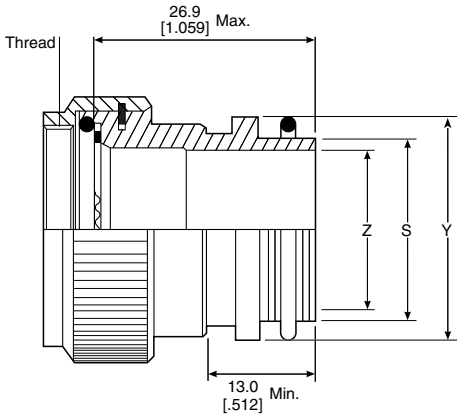

TXR40XX00-XXXXXX

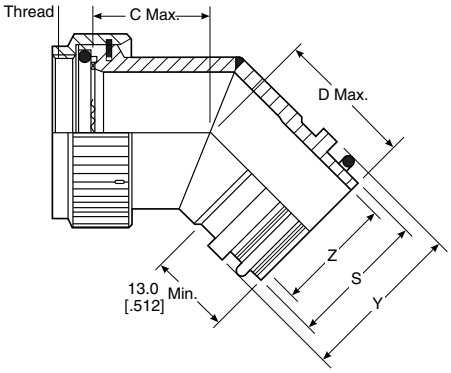

TXR40XX45-XXXXXX

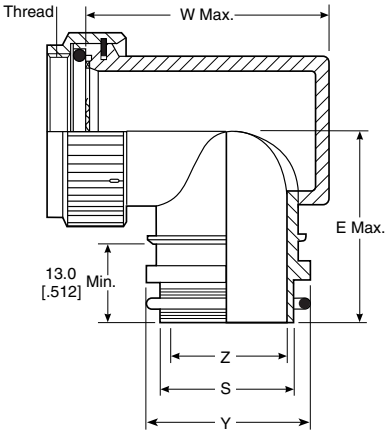

TXR40XX90-XXXXXX

Table of Dimensions

Order No.	Shell Size Commercial	Military	Max. Entry* Size Type 1	Thread	Dimensions		
					C Max.	D Max.	E Max.
08	9	A	04	M12 x 1.0	20.8 [0.82]	22.6 [0.89]	27.9 [1.10]
10	11	B	07	M15 x 1.0	21.3 [0.84]	23.4 [0.92]	30.5 [1.20]
12	13	C	08	M18 x 1.0	22.1 [0.87]	24.1 [0.95]	32.0 [1.26]
14	15	D	10	M2 x 1.0	22.6 [0.89]	24.1 [0.95]	34.0 [1.34]
16	17	E	12	M25 x 1.0	23.4 [0.92]	24.9 [0.98]	35.6 [1.40]
18	19	F	14	M28 x 1.0	24.1 [0.95]	25.7 [1.01]	36.8 [1.45]
20	21	G	16	M31 x 1.0	24.6 [0.97]	26.4 [1.04]	38.4 [1.51]
22	23	H	18	M34 x 1.0	25.4 [1.00]	27.2 [1.07]	39.9 [1.57]
24	25	J	20	M37 x 1.0	25.9 [1.02]	27.2 [1.07]	42.4 [1.67]

*For larger than maximum type 1 entry sizes, a two-piece adapter will be supplied. Contact TE for information.

Available in:	Americas	Europe	Asia Pacific
	■	■	■

Catalog 1654025
Revised 3-13

www.te.com

Dimensions are shown for reference purposes only. Specifications subject to change.

Dimensions are in millimeters unless otherwise specified.

USA: +1 800 522 6752
Asia Pacific: +86 0 400 820 6015
UK: +44 800 267 666

For additional support numbers please visit www.te.com

Code 40 MIL-C-38999 Series III and IV (Continued)

Tinel-Lock Adapters
(continued)

Entry Size Dimensions

Entry Size	Dimensions			
	Z +0.25–0.5	S Diameter (Min.–Max.)	Y Dia.	W Max.
04	6.35 [0.25]	9.39–9.56 [0.37–0.38]	13.97 [0.55]	31.2 [1.23]
05	7.92 [0.31]	10.97–11.13 [0.43–0.44]	15.54 [0.61]	32.8 [1.29]
06	9.52 [0.37]	12.57–12.73 [0.49–0.50]	17.14 [0.67]	34.3 [1.35]
07	11.09 [0.44]	14.12–14.31 [0.55–0.56]	18.71 [0.74]	36.1 [1.42]
08	12.7 [0.50]	15.72–15.91 [0.62–0.63]	20.32 [0.80]	37.6 [1.48]
10	15.87 [0.62]	18.84–19.11 [0.74–0.75]	23.49 [0.92]	40.6 [1.60]
12	19.05 [0.75]	22.02–22.28 [0.87–0.88]	26.67 [1.05]	43.9 [1.73]
14	22.23 [0.88]	25.17–25.46 [0.99–1.00]	29.84 [1.17]	47.0 [1.85]
16	25.4 [1.00]	28.34–28.63 [1.12–1.13]	33.02 [1.30]	50.8 [2.00]
18	28.57 [1.12]	31.52–31.81 [1.24–1.25]	36.19 [1.42]	54.1 [2.13]
20	31.75 [1.25]	34.69–34.98 [1.37–1.38]	39.37 [1.55]	57.21 [2.25]

Molded Part Selection Guide (Tinel)

Tinel-Lock Entry Size	Standard K Parts			Low-Profile D Parts		
	Straight Part No.	90° Part No.	Cable OD (Min.)	Straight Part No.	90° Part No.	Cable OD (Min.)
04	202K232	—	3.3 [0.1]	—	—	—
04	202W232	—	4.3 [0.2]	—	—	—
04	202K121	222K121	5.6 [0.2]	202D211	222D211	6.4 [0.3]
05, 06	202K132	222K132	5.9 [0.2]	202D221	222D221	7.4 [0.3]
07, 08	202K142	222K142	7.1 [0.3]	202D232	222D232	8.4 [0.3]
10, 12	202K153	222K152	8.4 [0.3]	202D242	222D242	9.7 [0.4]
14, 16	202K163	222K163	9.9 [0.4]	202D253	222D253	10.5 [0.4]
18, 20, 22	202K174	222K174	15.7 [0.6]	202D263	222D263	12.2 [0.5]
24	202K185	222K185	16.8 [0.7]	—	—	—

Uniboot Parts

Tinel-Lock Entry Size	Part No.	Cable OD (Min.)
04	202C611	4.8 [0.19]
05, 06, 07	202C621	8.1 [0.32]
08, 10, 12	202C632	12.7 [0.50]
12, 14, 16	202C642	17.5 [0.69]
16, 18, 20, 22	202C653	22.4 [0.88]
24	202C663	22.9 [0.90]

Catalog 1654025
Revised 3-13

www.te.com

Dimensions are shown for reference purposes only. Specifications subject to change.

Dimensions are in millimeters unless otherwise specified.

USA: +1 800 522 6752
Asia Pacific: +86 0 400 820 6015
UK: +44 800 267 666

For additional support numbers please visit www.te.com

Code 40 MIL-C-38999 Series III and IV (Continued)

CRES-Lock Adapters (USA)
BND Adapters (Europe)

Code 40 Band Strap Adapter

Notes:
1. This product is designed to terminate a braided cable shield by means of a band strap and a heat shrinkable lipped boot to a connector.
2. See CH00-0250-016 for ordering information, modifications and additional dimensions.
3. See drawing BND-XX25S for band strap dimensions and information.
4. Adapter to be permanently marked with code identification number and full part number (e.g. 06090-BND40AB00-1814). Band strap shall bear no part marking.
5. All entry sizes are shown in Table II. Maximum entry sizes are as shown in Table I. For larger entry sizes than the maximum, a Type II adapter may be supplied. See CH00-0250-016 for further details.
6. Adapter mates to: MIL-C-38999 Series III and IV, Class C, F, K and W, D38999/20, /24, /26, /40, /46 and /47 Connectors. When so mated it shall provide a water-tight seal meeting the requirements of MIL-C-85049, paragraph 3.5.7.
7. Coupling nut shall have 3 lock wire holes 120° apart.

For additional codes available, contact TE.

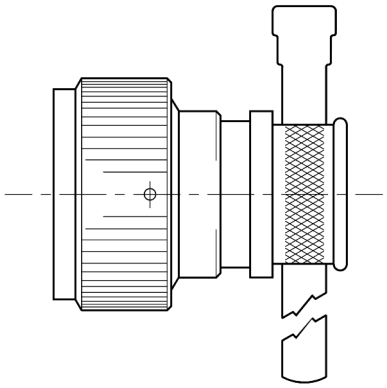

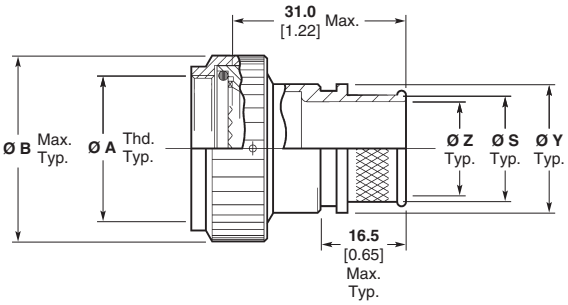

Straight Adapter
Code 00

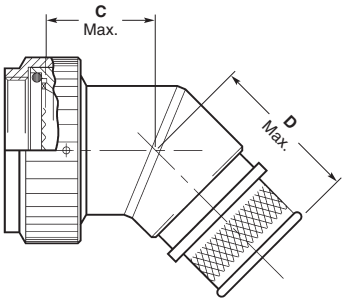

45° Adapter
Code 45

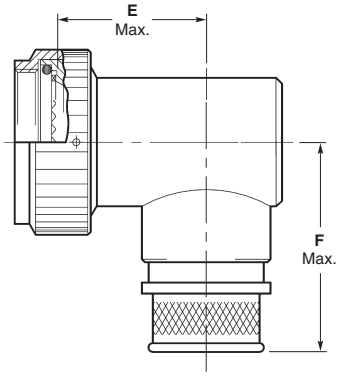

90° Adapter
Code 90

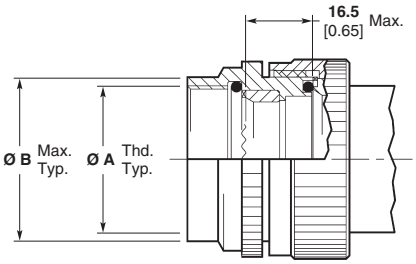

Type II Modification
(See Note 5)

Available in:	Americas	Europe	Asia Pacific
	■	■	■

Catalog 1654025
Revised 3-13

www.te.com

Dimensions are shown for reference purposes only. Specifications subject to change.

Dimensions are in millimeters unless otherwise specified.

USA: +1 800 522 6752
Asia Pacific: +86 0 400 820 6015
UK: +44 800 267 666

For additional support numbers please visit www.te.com

Code 40 MIL-C-38999 Series III and IV (Continued)

CRES-Lock Adapters (USA) BND Adapters (Europe) (continued)

Code 40 Band Strap Adapter (Continued)

Table I

Order Number	Shell Size[2] Com.	Shell Size[2] MIL	Entry Size Max. Type I[1]	Ø A Metric Thread Class 2B	Ø B Max.	Ø B Max.[3]	C Max.	D Max.	F Max.
8	9	A	04	M12 x 1.0	**19.1** 0.75	**24.6** 0.97	**20.8** 0.82	**26.7** 1.05	**32.0** 1.26
10	11	B	07	M15 x 1.0	**21.6** 0.85	**27.0** 1.06	**21.3** 0.84	**27.4** 1.08	**34.5** 1.36
12	13	C	09	M18 x 1.0	**25.4** 1.00	**31.0** 1.22	**22.1** 0.87	**28.2** 1.11	**36.1** 1.42
14	15	D	10	M22 x 1.0	**29.2** 1.15	**35.8** 1.41	**22.6** 0.89	**28.2** 1.11	**38.1** 1.50
16	17	E	12	M25 x 1.0	**31.8** 1.25	**37.3** 1.47	**23.4** 0.92	**29.0** 1.14	**39.6** 1.56
18	19	F	14	M28 x 1.0	**35.6** 1.40	**40.6** 1.60	**24.1** 0.95	**29.7** 1.17	**40.9** 1.61
20	21	G	16	M31 x 1.0	**38.1** 1.50	**44.5** 1.75	**24.6** 0.97	**30.5** 1.20	**42.4** 1.67
22	23	H	18	M34 x 1.0	**41.9** 1.65	**47.0** 1.85	**25.4** 1.00	**31.3** 1.23	**43.9** 1.73
24	25	J	20	M37 x 1.0	**44.5** 1.75	**51.6** 2.03	**25.9** 1.02	**31.3** 1.23	**46.5** 1.83

1. All entry sizes are shown in Table II. Maximum entry sizes are as shown in Table I. For larger entry sizes than the maximum, a Type II adapter may be supplied. See CH00-0250-016 for further details.
2. Adapter mates to: MIL-C-38999 Series III and IV, Class C, F, K and W, D38999/20, /24, /26, /40, /46 and /47 Connectors. When so mated it shall provide a water-tight seal meeting the requirements of MIL-C-85049, paragraph 3.5.7.
3. These dimensions apply if a self-locking coupling nut is used, modification code “S”.

Table II

Entry Size	Ø Z +0.25/-0.50 [+0.010/-0.020]	Ø S ±0.51 [±0.020]	Ø Y ±0.38 [±0.015]	E Max.
03	**4.75** 0.188	**7.92** 0.312	**11.10** 0.438	**15.8** 0.62
04	**6.35** 0.250	**9.52** 0.375	**12.70** 0.500	**16.3** 0.64
05	**7.92** 0.312	**11.12** 0.438	**14.30** 0.563	**16.8** 0.66
06	**9.52** 0.375	**12.70** 0.500	**15.88** 0.625	**17.8** 0.70
07	**11.12** 0.438	**14.30** 0.562	**17.50** 0.689	**18.3** 0.72
08	**12.70** 0.500	**15.88** 0.625	**19.05** 0.750	**19.8** 0.78
09	**14.30** 0.562	**17.50** 0.688	**20.65** 0.813	**21.3** 0.84
10	**15.88** 0.625	**19.05** 0.750	**22.23** 0.875	**22.4** 0.88
11	**17.50** 0.688	**20.65** 0.812	**23.80** 0.938	**22.9** 0.90
12	**19.05** 0.750	**22.23** 0.875	**25.40** 1.000	**23.4** 0.92
13	**20.65** 0.812	**23.83** 0.938	**27.00** 1.063	**24.4** 0.96
14	**22.23** 0.875	**25.40** 1.000	**30.16** 1.189	**25.4** 1.00

Table II (Continued)

Entry Size	Ø Z +0.25/-0.50 [+0.010/-0.020]	Ø S ±0.51 [±0.020]	Ø Y ±0.38 [±0.015]	E Max.
15	**23.83** .0938	**27.00** 1.062	**31.75** 1.250	**25.4** 1.00
16	**25.40** 1.000	**28.58** 1.125	**33.34** 1.313	**26.4** 1.04
18	**28.58** 1.125	**31.75** 1.250	**36.51** 1.438	**27.7** 1.09
20	**31.75** 1.250	**34.90** 1.375	**39.69** 1.563	**29.2** 1.15
22	**34.90** 1.375	**38.10** 1.500	**42.86** 1.688	N/A
24	**38.10** 1.500	**41.28** 1.625	**46.83** 1.844	N/A
26	**41.28** 1.625	**44.45** 1.750	**49.61** 1.953	N/A
28	**44.45** 1.750	**47.63** 1.875	**52.78** 2.078	N/A
30	**47.65** 1.875	**50.80** 2.000	**56.36** 2.219	N/A
32	**50.80** 2.000	**54.00** 2.125	**59.53** 2.344	N/A
34	**54.00** 2.125	**57.15** 2.250	**62.71** 2.469	N/A

Dimensions are shown for reference purposes only. Specifications subject to change.

Dimensions are in millimeters unless otherwise specified.

USA: +1 800 522 6752
Asia Pacific: +86 0 400 820 6015
UK: +44 800 267 666

For additional support numbers please visit www.te.com

Code 41 MIL-C-38999 Series I and II

Braided Adapters

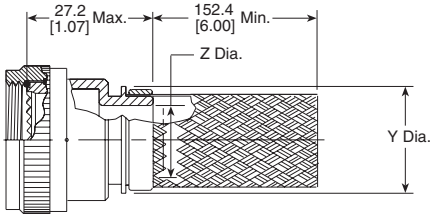

204M0XX-XXXXX

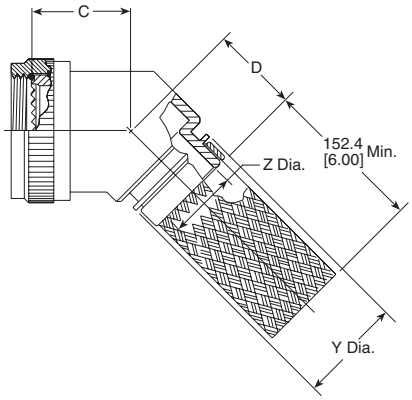

204M1XX-XXXXX

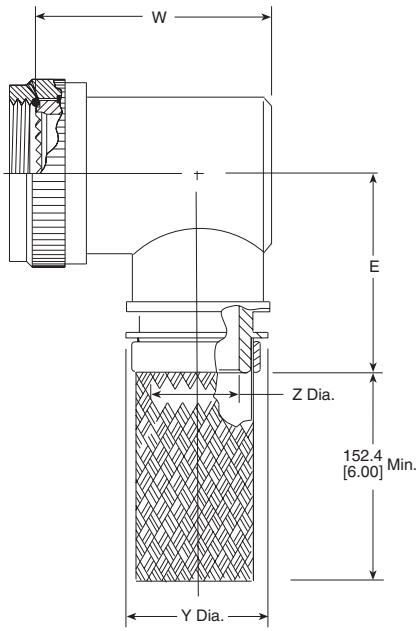

204M2XX-XXXXX

Table of Dimensions

Order No.	Shell Size		Max. Entry* Size Type 1	A Unified Thread Class 2B	Dimensions		
	Series I	Series II			C Max.	D Max.	E Max.
08	9	8	04	.438-28 UNEF	19.8 [0.78]	23.1 [0.91]	29.2 [1.15]
10	11	10	06	.562-24 UNEF	20.3 [0.80]	23.6 [0.93]	30.7 [1.21]
12	13	12	08	.688-24 UNEF	21.1 [0.83]	24.4 [0.96]	32.5 [1.28]
14	15	14	10	.812-20 UNEF	21.6 [0.85]	24.9 [0.98]	34.0 [1.34]
16	17	16	12	.938-20 UNEF	22.4 [0.88]	25.4 [1.00]	35.6 [1.40]
18	19	18	13	1.062-18 UNEF	22.9 [0.90]	26.2 [1.03]	37.1 [1.46]
20	21	20	15	1.188-18 UNEF	23.6 [0.93]	26.9 [1.06]	38.9 [1.53]
22	23	22	16	1.312-18 UNEF	24.4 [0.96]	27.4 [1.08]	40.4 [1.59]
24	25	24	18	1.438-18 UNEF	24.9 [0.98]	28.2 [1.11]	41.9 [1.65]

*For larger than maximum type 1 entry sizes, a two-piece adapter will be supplied.
Contact TE for information.

Available in:	Americas	Europe	Asia Pacific
	■	■	■

Catalog 1654025
Revised 3-13

www.te.com

Dimensions are shown for reference purposes only. Specifications subject to change.

Dimensions are in millimeters unless otherwise specified.

USA: +1 800 522 6752
Asia Pacific: +86 0 400 820 6015
UK: +44 800 267 666

For additional support numbers please visit www.te.com

Code 41 MIL-C-38999 Series I and II (Continued)

Braided Adapters
(continued)

Entry Size Dimensions

Entry Size	Dimensions		
	Z ±0.020 (±0.51)	Y Dia. Min.	W Max.
03	4.75 [.187]	9.98 [.393]	27.2 [1.07]
04	6.35 [.250]	11.58 [.456]	27.2 [1.07]
05	7.92 [.312]	13.08 [.515]	28.7 [1.13]
06	9.53 [.375]	14.76 [.581]	30.2 [1.19]
07	11.13 [.438]	16.33 [.643]	31.8 [1.25]
08	12.70 [.500]	17.91 [.705]	33.5 [1.32]
09	14.27 [.562]	17.91 [.705]	36.6 [1.44]
10	15.88 [.625]	21.11 [.831]	36.6 [1.44]
11	17.48 [.688]	22.68 [.893]	39.9 [1.57]
12	19.05 [.750]	24.21 [.953]	39.9 [1.57]
13	20.62 [.812]	24.21 [.953]	42.9 [1.69]
14	22.23 [.875]	27.46 [1.081]	42.9 [1.69]
15	23.83 [.938]	29.03 [1.143]	46.2 [1.82]
16	25.40 [1.000]	30.61 [1.205]	46.2 [1.82]
18	28.58 [1.125]	35.08 [1.381]	49.3 [1.94]
20	31.75 [1.250]	38.25 [1.506]	—
22	34.93 [1.375]	41.43 [1.631]	—
24	38.10 [1.500]	44.60 [1.756]	—
28	44.45 [1.750]	50.90 [2.004]	—

Molded Part Selection Guide (Braided)

Tinel-Lock Entry Size	Standard K Parts			Low-Profile D Parts		
	Straight Part No.	90° Part No.	Cable OD (Min.)	Straight Part No.	90° Part No.	Cable OD (Min.)
04	202K232	—	3.3 [0.1]	—	—	—
04	202W232	—	4.3 [0.2]	—	—	—
04	202K121	222K121	5.6 [0.2]	202D211	222D211	6.4 [0.3]
05, 06	202K132	222K132	5.9 [0.2]	202D221	222D221	7.4 [0.3]
07, 08	202K142	222K142	7.1 [0.3]	202D232	222D232	8.4 [0.3]
10, 12	202K153	222K152	8.4 [0.3]	202D242	222D242	9.7 [0.4]
14, 16	202K163	222K163	9.9 [0.4]	202D253	222D253	10.5 [0.4]
18, 20, 22	202K174	222K174	15.7 [0.6]	202D263	222D263	12.2 [0.5]
24	202K185	222K185	16.8 [0.7]	—	—	—

Uniboot Parts

Order No.	Part No.	Cable OD (Min.)
04	202C611	4.8 [0.19]
05, 06, 07	202C621	8.1 [0.32]
08, 10, 12	202C632	12.7 [0.50]
12, 14, 16	202C642	17.5 [0.69]
16, 18, 20, 22	202C653	22.4 [0.88]
24	202C663	22.9 [0.90]

Catalog 1654025
Revised 3-13

www.te.com

Dimensions are shown for reference purposes only. Specifications subject to change.

Dimensions are in millimeters unless otherwise specified.

USA: +1 800 522 6752
Asia Pacific: +86 0 400 820 6015
UK: +44 800 267 666

For additional support numbers please visit www.te.com

Code 41 MIL-C-38999 Series I and II (Continued)

Solid Adapters

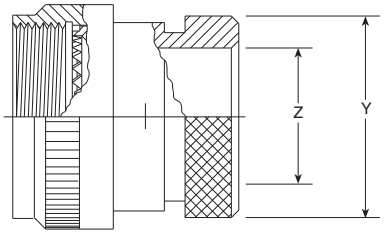

202M1XX-XXX

Table of Dimensions

Order No.	Shell Size Series I	Series II	Thread	Dimensions	
				Y +0.00-0.30 (+0.00) (-0.76) dia.	Z min.
08	9	8	.438-28 UNEF	18.26 [.719]	6.71 [.264]
10	11	10	.562-24 UNEF	21.44 [.844]	9.96 [.392]
12	13	12	.688-24 UNEF	24.61 [.969]	12.85 [.506]
14	15	14	.812-20 UNEF	27.79 [1.094]	16.03 [.631]
16	17	16	.938-20 UNEF	32.54 [1.281]	19.20 [.756]
18	19	18	1.062-18 UNEF	35.71 [1.406]	21.44 [.844]
20	21	20	1.188-18 UNEF	38.89 [1.531]	24.64 [.970]
22	23	22	1.312-18 UNEF	42.06 [1.656]	27.79 [1.094]
24	25	24	1.438-18 UNEF	45.24 [1.781]	30.71 [1.209]

Molded Part Selection Guide (Solid)

Order No.	Standard K Parts			Low-Profile D Parts		
	Straight Part No.	90° Part No.	Cable OD (Min.)	Straight Part No.	90° Part No.	Cable OD (Min.)
08	202K132	222K132	5.9 [0.23]	202D221	222D221	7.4 [0.29]
10	202K142	222K142	7.1 [0.28]	202D232	222D232	8.4 [0.33]
12, 14	202K153	222K152	8.4 [0.33]	202D242	222D242	9.7 [0.38]
16, 18	202K163	222K163	9.9 [0.39]	202D253	222D253	10.5 [0.41]
20, 22, 24	202K174	222K174	15.7 [0.62]	202D263	222D263	12.2 [0.48]

Uniboot Parts

Order No.	Part No.	Cable OD (Min.)
08	202C621	8.1 [0.32]
10	202C632	12.7 [0.50]
12, 14	202C642	17.5 [0.69]
16, 18, 20, 22	202C653	22.4 [0.88]

Available in:	Americas	Europe	Asia Pacific
	■	■	■

Catalog 1654025
Revised 3-13

www.te.com

Dimensions are shown for reference purposes only. Specifications subject to change.

Dimensions are in millimeters unless otherwise specified.

USA: +1 800 522 6752
Asia Pacific: +86 0 400 820 6015
UK: +44 800 267 666

For additional support numbers please visit www.te.com

Code 41 MIL-C-38999 Series I and II (Continued)

Spin-Coupling Adapters

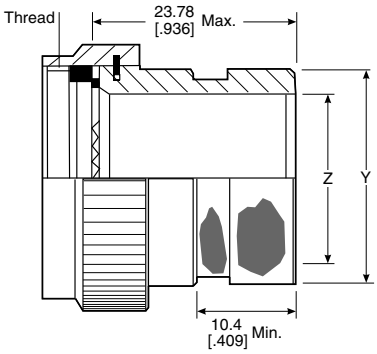

202M2XX-XXX

Table of Dimensions

Order No.	Shell Size Series I	Series II	Thread	Dimensions	
				Y +0.00-0.76 Dia.	Z Min.
08	9	8	.438-28 UNEF	13.54 [0.53]	6.35 [0.25]
10	11	10	.562-24 UNEF	15.37 [0.61]	9.53 [0.38]
12	13	12	.688-24 UNEF	19.66 [0.77]	12.70 [0.50]
14	15	14	.812-20 UNEF	21.29 [0.84]	15.88 [0.63]
16	17	16	.938-20 UNEF	24.46 [0.96]	19.05 [0.75]
18	19	18	1.062-18 UNEF	26.47 [1.04]	20.62 [0.81]
20	21	20	1.188-18 UNEF	30.91 [1.22]	23.80 [0.94]
22	23	22	1.312-18 UNEF	34.42 [1.36]	26.97 [1.06]
24	25	24	1.438-18 UNEF	36.65 [1.44]	30.18 [1.19]

Molded Part Selection Guide (Spin-Coupling)

Order No.	Standard K Parts			Low-Profile D Parts		
	Straight Part No.	90° Part No.	Cable OD (Min.)	Straight Part No.	90° Part No.	Cable OD (Min.)
08	202W232	—	4.3 [0.19]	—	—	—
08	202K121	222K121	5.6 [0.22]	202D211	222D211	6.4 [0.25]
10	202K132	222K132	5.9 [0.23]	202D221	222D221	7.4 [0.29]
12, 14	202K142	222K142	7.1 [0.28]	202D232	222D232	8.4 [0.33]
16, 18	202K153	222K152	8.4 [0.33]	202D242	222D242	9.7 [0.38]
20, 22	202K163	222K163	9.9 [0.39]	202D253	222D253	10.5 [0.41]
24, 28	202K174	222K174	15.7 [0.62]	202D263	222D263	12.2 [0.48]

Uniboot Parts

Order No.	Part No.	Cable OD (Min.)
08	202C611	4.8 [0.19]
10, 12	202C621	8.1 [0.32]
14, 16	202C632	12.7 [0.50]
18, 20	202C642	17.5 [0.69]
22, 24	202C653	22.4 [0.88]

Available in:	Americas	Europe	Asia Pacific
	■	■	■

Catalog 1654025
Revised 3-13

www.te.com

Dimensions are shown for reference purposes only. Specifications subject to change.

Dimensions are in millimeters unless otherwise specified.

USA: +1 800 522 6752
Asia Pacific: +86 0 400 820 6015
UK: +44 800 267 666

For additional support numbers please visit www.te.com

Code 41 MIL-C-38999 Series I and II (Continued)

Tinel-Lock Adapters

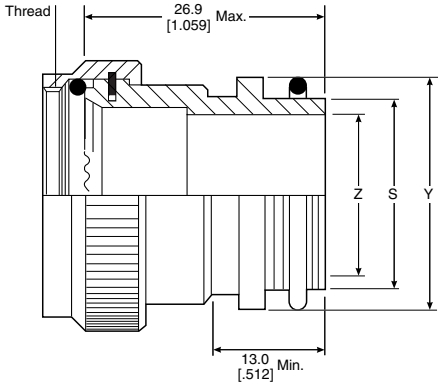

TXR41XX00-XXXXXX

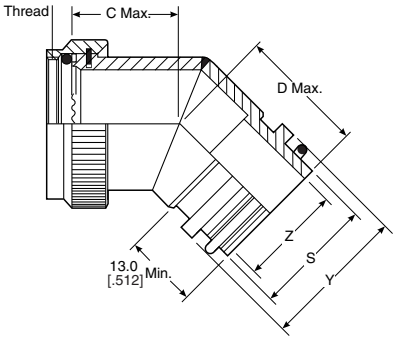

TXR41XX45-XXXXXX

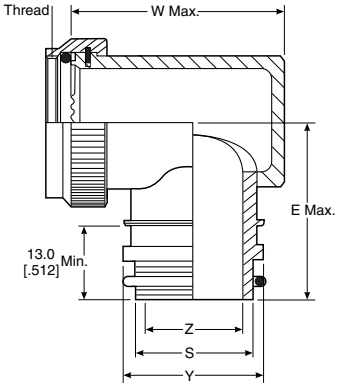

TXR41XX90-XXXXXX

Table of Dimensions

Order No.	Shell Size Series I	Series II	Max. Entry* Size Type 1	A Unified Thread Class 2B	Dimensions		
					C Max.	D Max.	E Max.
08	9	8	—	.438-28 UNEF	17.5 [0.69]	23.1 [0.91]	29.2 [1.15]
10	11	10	—	.562-24 UNEF	18.3 [0.72]	23.6 [0.93]	30.7 [1.21]
12	13	12	08	.688-24 UNEF	18.8 [0.74]	24.4 [0.96]	32.5 [1.28]
14	15	14	10	.812-20 UNEF	19.3 [0.76]	24.9 [0.98]	34.0 [1.34]
16	17	16	12	.938-20 UNEF	20.1 [0.79]	25.4 [1.00]	35.6 [1.40]
18	19	18	13	1.062-18 UNEF	20.6 [0.81]	26.2 [1.03]	37.1 [1.46]
20	21	20	15	1.188-18 UNEF	21.3 [0.84]	26.9 [1.06]	38.9 [1.53]
22	23	22	16	1.312-18 UNEF	22.1 [0.87]	27.4 [1.08]	40.4 [1.59]
24	25	24	18	1.438-18 UNEF	22.6 [0.89]	28.2 [1.11]	41.9 [1.65]

*For larger than maximum type 1 entry sizes, a two-piece adapter will be supplied. Contact TE for information.

Available in:	Americas	Europe	Asia Pacific
	■	■	■

Catalog 1654025
Revised 3-13

www.te.com

Dimensions are shown for reference purposes only. Specifications subject to change.

Dimensions are in millimeters unless otherwise specified.

USA: +1 800 522 6752
Asia Pacific: +86 0 400 820 6015
UK: +44 800 267 666

For additional support numbers please visit www.te.com

Code 41 MIL-C-38999 Series I and II (Continued)

Tinel-Lock Adapters
(continued)

Entry Size Dimensions

Entry Size	Dimensions			
	Z +0.25–0.5	S Diameter (Min.–Max.)	Y ±0.38	W Max.
04	6.35 [0.25]	9.39–9.56 [0.37–0.38]	13.97 [0.55]	27.2 [1.07]
05	7.92 [0.31]	10.97–11.13 [0.43–0.44]	15.54 [0.61]	28.7 [1.13]
06	9.52 [0.37]	12.57–12.73 [0.49–0.50]	17.14 [0.67]	30.2 [1.19]
07	11.09 [0.44]	14.12–14.31 [0.55–0.56]	18.71 [0.74]	31.8 [1.25]
08	12.70 [0.50]	15.72–15.91 [0.62–0.63]	20.32 [0.80]	33.5 [1.32]
10	15.87 [0.62]	18.84–19.11 [0.74–0.75]	23.49 [0.92]	36.6 [1.44]
12	19.05 [0.75]	22.02–22.28 [0.87–0.88]	26.67 [1.05]	39.9 [1.57]
14	22.23 [0.88]	25.17–25.46 [0.99–1.00]	29.84 [1.17]	42.9 [1.69]
16	25.4 [1.00]	28.34–28.63 [1.12–1.13]	33.02 [1.30]	46.2 [1.82]
18	28.57 [1.12]	31.52–31.81 [1.24–1.25]	36.19 [1.42]	49.3 [1.94]

Molded Part Selection Guide (Tinel)

Order No.	Standard K Parts			Low-Profile D Parts		
	Straight Part No.	90° Part No.	Cable OD (Min.)	Straight Part No.	90° Part No.	Cable OD (Min.)
04	202K232	—	3.3 [0.1]	—	—	—
04	202W232	—	4.3 [0.2]	—	—	—
04	202K121	222K121	5.6 [0.2]	202D211	222D211	6.4 [0.3]
05, 06	202K132	222K132	5.9 [0.2]	202D221	222D221	7.4 [0.3]
07, 08	202K142	222K142	7.1 [0.3]	202D232	222D232	8.4 [0.3]
10, 12	202K153	222K152	8.4 [0.3]	202D242	222D242	9.7 [0.4]
14, 16	202K163	222K163	9.9 [0.4]	202D253	222D253	10.5 [0.4]
18, 20, 22	202K174	222K174	15.7 [0.6]	202D263	222D263	12.2 [0.5]
24	202K185	222K185	16.8 [0.7]	—	—	—

Uniboot Parts

Order No.	Part No.	Cable OD (Min.)
04	202C611	4.8 [0.19]
05, 06, 07	202C621	8.1 [0.32]
08, 10, 12	202C632	12.7 [0.50]
12, 14, 16	202C642	17.5 [0.69]
16, 18, 20, 22	202C653	22.4 [0.88]
24	202C663	22.9 [0.90]

Catalog 1654025
Revised 3-13

www.te.com

Dimensions are shown for reference purposes only. Specifications subject to change.

Dimensions are in millimeters unless otherwise specified.

USA: +1 800 522 6752
Asia Pacific: +86 0 400 820 6015
UK: +44 800 267 666

For additional support numbers please visit www.te.com

Code 41 MIL-C-38999 Series I and II (Continued)

CRES-Lock Adapters (USA)
BND Adapters (Europe)

Code 41 Band Strap Adapter

Notes:
1. This product is designed to terminate a braided cable shield by means of a band strap and a heat shrinkable lipped boot to a connector.
2. See CH00-0250-016 for ordering information, modifications and additional dimensions.
3. See drawing BND-XX25S for band strap dimensions and information.
4. Adapter to be permanently marked with code identification number and full part number (e.g. 06090-BND41AB00-1812). Band strap shall bear no part marking.
5. All entry sizes are shown in Table II. Maximum entry sizes are as shown in Table I. For larger entry sizes than the maximum, a Type II adapter may be supplied. See CH00-0250-016 for further details.
6. Adapter mates to: MIL-C-38999 Series I and II, Class E and T, MS27466, MS27467, MS27468, MS27472, MS27473, MS27474, MS27479, MS27480, MS27481, MS27484, MS27497, MS27652, MS27653 and MS27656 Connectors.

For additional codes available, contact TE.

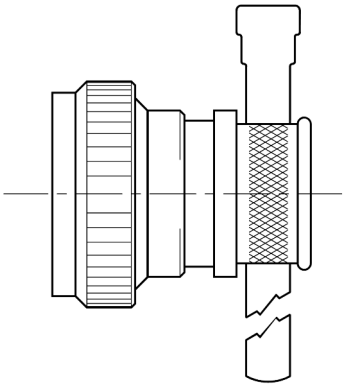

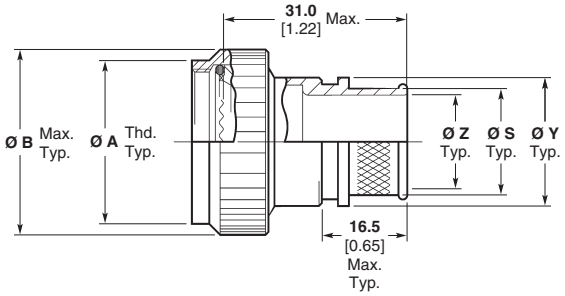

Straight Adapter
Code 00

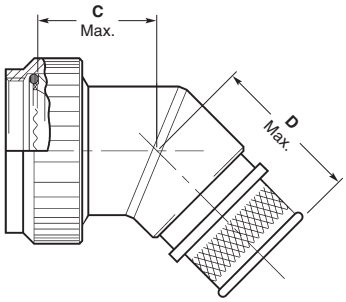

45° Adapter
Code 45

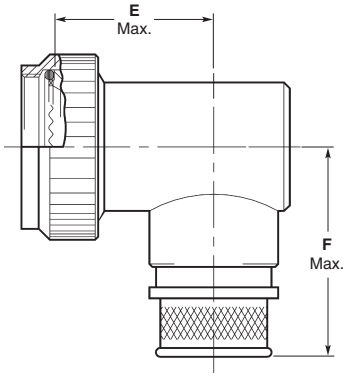

90° Adapter
Code 90

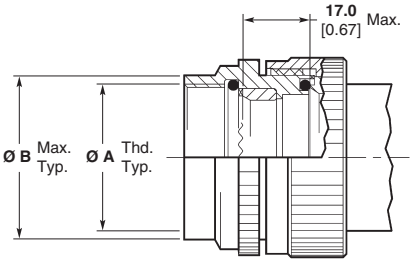

Type II Modification
(See Note 5)

Available in:	Americas	Europe	Asia Pacific
	■	■	■

Catalog 1654025
Revised 3-13

www.te.com

Dimensions are shown for reference purposes only. Specifications subject to change.

Dimensions are in millimeters unless otherwise specified.

USA: +1 800 522 6752
Asia Pacific: +86 0 400 820 6015
UK: +44 800 267 666

For additional support numbers please visit www.te.com

Code 41 MIL-C-38999 Series I and II (Continued)

CRES-Lock Adapters (USA) BND Adapters (Europe) (continued)

Code 41 Band Strap Adapter (Continued)

Table I

Order Number	Shell Size[2] Series I	Shell Size[2] Series II	Entry Size Max. Type I[1]	Ø A Unified Thread UNEF Class 2B	Ø B Max.	Ø B Max.[3]	C Max.	D Max.	F Max.
08	9	08	04	0.4375–28	**19.1** 0.75	**24.6** 0.97	**17.5** 0.69	**27.2** 1.07	**33.3** 1.31
10	11	10	06	0.5625–24	**20.8** 0.85	**27.0** 1.06	**18.3** 0.72	**27.7** 1.09	**34.8** 1.37
12	13	12	08	0.6875–24	**25.4** 1.00	**31.0** 1.22	**18.8** 0.74	**28.4** 1.12	**36.6** 1.44
14	15	14	10	0.8125–20	**27.2** 1.10	**35.8** 1.41	**19.3** 0.76	**29.0** 1.14	**38.1** 1.50
16	17	16	12	0.9375–20	**31.8** 1.25	**37.3** 1.47	**20.1** 0.79	**29.5** 1.16	**39.6** 1.56
18	19	18	13	1.0625–18	**35.6** 1.40	**40.6** 1.60	**20.6** 0.81	**30.2** 1.19	**41.1** 1.62
20	21	20	15	1.1875–18	**38.1** 1.50	**44.5** 1.75	**21.3** 0.84	**31.0** 1.22	**42.9** 1.69
22	23	22	16	1.3125–18	**41.9** 1.65	**46.8** 1.84	**22.1** 0.87	**31.5** 1.24	**44.5** 1.75
24	25	24	18	1.4375–18	**44.5** 1.75	**51.6** 2.03	**22.6** 0.89	**32.3** 1.27	**46.0** 1.81

1. All entry sizes are shown in Table II. Maximum entry sizes are as shown in Table I. For larger entry sizes than the maximum, a Type II adapter may be supplied. See CH00-0250-016 for further details.
2. Adapter mates to: MIL-C-38999 Series I and II, Class E and T, MS27466, MS27467, MS27468, MS27472, MS27473, MS27474, MS27479, MS27480, MS27481, MS27484, MS27497, MS27652, MS27653 and MS27656 Connectors.
3. These dimensions apply if a self-locking coupling nut is used, modification code “S”.

Table II

Entry Size	Ø Z +0.25/-0.50 [+0.010/-0.020]	Ø S ±0.51 [±0.020]	Ø Y ±0.38 [±0.015]	E Max.
03	**4.75** 0.188	**7.92** 0.312	**11.10** 0.438	**15.3** 0.60
04	**6.35** 0.250	**9.52** 0.375	**12.70** 0.500	**16.3** 0.64
05	**7.92** 0.312	**11.12** 0.438	**14.30** 0.563	**16.8** 0.66
06	**9.52** 0.375	**12.70** 0.500	**15.88** 0.625	**17.8** 0.70
07	**11.12** 0.438	**14.30** 0.562	**17.50** 0.689	**18.8** 0.74
08	**12.70** 0.500	**15.88** 0.625	**19.05** 0.750	**19.3** 0.76
09	**14.30** 0.562	**17.50** 0.688	**20.65** 0.813	**20.3** 0.80
10	**15.88** 0.625	**19.05** 0.750	**22.23** 0.875	**21.3** 0.84
11	**17.50** 0.688	**20.65** 0.812	**23.80** 0.938	**21.8** 0.86
12	**19.05** 0.750	**22.23** 0.875	**25.40** 1.000	**22.9** 0.90
13	**20.65** 0.812	**23.83** 0.938	**27.00** 1.063	**23.8** 0.94
14	**22.23** 0.875	**25.40** 1.000	**30.16** 1.189	**24.4** 0.96

Table II (Continued)

Entry Size	Ø Z +0.25/-0.50 [+0.010/-0.020]	Ø S ±0.51 [±0.020]	Ø Y ±0.38 [±0.015]	E Max.
15	**23.83** .0938	**27.00** 1.062	**31.75** 1.250	**25.4** 1.00
16	**25.40** 1.000	**28.58** 1.125	**33.34** 1.313	**25.9** 1.02
18	**28.58** 1.125	**31.75** 1.250	**36.51** 1.438	**27.4** 1.08
20	**31.75** 1.250	**34.90** 1.375	**39.69** 1.563	N/A
22	**34.90** 1.375	**38.10** 1.500	**42.86** 1.688	N/A
24	**38.10** 1.500	**41.28** 1.625	**46.83** 1.844	N/A
26	**41.28** 1.625	**44.45** 1.750	**49.61** 1.953	N/A
28	**44.45** 1.750	**47.63** 1.875	**52.78** 2.078	N/A
30	**47.65** 1.875	**50.80** 2.000	**56.36** 2.219	N/A
32	**50.80** 2.000	**54.00** 2.125	**59.53** 2.344	N/A
34	**54.00** 2.125	**57.15** 2.250	**62.71** 2.469	N/A

Catalog 1654025
Revised 3-13

www.te.com

Dimensions are shown for reference purposes only. Specifications subject to change.

Dimensions are in millimeters unless otherwise specified.

USA: +1 800 522 6752
Asia Pacific: +86 0 400 820 6015
UK: +44 800 267 666

For additional support numbers please visit www.te.com

Code 54 MIL-C-5015 (MS3400), MIL-C-26482 Series 2, MIL-C-83723 Series I and III, MIL-C-81703 Series III

Braided Adapters

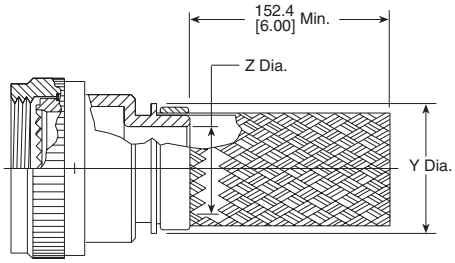

203M0XX-XXXXX

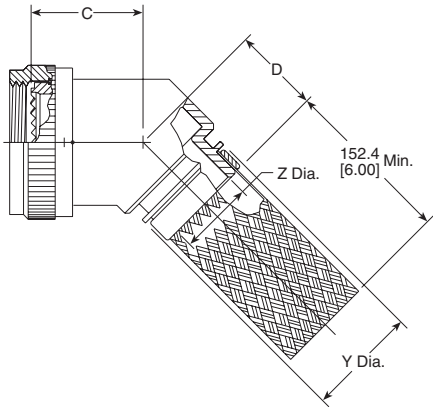

203M1XX-XXXXX

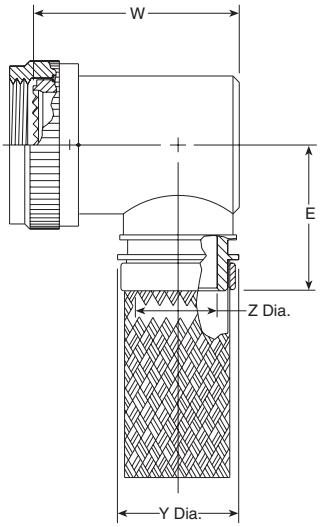

203M2XX-XXXXX

Table of Dimensions

Order No.	Shell Size		Max. Entry Size Type 1*	Thread	Dimensions		
	MIL-C-81703	MIL-C-5015			C Max.	D Max.	E Max.
03	3	—	04	.562-24 UNEF	19.10 [0.75]	23.10 [0.91]	28.70 [1.13]
08	—	8 & 8S	04	.500-20 UNF	19.10 [0.75]	23.10 [0.91]	27.90 [1.10]
10	—	10, 10S & 10 SL	06	.625-24 UNEF	19.60 [0.77]	23.60 [0.93]	29.50 [1.16]
12	7	12 & 12S	08	.750-20 UNEF	20.30 [0.80]	24.10 [0.95]	31.00 [1.22]
14	12	14 & 14S	08	.875-20 UNEF	20.80 [0.82]	24.60 [0.97]	32.50 [1.28]
16	19	16 & 16S	10	1.000-20 UNEF	21.30 [0.84]	25.40 [1.00]	34.30 [1.35]
18	27	18	12	1.062-18 UNEF	21.80 [0.86]	25.70 [1.01]	35.60 [1.40]
20	37	20	14	1.188-18 UNEF	22.40 [0.88]	26.40 [1.04]	37.10 [1.46]
22	—	22	16	1.312-18 UNEF	23.10 [0.91]	26.90 [1.06]	38.90 [1.53]
24	—	24	18	1.438-18 UNEF	23.60 [0.93]	27.70 [1.09]	40.40 [1.59]
28	—	28	22	1.750-18 UNS	24.90 [0.98]	29.20 [1.15]	45.20 [1.78]
32	—	32	24	2.000-18 UNS	26.20 [1.03]	30.50 [1.20]	48.30 [1.90]
36	—	36	24	2.250-16 UN	27.40 [1.08]	31.80 [1.25]	51.60 [2.03]
40	—	40	24	2.500-16 UN	29.00 [1.14]	33.30 [1.31]	54.60 [2.15]
44	—	44	24	2.750-16 UN	30.20 [1.19]	34.50 [1.36]	57.90 [2.28]
48	—	48	24	3.000-16 UN	31.50 [1.24]	35.10 [1.38]	61.00 [2.40]
61	61	—	18	1.500-18 UNEF	23.90 [0.94]	27.90 [1.10]	41.10 [1.62]

*For larger than maximum type 1 entry sizes, a two-piece adapter will be supplied. Contact TE for information.

Available in:	Americas	Europe	Asia Pacific
	■	■	■

Catalog 1654025
Revised 3-13

www.te.com

Dimensions are shown for reference purposes only. Specifications subject to change.

Dimensions are in millimeters unless otherwise specified.

USA: +1 800 522 6752
Asia Pacific: +86 0 400 820 6015
UK: +44 800 267 666

For additional support numbers please visit www.te.com

Code 54 MIL-C-5015 (MS3400), MIL-C-26482 Series 2, MIL-C-83723 Series I and III, MIL-C-81703 Series III (Continued)

Braided Adapters
(continued)

Entry Size Dimensions

Entry Size	Dimensions			
	Z +0.25–0.5	S Diameter (Min.–Max.)	Y ±0.38	W Max.
04	6.35 [0.25]	9.39–9.56 [0.37–0.38]	13.97 [0.55]	28.4 [1.12]
05	7.92 [0.31]	10.97–11.13 [0.43–0.44]	15.54 [0.61]	30.2 [1.19]
06	9.52 [0.37]	12.57–12.73 [0.49–0.50]	17.14 [0.67]	31.8 [1.25]
07	11.09 [0.44]	14.12–14.31 [0.55–0.56]	18.71 [0.74]	33.3 [1.31]
08	12.7 [0.50]	15.72–15.91 [0.62–0.63]	20.32 [0.80]	35.1 [1.38]
10	15.87 [0.62]	18.84–19.11 [0.74–0.75]	23.49 [0.92]	38.1 [1.50]
12	19.05 [0.75]	22.02–22.28 [0.87–0.88]	26.67 [1.05]	41.1 [1.62]
14	22.23 [0.88]	25.17–25.46 [0.99–1.00]	29.84 [1.17]	44.5 [1.75]
16	25.4 [1.00]	28.34–28.63 [1.12–1.13]	33.02 [1.30]	47.8 [1.88]
18	28.57 [1.12]	31.52–31.81 [1.24–1.25]	36.19 [1.42]	50.8 [2.00]
20	31.75 [1.25]	34.69-34.98 [1.37-1.38]	39.37 [1.55]	53.8 [2.12]
22	34.93 [1.38]	37.79-38.15 [1.49-1.50]	42.55 [1.68]	57.2 [2.25]
24	38.1 [1.50]	40.97-41.33 [1.61-1.63]	45.72 [1.80]	60.5 [2.38]

Molded Part Selection Guide (Braided)

Tinel-Lock Entry Size	Standard K Parts			Low-Profile D Parts		
	Straight Part No.	90° Part No.	Cable OD (Min.)	Straight Part No.	90° Part No.	Cable OD (Min.)
04	202K232	—	3.3 [0.1]	—	—	—
04	202W232	—	4.3 [0.2]	—	—	—
04	202K121	222K121	5.6 [0.2]	202D211	222D211	6.4 [0.3]
05, 06	202K132	222K132	5.9 [0.2]	202D221	222D221	7.4 [0.3]
07, 08	202K142	222K142	7.1 [0.3]	202D232	222D232	8.4 [0.3]
10, 12	202K153	222K152	8.4 [0.3]	202D242	222D242	9.7 [0.4]
14, 16	202K163	222K163	9.9 [0.4]	202D253	222D253	10.5 [0.4]
18, 20, 22	202K174	222K174	15.7 [0.6]	202D263	222D263	12.2 [0.5]
24	202K185	222K185	16.8 [0.7]	—	—	—

Uniboot Parts

Tinel-Lock Entry Size	Part No.	Cable OD (Min.)
04	202C611	4.8 [0.19]
05, 06, 07	202C621	8.1 [0.32]
08, 10, 12	202C632	12.7 [0.50]
12, 14, 16	202C642	17.5 [0.69]
16, 18, 20, 22	202C653	22.4 [0.88]
24	202C663	22.9 [0.90]

Catalog 1654025
Revised 3-13

www.te.com

Dimensions are shown for reference purposes only. Specifications subject to change.

Dimensions are in millimeters unless otherwise specified.

USA: +1 800 522 6752
Asia Pacific: +86 0 400 820 6015
UK: +44 800 267 666

For additional support numbers please visit www.te.com

Code 54 MIL-C-5015 (MS3400), MIL-C-26482 Series 2, MIL-C-83723 Series I and III, MIL-C-81703 Series III (Continued)

Solid Adapters

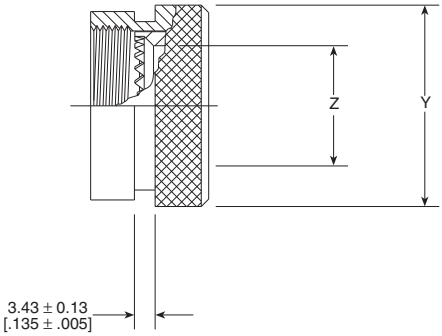

201M9XX-XXX

Table of Dimensions

Order No.	Shell Size		Thread	Dimensions	
	MIL-C-81703	MIL-C-5015		Y +0.00-0.51 Dia.	Z Dia. Min.
03	3	—	.562-24 UNEF	13.54 [0.53]	6.35 [0.25]
08	—	8 & 8S	.500-20 UNF	13.54 [0.53]	6.35 [0.25]
10	—	10, 10S & 10SL	.625-24 UNEF	15.37 [0.61]	9.02 [0.36]
12	7	12 & 12S	.750-20 UNEF	19.66 [0.77]	12.47 [0.49]
14	12	14 & 14S	.875-20 UNEF	21.29 [0.84]	14.35 [0.56]
16	19	16 & 16S	1.000-20 UNEF	24.46 [0.96]	17.53 [0.69]
18	27	18	1.062-18 UNEF	26.47 [1.04]	19.53 [0.77]
20	37	20	1.188-18 UNEF	30.91 [1.22]	22.71 [0.89]
22	—	22	1.312-18 UNEF	34.42 [1.36]	25.88 [1.02]
24	—	24	1.438-18 UNEF	36.65 [1.44]	28.80 [1.13]
28	—	28	1.750-18 UNS	43.41 [1.71]	34.77 [1.37]
32	—	32	2.000-18 UNS	48.74 [1.92]	41.02 [1.61]
36	—	36	2.250-16 UN	55.09 [2.17]	46.48 [1.83]
40	—	40	2.500-16 UN	61.01 [2.40]	51.94 [2.04]
44	—	44	2.750-16 UN	67.49 [2.66]	58.42 [2.30]
48	—	48	3.000-16 UN	73.84 [2.91]	64.77 [2.55]
61	61	—	1.500-18 UNEF	36.65 [1.44]	29.82 [1.17]

Molded Part Selection Guide (Solid)

Order No.	Standard K Parts			Low-Profile D Parts		
	Straight Part No.	90° Part No.	Cable OD (Min.)	Straight Part No.	90° Part No.	Cable OD (Min.)
03	202K132	222K132	5.9 [0.23]	202D221	222D221	7.4 [0.29]
10	202K142	222K142	7.1 [0.28]	202D232	222D232	8.4 [0.33]
12, 14	202K153	222K152	8.4 [0.33]	202D242	222D242	9.7 [0.38]
16, 18, 19, 27	202K163	222K163	9.9 [0.39]	202D253	222D253	10.5 [0.41]
20, 22, 24, 28, 37	202K174	222K174	15.7 [0.62]	202D263	222D263	12.2 [0.48]
28, 32	202K185	222K185	16.8 [0.66]	—	—	—

Uniboot Parts

Order No.	Part No.	Cable OD (Min.)
08	202C621	8.1 [0.32]
7, 10, 12	202C632	12.7 [0.50]
12, 14	202C642	17.5 [0.69]
24, 27, 37, 61	202C653	22.4 [0.88]

Available in:	Americas	Europe	Asia Pacific
	■	■	■

Catalog 1654025
Revised 3-13

www.te.com

Dimensions are shown for reference purposes only. Specifications subject to change.

Dimensions are in millimeters unless otherwise specified.

USA: +1 800 522 6752
Asia Pacific: +86 0 400 820 6015
UK: +44 800 267 666

For additional support numbers please visit www.te.com

Code 54 MIL-C-5015 (MS3400), MIL-C-26482 Series 2, MIL-C-83723 Series I and III, MIL-C-81703 Series III (Continued)

Spin-Coupling Adapters

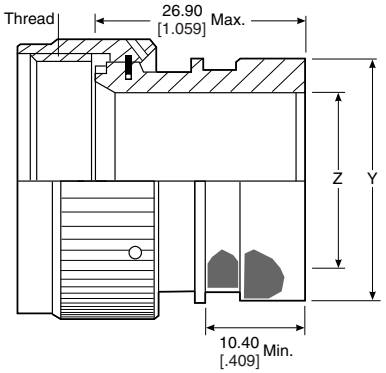

201M1XX-XXX

Table of Dimensions

Order No.	Shell Size		Thread	Dimensions	
	MIL-C-81703	MIL-C-5015		Y +0.00-0.51 Dia.	Z Dia. Min.
03	3	—	.562-24 UNEF	13.54 [0.53]	6.35 [0.25]
08	—	8 & 8S	.500-20 UNF	13.54 [0.53]	6.35 [0.25]
10	—	10, 10S & 10SL	.625-24 UNEF	15.37 [0.61]	9.02 [0.36]
12	7	12 & 12S	.750-20 UNEF	19.66 [0.77]	12.47 [0.49]
14	12	14 & 14S	.875-20 UNEF	21.29 [0.84]	14.35 [0.56]
16	19	16 & 16S	1.000-20 UNEF	24.46 [0.96]	17.53 [0.69]
18	27	18	1.062-18 UNEF	26.47 [1.04]	19.53 [0.77]
20	37	20	1.188-18 UNEF	30.91 [1.22]	22.71 [0.89]
22	—	22	1.312-18 UNEF	34.42 [1.36]	25.88 [1.02]
24	—	24	1.438-18 UNEF	36.65 [1.44]	28.80 [1.13]
28	—	28	1.750-18 UNS	43.41 [1.71]	34.77 [1.37]
32	—	32	2.000-18 UNS	48.74 [1.92]	41.02 [1.61]
36	—	36	2.250-16 UN	55.09 [2.17]	46.48 [1.83]
40	—	40	2.500-16 UN	61.01 [2.40]	51.94 [2.04]
44	—	44	2.750-16 UN	67.49 [2.66]	58.42 [2.30]
48	—	48	3.000-16 UN	73.84 [2.91]	64.77 [2.55]
61	61	—	1.500-18 UNEF	36.65 [1.44]	29.82 [1.17]

Molded Part Selection Guide (Spin-coupling)

Order No.	Standard K Parts			Low-Profile D Parts		
	Straight Part No.	90° Part No.	Cable OD (Min.)	Straight Part No.	90° Part No.	Cable OD (Min.)
03, 08	202W232	—	4.3 [0.19]	—	—	—
03, 08	202K121	222K121	5.6 [0.22]	202D211	222D211	6.4 [0.25]
10, 11	202K132	222K132	5.9 [0.23]	202D221	222D221	7.4 [0.29]
12, 14	202K142	222K142	7.1 [0.28]	202D232	222D232	8.4 [0.33]
16, 18	202K153	222K152	8.4 [0.33]	202D242	222D242	9.7 [0.38]
20, 22	202K163	222K163	9.9 [0.39]	202D253	222D253	10.5 [0.41]
24, 28, 61	202K174	222K174	15.7 [0.62]	202D263	222D263	12.2 [0.48]
32, 36	202K185	222K185	16.8 [0.66]	—	—	—

Uniboot Parts

Order No.	Part No.	Cable OD (Min.)
08	202C621	8.1 [0.32]
7, 10, 12	202C632	12.7 [0.50]
12, 14	202C642	17.5 [0.69]
24, 27, 37, 61	202C653	22.4 [0.88]

Available in:	Americas	Europe	Asia Pacific
	■	■	■

Dimensions are shown for reference purposes only. Specifications subject to change.

Dimensions are in millimeters unless otherwise specified.

USA: +1 800 522 6752
Asia Pacific: +86 0 400 820 6015
UK: +44 800 267 666

For additional support numbers please visit www.te.com

Code 54 MIL-C-5015 (MS3400), MIL-C-26482 Series 2, MIL-C-83723 Series I and III, MIL-C-81703 Series III (Continued)

Tinel-Lock Adapters

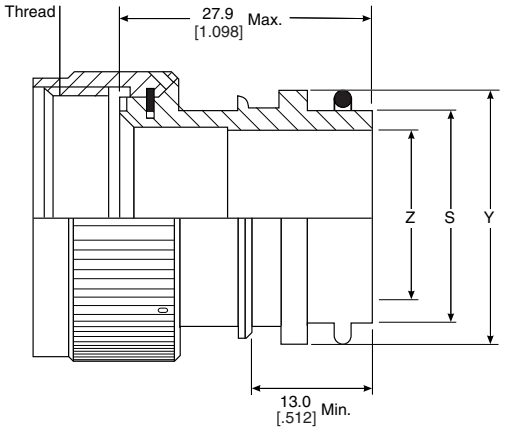

TXR54XX00-XXXXXX

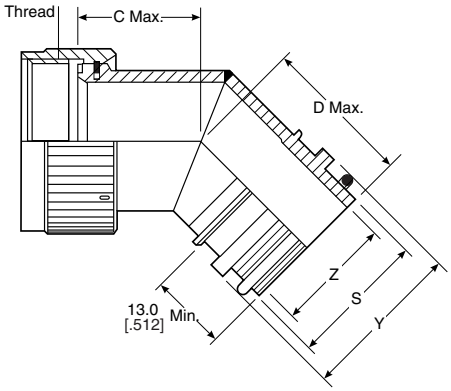

TXR54XX45-XXXXXX

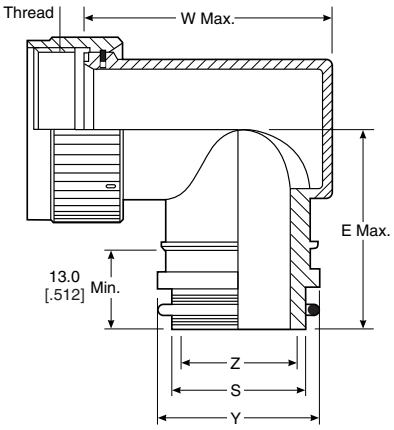

TXR54XX90-XXXXXX

Available in:	Americas	Europe	Asia Pacific
	■	■	■

Catalog 1654025
Revised 3-13

www.te.com

Dimensions are shown for reference purposes only. Specifications subject to change.

Dimensions are in millimeters unless otherwise specified.

USA: +1 800 522 6752
Asia Pacific: +86 0 400 820 6015
UK: +44 800 267 666

For additional support numbers please visit www.te.com

Code 54 MIL-C-5015 (MS3400), MIL-C-26482 Series 2, MIL-C-83723 Series I and III, MIL-C-81703 Series III (Continued)

Tinel-Lock Adapters
(continued)

Table of Dimensions

Order No.	Shell Size MIL-C-81703	Shell Size MIL-C-5015	Max. Entry Size Type 1*	Thread	Dimensions C Max.	Dimensions D Max.	Dimensions E Max.
03	3	—	04	.562-24 UNEF	19.10 [0.75]	23.10 [0.91]	28.70 [1.13]
08	—	8 & 8S	04	.500-20 UNF	19.10 [0.75]	23.10 [0.91]	27.90 [1.10]
10	—	10, 10S & 10 SL	06	.625-24 UNEF	19.60 [0.77]	23.60 [0.93]	29.50 [1.16]
12	7	12 & 12S	08	.750-20 UNEF	20.30 [0.80]	24.10 [0.95]	31.00 [1.22]
14	12	14 & 14S	08	.875-20 UNEF	20.80 [0.82]	24.60 [0.97]	32.50 [1.28]
16	19	16 & 16S	10	1.000-20 UNEF	21.30 [0.84]	25.40 [1.00]	34.30 [1.35]
18	27	18	12	1.062-18 UNEF	21.80 [0.86]	25.70 [1.01]	35.60 [1.40]
20	37	20	14	1.188-18 UNEF	22.40 [0.88]	26.40 [1.04]	37.10 [1.46]
22	—	22	16	1.312-18 UNEF	23.10 [0.91]	26.90 [1.06]	38.90 [1.53]
24	—	24	18	1.438-18 UNEF	23.60 [0.93]	27.70 [1.09]	40.40 [1.59]
28	—	28	22	1.750-18 UNS	24.90 [0.98]	29.20 [1.15]	45.20 [1.78]
32	—	32	24	2.000-18 UNS	26.20 [1.03]	30.50 [1.20]	48.30 [1.90]
36	—	36	24	2.250-16 UN	27.40 [1.08]	31.80 [1.25]	51.60 [2.03]
40	—	40	24	2.500-16 UN	29.00 [1.14]	33.30 [1.31]	54.60 [2.15]
44	—	44	24	2.750-16 UN	30.20 [1.19]	34.50 [1.36]	57.90 [2.28]
48	—	48	24	3.000-16 UN	31.50 [1.24]	35.10 [1.38]	61.00 [2.40]
61	61	—	18	1.500-18 UNEF	23.90 [0.94]	27.90 [1.10]	41.10 [1.62]

*For larger than maximum type 1 entry sizes, a two-piece adapter will be supplied. Contact TE for information.

Entry Size Dimensions

Entry Size	Dimensions Z +0.25–0.5	Dimensions S Diameter (Min.–Max.)	Dimensions Y ±0.38	Dimensions W Max.
04	6.35 [0.25]	9.39—9.56 [0.37—0.38]	13.97 [0.55]	28.4 [1.12]
05	7.92 [0.31]	10.97—11.13 [0.43—0.44]	15.54 [0.61]	30.2 [1.19]
06	9.52 [0.37]	12.57—12.73 [0.49—0.50]	17.14 [0.67]	31.8 [1.25]
07	11.09 [0.44]	14.12—14.31 [0.55—0.56]	18.71 [0.74]	33.3 [1.31]
08	12.70 [0.50]	15.72—15.91 [0.62—0.63]	20.32 [0.80]	35.1 [1.38]
10	15.87 [0.62]	18.84—19.11 [0.74—0.75]	23.49 [0.92]	38.1 [1.50]
12	19.05 [0.75]	22.02—22.28 [0.87—0.88]	26.67 [1.05]	41.1 [1.62]
14	22.23 [0.88]	25.17—25.46 [0.99—1.00]	29.84 [1.17]	44.5 [1.75]
16	25.40 [1.00]	28.34—28.63 [1.12—1.13]	33.02 [1.30]	47.8 [1.88]
18	28.57 [1.12]	31.52—31.81 [1.24—1.25]	36.19 [1.42]	50.8 [2.00]
20	31.75 [1.25]	34.69-34.98 [1.37-1.38]	39.37 [1.55]	53.8 [2.12]
22	34.93 [1.38]	37.79-38.15 [1.49-1.50]	42.55 [1.68]	57.2 [2.25]
24	38.10 [1.50]	40.97-41.33 [1.61-1.63]	45.72 [1.80]	60.5 [2.38]

Molded Part Selection Guide (Tinel)

Tinel-Lock Entry Size	Standard K Parts Straight Part No.	Standard K Parts 90° Part No.	Standard K Parts Cable OD (Min.)	Low-Profile D Parts Straight Part No.	Low-Profile D Parts 90° Part No.	Low-Profile D Parts Cable OD (Min.)
04	202K232	—	3.3 [0.1]	—	—	—
04	202W232	—	4.3 [0.2]	—	—	—
04	202K121	222K121	5.6 [0.2]	202D211	222D211	6.4 [0.3]
05, 06	202K132	222K132	5.9 [0.2]	202D221	222D221	7.4 [0.3]
07, 08	202K142	222K142	7.1 [0.3]	202D232	222D232	8.4 [0.3]
10, 12	202K153	222K152	8.4 [0.3]	202D242	222D242	9.7 [0.4]
14, 16	202K163	222K163	9.9 [0.4]	202D253	222D253	10.5 [0.4]
18, 20, 22	202K174	222K174	15.7 [0.6]	202D263	222D263	12.2 [0.5]
24	202K185	222K185	16.8 [0.7]	—	—	—

Uniboot Parts

Tinel-Lock Entry Size	Part No.	Cable OD (Min.)
04	202C611	4.8 [0.19]
05, 06, 07	202C621	8.1 [0.32]
08, 10, 12	202C632	12.7 [0.50]
12, 14, 16	202C642	17.5 [0.69]
16, 18, 20, 22	202C653	22.4 [0.88]
24	202C663	22.9 [0.90]

Catalog 1654025
Revised 3-13

www.te.com

Dimensions are shown for reference purposes only. Specifications subject to change.

Dimensions are in millimeters unless otherwise specified.

USA: +1 800 522 6752
Asia Pacific: +86 0 400 820 6015
UK: +44 800 267 666

For additional support numbers please visit www.te.com

Code 54 MIL-C-5015 (MS3400), MIL-C-26482 Series 2, MIL-C-83723 Series I and III, MIL-C-81703 Series III (Continued)

CRES-Lock Adapters (USA)
BND Adapters (Europe)

Code 54 Band Strap Adapter

Notes:
1. This product is designed to terminate a braided cable shield by means of a band strap and a heat shrinkable lipped boot to a connector.
2. See CH00-0250-016 for ordering information, modifications and additional dimensions.
3. See drawing BND-XX25S for band strap dimensions and information.
4. Adapter to be permanently marked with code identification number and full part number (e.g. 06090-BND54AB00-1812). Band strap shall bear no part marking.
5. All entry sizes are shown in Table II. Maximum entry sizes are as shown in Table I. For larger entry sizes than the maximum, a Type II adapter may be supplied. See CH00-0250-016 for further details.

For additional codes available, contact TE.

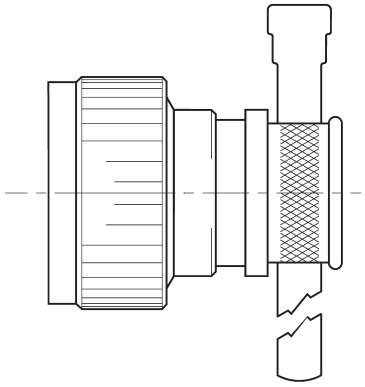

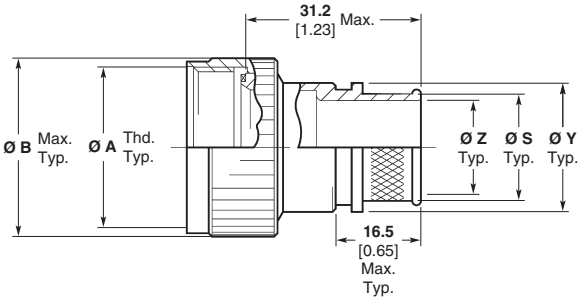

Straight Adapter
Code 00

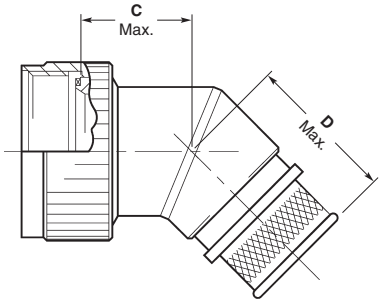

45° Adapter
Code 45

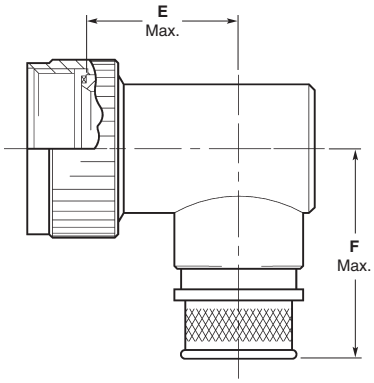

90° Adapter
Code 90

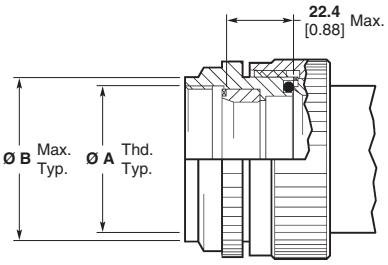

Type II Modification
(See Note 5)

Available in:	Americas	Europe	Asia Pacific
	■	■	■

Catalog 1654025
Revised 3-13

www.te.com

Dimensions are shown for reference purposes only. Specifications subject to change.

Dimensions are in millimeters unless otherwise specified.

USA: +1 800 522 6752
Asia Pacific: +86 0 400 820 6015
UK: +44 800 267 666

For additional support numbers please visit www.te.com

Code 54 MIL-C-5015 (MS3400), MIL-C-26482 Series 2, MIL-C-83723 Series I and III, MIL-C-81703 Series III (Continued)

CRES-Lock Adapters (USA)
BND Adapters (Europe)
(continued)

Code 54 Band Strap Adapter (Continued)

Table I

Order Number	Shell Size Series[2]	Shell Size Series[3]	Entry Size Max. Type I[1]	Ø A Unified Thread Class 2B	Ø B Max.	Ø B Max.[4]	C Max.	D Max.	F Max.
08	—	08	04	0.5000–20 UNF	**15.7** 0.67	**22.6** 0.89	**19.0** 0.75	**26.2** 1.03	**31.0** 1.22
10	—	10	06	0.6250–24 UNEF	**18.5** 0.73	**25.7** 1.01	**19.6** 0.77	**26.7** 1.05	**32.5** 1.28
12	7	12	08	0.7500–20 UNEF	**21.8** 0.86	**29.0** 1.14	**20.3** 0.80	**27.2** 1.07	**34.3** 1.35
14	12	14	09	0.8750–20 UNEF	**24.9** 0.98	**32.0** 1.26	**20.9** 0.82	**27.7** 1.09	**35.6** 1.40
16	19	16	11	0.9375–20 UNEF	**28.2** 1.11	**35.3** 1.39	**21.3** 0.84	**28.4** 1.12	**37.1** 1.46
18	27	18	12	1.0000–20 UNEF	**31.0** 1.22	**38.4** 1.51	**21.8** 0.86	**28.7** 1.13	**38.9** 1.53
20	37	20	14	1.1875–18 UNEF	**34.3** 1.35	**41.7** 1.64	**22.4** 0.88	**29.5** 1.16	**40.4** 1.59
22	—	22	16	1.3125–18 UNEF	**37.3** 1.47	**44.7** 1.76	**23.1** 0.91	**30.0** 1.18	**41.9** 1.65
24	—	24	18	1.4375–18 UNEF	**40.5** 1.59	**48.0** 1.89	**23.6** 0.93	**30.7** 1.21	**43.4** 1.71
28	—	28	22	1.7500–18 UNS	**50.0** 1.97	**54.4** 2.14	**24.9** 0.98	**31.8** 1.25	**48.3** 1.90
32	—	32	26	2.0000–18 UNS	**56.4** 2.22	**61.0** 2.40	**26.2** 1.03	**33.3** 1.31	**51.6** 2.03
36	—	36	28	2.2500–16 UN	**62.7** 2.47	**67.1** 2.64	**27.4** 1.08	**34.3** 1.35	**54.6** 2.15
40	—	40	32	2.5000–16 UN	**69.1** 2.72	**73.4** 2.89	**28.4** 1.12	**35.6** 1.40	**57.7** 2.27
44	—	44	34	2.75000–16 UN	**75.4** 2.97	**79.8** 3.14	**29.7** 1.17	**36.8** 1.45	**61.0** 2.40
48	—	48	34	3.0000–16 UN	**81.8** 3.22	**86.1** 3.39	**31.0** 1.22	**38.1** 1.50	**64.0** 2.52
61	61	—	18	1.5000–18 UNEF	**41.9** 1.65	**47.8** 1.88	**23.9** 0.94	**30.7** 1.21	**44.2** 1.74

1. All entry sizes are shown in Table II. Maximum entry sizes are as shown in Table I. For larger entry sizes than the maximum, a Type II adapter may be supplied. See CH00-0250-016 for further details.
2. Adapter mates to: MIL-C-81703 Series III, MS3424, MS3446, MS3464, MS3467, MS3468, Class E and L Connectors.
3. Adapter mates to MIL-C-5015G, MS3400 Series, Class D, E, K, L, U and W: MS3400, MS3401, MS3404, MS3406, MS3450, MS3451, MS3454, MS3456, MS3470, MS3471, MS3472, MS3474, MS3475, MS3476, MIL-C-83723 Series II, Class A and L. MIL-C-83723, /14, /36, /37, /38, /39, /40, /41, /42, /43, /48, /49, /65, /66, /67, /68, /69, /70, /71, /72, /73, /74, /75, /76, /77, /78, /82, /83, /84, /85, /86, /87, /91, /92, /95, /97, and /98 Connectors, MS3155 controlled interfaces.
4. These dimensions apply if a self-locking coupling nut is used, modification code "S".

Table II

Entry Size	Ø Z +0.25/-0.50 [+0.010/-0.020]	Ø S ±0.51 [±0.020]	Ø Y ±0.38 [±0.015]	E Max.
03	**4.75** 0.188	**7.92** 0.312	**11.10** 0.438	**16.3** 0.64
04	**6.35** 0.250	**9.52** 0.375	**12.70** 0.500	**16.3** 0.64
05	**7.92** 0.312	**11.12** 0.438	**14.30** 0.563	**17.3** 0.68
06	**9.52** 0.375	**12.70** 0.500	**15.88** 0.625	**17.8** 0.70
07	**11.12** 0.438	**14.30** 0.562	**17.50** 0.689	**18.8** 0.74
08	**12.70** 0.500	**15.88** 0.625	**19.05** 0.750	**19.8** 0.78
09	**14.30** 0.562	**17.50** 0.688	**20.65** 0.813	**20.3** 0.80
10	**15.88** 0.625	**19.05** 0.750	**22.23** 0.875	**20.8** 0.82
11	**17.50** 0.688	**20.65** 0.812	**23.80** 0.938	**21.8** 0.86
12	**19.05** 0.750	**22.23** 0.875	**25.40** 1.000	**22.9** 0.90
13	**20.65** 0.812	**23.83** 0.938	**27.00** 1.063	**23.9** 0.94
14	**22.23** 0.875	**25.40** 1.000	**30.16** 1.189	**24.4** 0.96

Table II (Continued)

Entry Size	Ø Z +0.25/-0.50 [+0.010/-0.020]	Ø S ±0.51 [±0.020]	Ø Y ±0.38 [±0.015]	E Max.
15	**23.83** 0.938	**27.00** 1.062	**31.75** 1.250	**24.9** 0.98
16	**25.40** 1.000	**28.58** 1.125	**33.34** 1.313	**25.9** 1.02
18	**28.58** 1.125	**31.75** 1.250	**36.51** 1.438	**28.3** 1.11
20	**31.75** 1.250	**34.90** 1.375	**39.69** 1.563	**29.8** 1.17
22	**34.90** 1.375	**38.10** 1.500	**42.86** 1.688	**31.3** 1.23
24	**38.10** 1.500	**41.28** 1.625	**46.83** 1.844	**33.8** 1.33
26	**41.28** 1.625	**44.45** 1.750	**49.61** 1.953	**35.1** 1.38
28	**44.45** 1.750	**47.63** 1.875	**52.78** 2.078	**36.3** 1.43
30	**47.65** 1.875	**50.80** 2.000	**56.36** 2.219	**37.8** 1.49
32	**50.80** 2.000	**54.00** 2.125	**59.53** 2.344	**39.6** 1.56
34	**54.00** 2.125	**57.15** 2.250	**62.71** 2.469	**41.1** 1.62

Catalog 1654025
Revised 3-13

www.te.com

Dimensions are shown for reference purposes only. Specifications subject to change.

Dimensions are in millimeters unless otherwise specified.

USA: +1 800 522 6752
Asia Pacific: +86 0 400 820 6015
UK: +44 800 267 666

For additional support numbers please visit www.te.com

Code 76 BS 9522 F0017 (Pattern 105)

Spin-Coupling Adapters

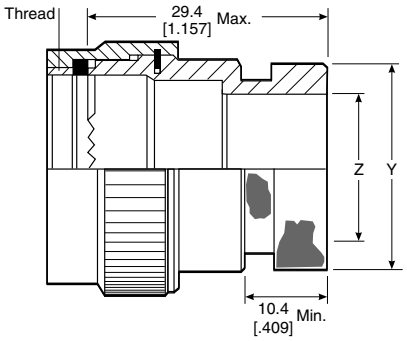

Table of Dimensions

Order No.	Shell Size	Thread	Dimensions	
			Y Max.	Z Min.
08	8	.438-28 UNEF	13.54 [0.53]	6.9 [0.27]
10	10	.562-24 UNEF	15.37 [0.61]	9.9 [0.39]
12	12	.688-24 UNEF	19.66 [0.77]	13.4 [0.53]
14	14	.812-20 UNEF	21.29 [0.84]	15.9 [0.63]
16	16	.938-20 UNEF	24.47 [0.96]	18.9 [0.74]
18	18	1.062-18 UNEF	26.47 [1.04]	21.4 [0.84]
20	20	1.188-18 UNEF	30.92 [1.22]	23.9 [0.94]
22	22	1.312-18 UNEF	34.42 [1.36]	27.4 [1.08]
24	24	1.438-18 UNEF	36.40 [1.44]	29.9 [1.18]

Molded Part Selection Guide (Spin-Coupling)

Order No.	Standard K Parts			Low-Profile D Parts		
	Straight Part No.	90° Part No.	Cable OD (Min.)	Straight Part No.	90° Part No.	Cable OD (Min.)
03, 08	202W232	—	4.3 [0.19]	—	—	—
03, 08	202K121	222K121	5.6 [0.22]	202D211	222D211	6.4 [0.25]
10, 11	202K132	222K132	5.9 [0.23]	202D221	222D221	7.4 [0.29]
12, 14	202K142	222K142	7.1 [0.28]	202D232	222D232	8.4 [0.33]
16, 18	202K153	222K152	8.4 [0.33]	202D242	222D242	9.7 [0.38]
20, 22	202K163	222K163	9.9 [0.39]	202D253	222D253	10.5 [0.41]
24, 28,	202K174	222K174	15.7 [0.62]	202D263	222D263	12.2 [0.48]
32, 36	202K185	222K185	16.8 [0.66]	202D274	222D274	14.3 [0.56]

Uniboot Parts

Order No.	Part No.	Cable OD (Min.)
03, 08	202C611	4.8 [0.19]
10, 11, 12	202C621	8.1 [0.32]
14, 16	202C632	12.7 [0.50]
18, 20	202C642	17.5 [0.69]
22, 24	202C653	22.4 [0.88]

Available in:	Americas	Europe	Asia Pacific
	■	■	■

Catalog 1654025
Revised 3-13

www.te.com

Dimensions are shown for reference purposes only. Specifications subject to change.

Dimensions are in millimeters unless otherwise specified.

USA: +1 800 522 6752
Asia Pacific: +86 0 400 820 6015
UK: +44 800 267 666

For additional support numbers please visit www.te.com

Code 76 BS 9522 F0017 (Pattern 105) (Continued)

Tinel-Lock Adapters

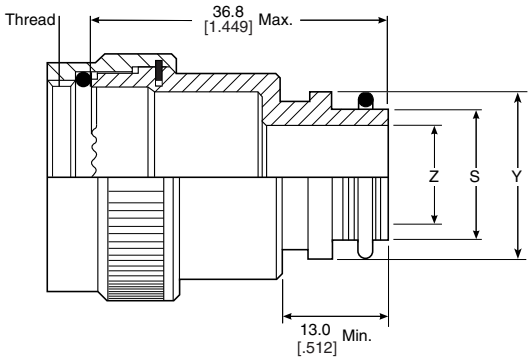

TXR76XX00-XXXXXX

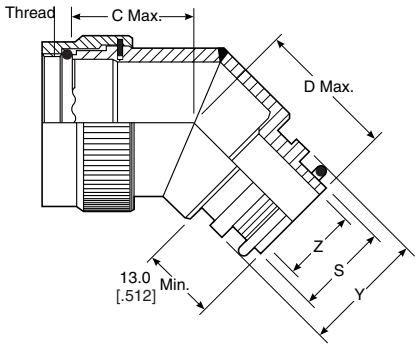

TXR76XX45-XXXXXX

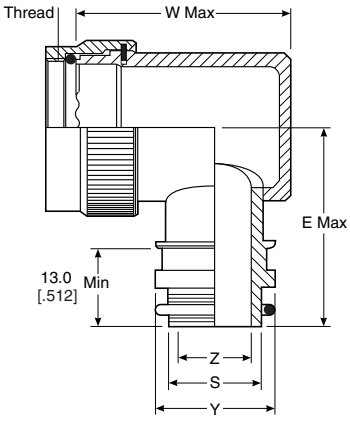

TXR76XX90-XXXXXX

Table of Dimensions

Order No.	Shell Size	Max. Entry Size Type 1*	Thread	Dimensions		
				C Max.	D Max.	E Max.
08	8	04	.438-28 UNEF	18.0 [.74]	21.3 [.87]	26.7 [1.05]
10	10	07	.562-24 UNEF	18.8 [.76]	22.1 [.90]	28.2 [1.11]
12	12	08	.688-24 UNEF	19.3 [.79]	22.9 [.92]	30.2 [1.19]
14	14	10	.812-20 UNEF	20.1 [.82]	23.4 [.95]	31.8 [1.25]
16	16	12	.938-20 UNEF	20.8 [.84]	24.1 [.97]	33.5 [1.32]
18	18	12	1.062-18 UNEF	21.3 [.87]	24.6 [1.00]	35.1 [1.38]
20	20	16	1.188-18 UNEF	22.1 [.89]	25.4 [1.02]	36.6 [1.44]
22	22	18	1.312-18 UNEF	22.6 [.92]	25.9 [1.05]	38.1 [1.50]
24	24	20	1.438-18 UNEF	23.4 [.97]	26.7 [1.07]	39.4 [1.55]

*For larger than maximum type 1 entry sizes, a two-piece adapter will be supplied. Contact TE for information.

Available in:	Americas	Europe	Asia Pacific
	■	■	■

Dimensions are shown for reference purposes only. Specifications subject to change.

Dimensions are in millimeters unless otherwise specified.

USA: +1 800 522 6752
Asia Pacific: +86 0 400 820 6015
UK: +44 800 267 666

For additional support numbers please visit www.te.com

Code 76 BS 9522 F0017 (Pattern 105) (Continued)

Tinel-Lock Adapters
(continued)

Entry Size Dimensions

Entry Size	Dimensions			
	Z +0.25–0.5	S Diameter (Min.–Max.)	Y ±0.38	W Max.
04	6.35 [0.25]	9.39—9.56 [0.37—0.38]	13.97 [1.22]	31.0 [0.55]
05	7.92 [0.31]	10.97—11.13 [0.43—0.44]	15.54 [1.29]	32.8 [0.61]
06	9.52 [0.37]	12.57—12.73 [0.49—0.50]	17.14 [1.35]	34.3 [0.67]
07	11.09 [0.44]	14.12—14.31 [0.55—0.56]	18.71 [1.41]	35.8 [0.74]
08	12.7 [0.50]	15.72—15.91 [0.62—0.63]	20.32 [1.47]	37.3 [0.80]
10	15.87 [0.62]	18.84—19.11 [0.74—0.75]	23.49 [1.60]	40.6 [0.92]
12	19.05 [0.75]	22.02—22.28 [0.87—0.88]	26.67 [1.72]	43.7 [1.05]
14	22.23 [0.88]	25.17—25.46 [0.99—1.00]	29.84 [1.85]	47.0 [1.17]
16	25.4 [1.00]	28.34—28.63 [1.12—1.13]	33.02 [1.97]	50.0 [1.30]
18	28.57 [1.12]	31.52—31.81 [1.24—1.25]	36.19 [2.10]	53.3 [1.42]
20	31.75 [1.25]	34.69—34.98 [1.37—1.38]	39.37 [1.55]	53.8 [2.19]

Molded Part Selection Guide (Tinel)

Tinel-Lock Entry Size	Standard K Parts			Low-Profile D Parts		
	Straight Part No.	90° Part No.	Cable OD (Min.)	Straight Part No.	90° Part No.	Cable OD (Min.)
04	202K232	—	3.3 [0.1]	—	—	—
04	202W232	—	4.3 [0.2]	—	—	—
04	202K121	222K121	5.6 [0.2]	202D211	222D211	6.4 [0.3]
05, 06	202K132	222K132	5.9 [0.2]	202D221	222D221	7.4 [0.3]
07, 08	202K142	222K142	7.1 [0.3]	202D232	222D232	8.4 [0.3]
10, 12	202K153	222K152	8.4 [0.3]	202D242	222D242	9.7 [0.4]
14, 16	202K163	222K163	9.9 [0.4]	202D253	222D253	10.5 [0.4]
18, 20, 22	202K174	222K174	15.7 [0.6]	202D263	222D263	12.2 [0.5]
24	202K185	222K185	16.8 [0.7]	—	—	—

Uniboot Parts

Tinel-Lock Entry Size	Part No.	Cable OD (Min.)
04	202C611	4.8 [0.19]
05, 06, 07	202C621	8.1 [0.32]
08, 10, 12	202C632	12.7 [0.50]
12, 14, 16	202C642	17.5 [0.69]
16, 18, 20, 22	202C653	22.4 [0.88]
24	202C663	22.9 [0.90]

Dimensions are shown for reference purposes only. Specifications subject to change.

Dimensions are in millimeters unless otherwise specified.

USA: +1 800 522 6752
Asia Pacific: +86 0 400 820 6015
UK: +44 800 267 666

For additional support numbers please visit www.te.com

Raychem FlexiScreen Backshells

FlexiScreen Backshells

The FlexiScreen high performance backshells are designed to provide EMC protection for both commercial and military applications. FlexiScreen backshells represent a significant improvement over pig-tail termination methods by providing 360˚ EMC shielding on the termination area of each individual cable. FlexiScreen backshell terminations can be installed to allow the cable bundle to be installed at various angles, such as 30 & 45˚, using a single backshell design.

FlexiScreen backshells can be installed to allow the cable bundle to be formed at various angles, such as 90˚ and 45˚, using a single backshell design.

FlexiScreen backshells are a cost effective solution while maintaining low weight.

Product Facts

- **Cost effective solution**
- **Capitalizes on proven performance of HexaShield adapter components**
- **Flexible and variable bending configurations**
- **Light weight**
- **Repairable**
- **Out performs commonly used alternatives**

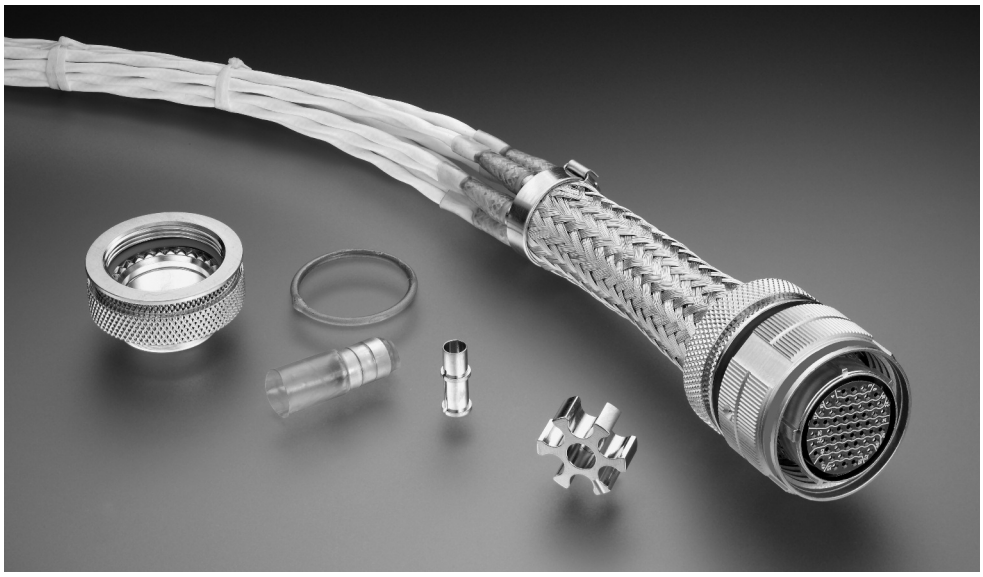

Applications

Designed to be mounted on MIL-DTL-38999, 83723, 26482, 5015, or commonly used connectors

Aerospace, Defense, Ground Vehicles, Control Circuits — where excellent EMI and shielding performance is required

Standards & Specs

Finish Types: SAE-AMS-PQ-P-416 cadmium olive drab, SAE-AMS-C-26074 Class 3, grade B Electroless Nickel (others available upon request)

TE Specification RB-117

RPIP-696-21 Installation Procedure for FlexiScreen backshells

Kit Contents

1 backshell assembly

1 multi-position star

1 band strap

Electrical

DC resistance:
<5.0 mΩ braid to backshell per SAE-AS85049
<10.0 mΩ braid to cable braids per RB-117

Shielding effectiveness:
Complies with ANSI/NEMA EC 61-2005

Lightning strike:
No damage or degradation of components. Tested per RTCA/DO-160F, Section 22

Physical or Other Properties

Vibration:
Tested per EAI-364-28, test condition VI, Letter J

Mechanical shock:
Tested per EAI-364-27, test condition D

Cable pull-out:
Tested per MIL-STD-1344, method 2009-1, test condition A

Operating temperature:
-65˚ to +150˚

Catalog 1654025
Revised 3-13

www.te.com

Dimensions are shown for reference purposes only. Specifications subject to change.

Dimensions are in millimeters unless otherwise specified.

USA: +1 800 522 6752
Asia Pacific: +86 0 400 820 6015
UK: +44 800 267 666

For additional support numbers please visit www.te.com

Raychem FlexiScreen Backshells (Continued)

Part Numbering System

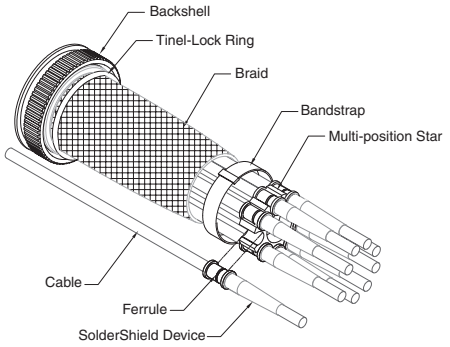

FLS40 - A B 10 A - A

- Star Configuration (number of ferrule positions)
  A = Standard star
  B = Star one size smaller
  C = Star one size larger
- Braid - (Braid supplied 3" (76mm) as standard length)
  A = Tin-plated copper, 36 awg, single braid
  B = Tin-plated copper, 36 awg, double braid
  C = Nickel plated copper, 36 awg, single braid
  D = Nickel plated copper, 36 awg, double braid
- Order Number
- Finish Type:
  B = Cadmium olive drab to SAE-AMS-PQ-P-416
  C = Electroless nickel to SAE-AMS-C-26074 Class 3, Grade B
- Material Code:
  A = Aluminum alloy
  K = Stainless steel
- Connector Code Number:
  FLS40 = MIL-DTL-38999 Series III and IV
  FLS41 = MIL-DTL-38999 Series I and II
  FLS 54 = MIL-DTL-5015H (now SAE-AS50151), MIL-DTL-26482 series 2, M83723 series 1 and III, MIL-DTL-81703 (now SAE-AS81703), and all connectors with MS3155 controlled accessory interface.

Also available for other connector codes. Please consult TE for further information.

FLS40

ORDER NO.	SHELL SIZE	ENTRY SIZE	ØZ +0.10 -.020	ØA METRIC THREAD CLASS 6H	ØB MAX	STAR CONFIGURATION (NUMBER OF FERRULE POSITIONS)
10	11	07	11.09 [0.437]	M15 X 1	21.25 [0.84]	A= 2 B= N/A C= 3
12	13	08	12.70 [0.500]	M18 X 1	24.50 [0.97]	A= 3 B= 2 C= 5
14	15	10	15.87 [0.625]	M22 X 1	29.00 [1.15]	A= 5 B= 3 C= 6
16	17	12	19.05 [0.750]	M25 X 1	33.50 [1.32]	A= 6 B= 5 C= 7
18	19	14	22.23 [0.875]	M28 X 1	37.50 [1.48]	A= 7 B= 6 C= 9
20	21	16	25.40 [1.00]	M31 X 1	39.50 [1.56]	A= 9 B= 7 C= 10
22	23	18	28.57 [1.125]	M34 X 1	42.00 [1.66]	A= 10 B= 9 C= 13
24	25	20	34.93 [1.375]	M37 X 1	45.00 [1.78]	A= 12 B= 10 C= 17

FLS41

ORDER NO.	SHELL SIZE		ENTRY SIZE	ØZ +0.10 -.020	ØA THREAD RH CLASS 2B	ØB MAX	STAR CONFIGURATION (NUMBER OF FERRULE POSITIONS)
	SER 1	SER 2					
10	11	10	06	9.52 [.375]	.562-24 UNEF	22.2 [.875]	A= 2 B= N/A C= 3
12	13	12	08	12.70 [.500]	.688-24 UNEF	25.4 [1.00]	A= 3 B= 2 C= 5
14	15	14	10	15.87 [.625]	.812-20 UNEF	30.2 [1.188]	A= 5 B= 3 C= 6
16	17	16	12	19.05 [.750]	.938-20 UNEF	33.3 [1.312]	A= 6 B= 5 C= 7
18	19	18	12	19.05 [.750]	1.062-18 UNEF	36.5 [1.438]	A= 7 B= 6 C= 9
20	21	20	14	22.23 [.875]	1.188-18 UNEF	39.6 [1.562]	A= 9 B= 7 C= 10
22	23	22	16	25.40 [1.00]	1.312-18 UNEF	42.9 [1.688]	A= 10 B= 9 C= 13
24	25	24	18	28.57 [1.125]	1.438-18 UNEF	45.2 [1.781]	A= 12 B= 10 C= 17

FLS54

ORDER NO.	SHELL SIZE	ENTRY SIZE	ØZ +0.10 -.020	ØA THREAD CLASS 6H	ØB MAX	STAR CONFIGURATION (NUMBER OF FERRULE POSITIONS)
10	10, 10S & 10SL	06	9.52 [.375]	.6250"-24 UNEF	20.40 [0.80]	A= 2 B= N/A C= 3
12	12 & 12S	08	12.70 [.500]	.7500"-20 UNEF	23.80 [0.93]	A= 3 B= 2 C= 5
14	14 & 14S	08	12.70 [.500]	.8750"-20 UNEF	27.00 [1.06]	A= 5 B= 3 C= 6
16	16 & 16S	10	18.87 [.625]	1.0000"-20 UNEF	31.45 [1.23]	A= 6 B= 5 C= 7
18	18	12	19.05 [.750]	1.0625"-18 UNEF	33.25 [1.30]	A= 7 B= 6 C= 9
20	20	14	22.22 [.875]	1.1875"-18 UNEF	36.45 [1.43]	A= 9 B= 7 C= 10
22	22	16	25.40 [1.000]	1.3125"-18 UNEF	39.60 [1.55]	A= 10 B= 9 C= 13*
24	24	18	28.58 [1.125]	1.4375"-18 UNEF	42.80 [1.68]	A= 12 B= 10 C= 17*

* - STAR CONFIGURATION USES 3 PIECE STAR (1 STAR, 2 HALF STARS)

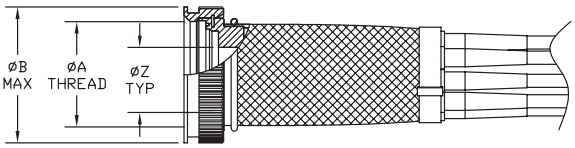

Dimensions are shown for reference purposes only. Specifications subject to change.

Dimensions are in millimeters unless otherwise specified.

USA: +1 800 522 6752
Asia Pacific: +86 0 400 820 6015
UK: +44 800 267 666

For additional support numbers please visit www.te.com

Introduction

Product Facts

- Superior EMC/EMI Shielding Performance
- Simple installation
- Easy reentry
- Simplified maintenance and repair
- Excellent mechanical and environmental resistance
- Efficient strain relief
- Flexibility
- Versatility

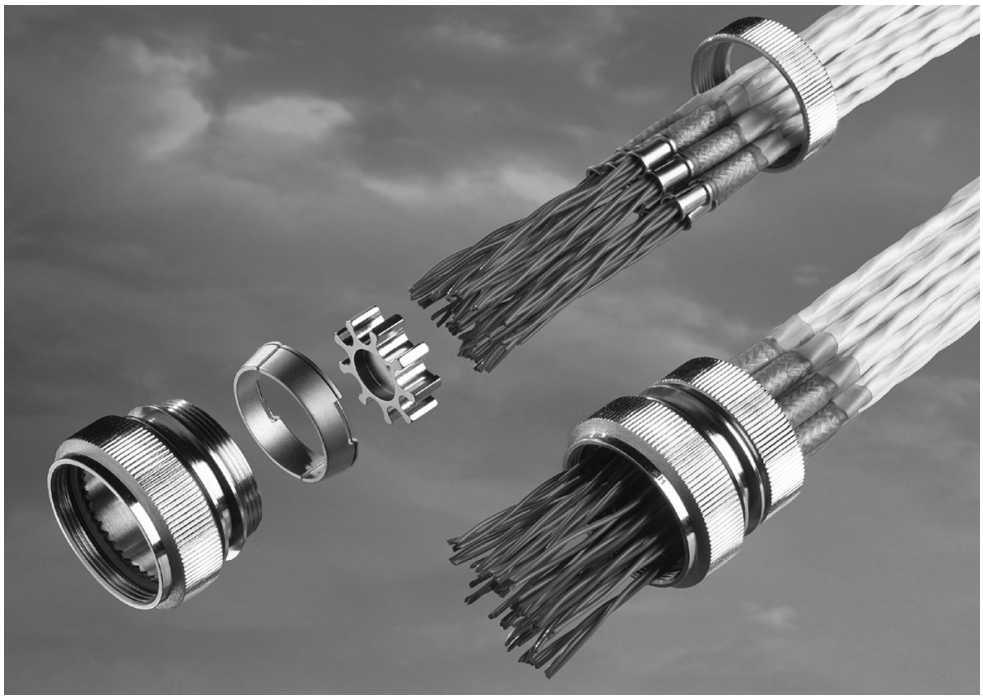

Applications

TE, a longtime leader in harnessing technology, has written a new chapter in EMC shielding with the introduction of the Raychem brand HexaShield EMC adapter.

Designed to provide EMC protection solutions for both commercial and military applications, HexaShield adapters represent a significant improvement over pigtail termination methods. By providing 360-degree EMC shielding on the termination area of each individual cable, HexaShield adapters provide outstanding shielding effectiveness.

HexaShield adapters are simple to install, easy to maintain, and dependably resistant to mechanical and environmental stresses.

Principal points and features

- Easy reentry: To insert or remove ferrules from the HexaShield adapter, simply loosen the back nut.
- Superior protection: No degradation of shielding performance.
- Up to four shielded cables accommodated by each ferrule.
- Mechanical and environmental protection equal to backshells complying with MIL-C-85049 Category 3B.
- Strain relief on each individual cable.
- Weight reduction, by possibly eliminating the need for overall shielding.
- Compact size - not exceeding outer diameter of connector.
- Available in straight, 45° and 90° angles, as well as swept and long bodies.

Simple assembly and installation

1. Solder cable or wire shield to a ferrule with a heat-shrinkable SolderShield terminator.
2. Clip ferrule into one of the grounding star cavities.
3. Secure the back nut of the HexaShield adapter so that the conic ring assembly automatically compresses the ferrules.

Available in:	
Americas	■
Europe	■
Asia Pacific	■

Designed to corresponding connector specifications

Two Platings Available	TE Product Specifications
Electroless nickel (MIL-DTL-26074)	RB-110 and RB-114
Olive drab cadmium (QQ-P-416 Type II Class 3)	—

*Contact TE for additional platings.

Installation Procedures

Installation procedure for HET-A-02X and HET-A-04X (RPIP-696-00)	Installation procedure for HET-03X (RPIP-696-03)	General procedure for cylindrical connectors, right-angle body (RPIP-696-07)
General procedure for ARINC 600 Size II connectors (RPIP-696-01)	General procedure for cylindrical connectors, straight body (RPIP-696-04)	—
General procedure for ARINC 600 Size III connectors (RPIP-696-02)	—	—
RPIP-696-13 HexaShield Filling Factors		

Catalog 1654025
Revised 3-13

www.te.com

Dimensions are shown for reference purposes only. Specifications subject to change.

Dimensions are in millimeters unless otherwise specified.

USA: +1 800 522 6752
Asia Pacific: +86 0 400 820 6015
UK: +44 800 267 666

For additional support numbers please visit www.te.com

Kit Descriptions

Hexashield Adapters for Circular Connectors: Straight, 45°and 90° Assemblies

Item	Description
1	Straight adapter assembly
2	Conic ring assembly
3	Star Plain (Standard) Drilled (Option) Split (Option) _
4	Straight adapter assembly - “L” version - nominally 0.5" [12.7] longer body
5	45° adapter assembly - welded
6	45° adapter assembly - swept
7	90° adapter assembly - welded
8	90° adapter assembly - swept Standard products shown. Variants available on request. Split star assemblies are shown on relevant customer drawings where applicable.

Item	HexaShield Version
-1	Back Nut
-2	Tinel adapter assembly Tinel-Lock ring for single braid
-3	Bandstrap adapter assembly
-C	Conduit adapter

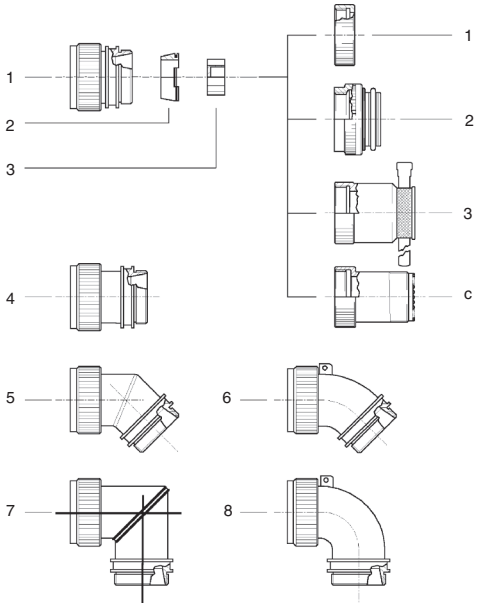

HexaShield Adapters for ARINC 404/600 Connectors: Sizes 1, 2, 3 and 4 Assemblies

Item	Description
1	Left side support
2	Right side support
3	Retention bars
4	Body assemblies Body Holding nut Conic ring assembly Star _ Back nut
5	Cavity plug assemblies Plug Holding nut
6	Pan head screws - 4-40 UNC
7	Spring washers

ARINC 600 Size 2 shown
Stars are available as plain, drilled or split.
See relevant customer drawings for further information

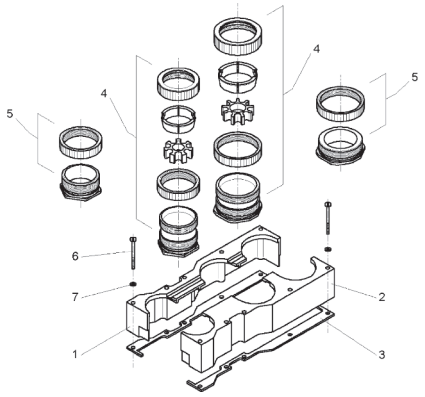

Catalog 1654025
Revised 3-13

www.te.com

Dimensions are shown for reference purposes only. Specifications subject to change.

Dimensions are in millimeters unless otherwise specified.

USA: +1 800 522 6752
Asia Pacific: +86 0 400 820 6015
UK: +44 800 267 666

For additional support numbers please visit www.te.com

Ordering Information

Part Numbering for Standard Products

HexaShield Adapter for Circular Connectors

HEXYY L -AY -00 S -YY -AY -Y -DS

Drilled Star:
See applicable customer drawing for star options

Type of Back Nut:
1 = Standard back nut
2 = Clamping nut for tinel ring (for overbraid protection)
3 = Clamping nut with bandstrap
C = Clamping nut for conduit applicator

Max. number of ferrules that can be accommodated
See applicable customer drawing for options

Hexashield Size Code:
See applicable customer drawing for order number (shell

S = Swept version

Configuration:
00 = Straight body
45 = 45 degree angle body
90 = 90 degree angle body

Type of Plating:
B = Cadmium plated
C = Electroless nickel

L = Long body
See applicable customer drawing for availability

Connector Code Number:
21 = MIL-C-26482 Series 1
40 = MIL-DTL-38999 Series 3 and 4
41 = MIL-DTL-38999 Series 1 and 2
54 = MIL-DTL-83723 Series 1 and 3
MIL-C-25482 Series 2

Catalog 1654025
Revised 3-13

www.te.com

Dimensions are shown for reference purposes only. Specifications subject to change.

Dimensions are in millimeters unless otherwise specified.

USA: +1 800 522 6752
Asia Pacific: +86 0 400 820 6015
UK: +44 800 267 666

For additional support numbers please visit www.te.com

Ordering Information (Continued)

HexaShield Adapter for Collins Connectors

HEXDB-AC-00-A9-1

00 = Straight body
90 = Right-angle body

HexaShield Adapter for ARINC 600 Connectors

HEXA6-AY-00-YY-AY-Y

Clamping nut version:
1 = Clamping nut alone
2 = Clamping nut for tinel ring

Number of ferrules:
18 for ARINC 600 size II (A and B cavities)
25 for ARINC 600 size II (A, B and C cavities)
18 for ARINC 600 size III (A and B cavities)
See applicable customer drawing for options

ARINC Connector Size:
02 = ARINC 600 size II
03 = ARINC 600 size III

Configuration:
00 = Straight body
90 = Right-angle body

Plating:
B = Cadmium plated
C = Electroless nickel

Drilled Stars are standard on ARINC 600 adapters.

Part Numbering of Ferrule Kits*

HET-A-02X for small-size cable with SolderShield terminator
HET-A-03X for connection of unshielded cables
ferrules with heat-shrinkable tubing (no shield)
HET-A-04X for large-size cables with SolderShield terminator

Type of Plating:
B = Cadmium plated
C = Electroless nickel

HEX07-AX ferrule - solid blank for use when a HET-A is not needed

Type of Plating:
B = Cadmium plated
C = Electroless nickel

*Not all part numbers are standard; your local TE representative will assist you in selecting the appropriate standard product

Catalog 1654025
Revised 3-13

www.te.com

Dimensions are shown for reference purposes only. Specifications subject to change.

Dimensions are in millimeters unless otherwise specified.

USA: +1 800 522 6752
Asia Pacific: +86 0 400 820 6015
UK: +44 800 267 666

For additional support numbers please visit www.te.com

EMC Performance

Product Facts

- **Outperforms traditional pigtail termination, especially in HIRF performance**
- **Withstands 10-kA peak current lightning transients of SAE AE4L-87-3**

Transfer Impedance

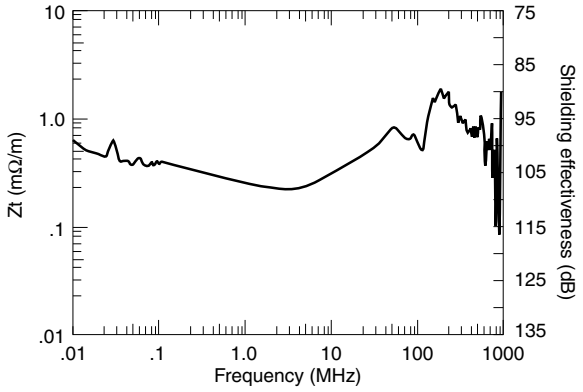

HexaShield size: 23

Cable: TE 5024H8424 (one cable installed)

Test method: CEI 96-1

Protection Level

Generalized system performance (Actual system performance in any one test method may differ.)

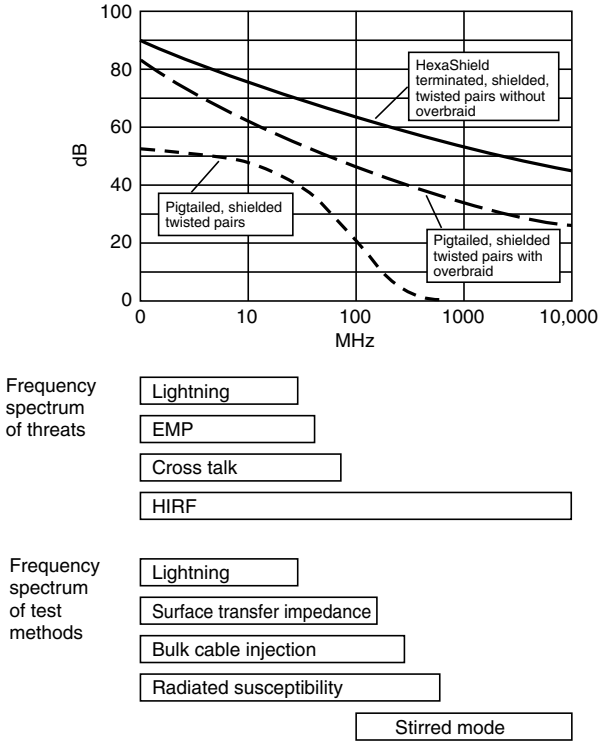

Catalog 1654025
Revised 3-13

www.te.com

Dimensions are shown for reference purposes only. Specifications subject to change.

Dimensions are in millimeters unless otherwise specified.

USA: +1 800 522 6752
Asia Pacific: +86 0 400 820 6015
UK: +44 800 267 666

For additional support numbers please visit www.te.com

EMC Performance (Continued)

Typical HexaShield Applications

Civilian and military aircraft
Avionics
Fighter aircraft
Missiles and launch support systems
Armored and military support vehicles
Navy ships (total shipboard hardening)
Military communications
Engines (FADEC harness hardening)

HexaShield Product Range

Accommodates the following connector types*:
MIL-C-26482 Series 1
MIL-DTL-38999 Series 1, 2, 3, and 4
MIL-C-26482 Series 2
MIL-DTL-83723 Series 1 and 3
DBAD
ARINC 600
ARINC 404

*Please contact TE for other connector types and special requests.

HexaShield F

Flexible EMI Termination System

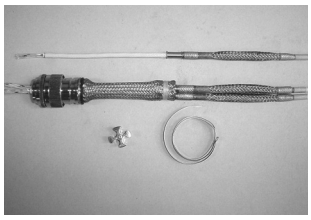

Individual cable braid terminations offering multiple connector pin repairs with zero pig-tail length for superior EMC performance, without the need for gross over-braid.

HexaShield F provides the following advantages:

- Installation ease reduces shield termination labor cost
- Ease of maintenance and repair allows performance of normal connector contact repairs, addition or change of a cable multiple times
- Small size and lightweight
- Sound mechanical performances of termination
- Provides strain relief on individual cables
- Better shielding performance of termination
- Available in various star sizes and platings (TE FLX40 series drawings. Contact TE for detailed information)

Applications

HexaShield F termination system is especially useful for high-speed quadrax cable (IEEE 1394) applications.

Product Facts

- **Maintains electrical integrity while connecting controlled electrical cables to mil-spec connectors**
- **Flexible and versatile design fits most mil-spec connectors, shielded signal wires, and ARINC connectors**
- **Zero pigtail length braid termination**
- **Modular cable termination using ferrules, SolderSleeve devices, stars, and braid allows for repeated cable segment repairability**
- **Stars for ferrules with band strap (Tinel-Lock ring can be available) allows for easy re-entry for repair and replacement while providing a secure attachment**
- **Various ferrule count and star positions with optional plugs available to accommodate various cables and plugs**

Dimensions are shown for reference purposes only. Specifications subject to change.

Dimensions are in millimeters unless otherwise specified.

USA: +1 800 522 6752
Asia Pacific: +86 0 400 820 6015
UK: +44 800 267 666

For additional support numbers please visit www.te.com

Raychem Spin Lock Variable Angle Backshell

The Raychem spin lock variable angle backshell enables straight, 45˚ and 90˚ cable terminations with the same part. The connector backshell swivelling body rotates around the axis of the cable bundle and locks in position, minimizing stress on the wire bundle and providing more robust strain relief than other termination systems.

Product Facts

- **Variable angle backshell enables straight, 45˚ and 90˚ cable terminations with the same part**
- **High performance, low resistance shield termination provided by the proven Tinel-Lock ring system or bandstrap**
- **Sealed termination achieved via a standard heat-shrinkable molded shape and adhesive system**
- **Available in a variety of material and plating options**
- **Saddle clamp strain relief or heat-shrinkable molded shape provides strain relief and sealing**

Application Tooling

RH-3960-1 TINEL-KIT-120V or AD-5000-TINEL-ASSY (240v)

Torque Wrench

Heat Gun (if using heat-shrinkable molded part version)

Applications

Military and Commercial Aerospace

Military Ground Systems

Military Marine

Commercial Ships and Off-Shore Marine

Materials

Aluminum with Electroless Nickel or Cadmium over Electroless Nickel or Zinc Nickel plating

Standards & Specs

Application Specification:

MIP-103-1 (Installation Procedure, Saddle Clamp Strain Relief)

MIP-103-2 (Installation Procedure, Molded Part Strain Relief)

Product Specification: MPS-103

Additional Documents: SLC40, SLC41, SLC54, SLM40, SLM41, SLM54, CH00-0250-019

Electrical/Mechanical

Title	Requirement	Passing Criteria
Examination of product	MPS-103 3.3.1	Meet drawing dimension
DC Resistance	MPS-103 3.3.2	DC Resistance < 2.5mΩ
Salt Spray	MPS-103 3.3.3	Exposure of basis metal: Non-critical area <0.1" Critical area <.025"
Vibration (Category 3B)	MPS-103 3.3.4	Must pass visual and DC Resistance criteria
Shock (Category 3B)	MPS-103 3.3.5	Must pass visual and DC Resistance criteria
Cable Pullout	MPS-103 3.3.6	Cable Slippage <0.125"
Braid Retention	MPS-103 3.3.7	DC Resistance < 2.5 mΩ
Coupling Thread Strength	MPS-103 3.3.8	No visible damage to threads, coupling nut or anti-rotational teeth
DC Resistance	MPS-103 3.3.2	DC Resistance < 2.5mΩ
External Bending Moment	MPS-103 3.3.9	No visible damage to adapter body, threads, coupling nut or anti-rotational teeth
Post Test Examination	MPS-103 3.3.10	Meet drawing dimensions

*MPS-103 Requirements meet or exceed SAE-AMS-85049

Catalog 1654025
Revised 3-13

www.te.com

Dimensions are shown for reference purposes only. Specifications subject to change.

Dimensions are in millimeters unless otherwise specified.

USA: +1 800 522 6752
Asia Pacific: +86 0 400 820 6015
UK: +44 800 267 666

For additional support numbers please visit www.te.com

Raychem Spin Lock Variable Angle Backshell (Continued)

Straight

90°

45°

Clamp Only

SLC AB – 16

- 16 – Order Number (See customer drawing)
- AB – Plating (See table below)
- SLC – Material (See table below)

Saddle Clamp Version

SLC 40 AB – 1610 A

- A – Ring Designator (See table below)
- 1610 – Entry Size (See table below)
- 1610 – Order Number (See customer drawing)
- AB – Plating (See table below)
- AB – Material (See table below)
- 40 – Connector Code Number (see customer drawing - leave blank for clamp only)
- SLC – Strain Relief Method (See table below)

Molded Boot Version

SLM 40 AB – 1610 A – 3/42 – O

- O – Color (Black)
- 42 – Adhesive (See 245WOXX)
- 3 – Molded Part Material (See 245WOXX)
- A – Ring Designator (See table below)
- 1610 – Entry Size (See table below)
- 1610 – Order Number (see customer drawing)
- AB – Plating (See table below)
- AB – Material (See table below)
- 40 – Connector Code Number (See customer drawing - leave blank for clamp only)
- SLM – Strain Relief Method (see table below)

Body Only

SLX 40 AB – 1610

- 1610 – Entry Size (See table below)
- 1610 – Order Number (see customer drawing)
- AB – Plating (See table below)
- AB – Material (See table below)
- 40 – Connector Code Number (See customer drawing - leave blank for clamp only)
- SLX – Strain Relief Method (see table below)

Additional Images:

Notes:			
Strain Relief Method:	M	=	Molded Part
	C	=	Clamp Strain Relief
	X	=	Body Only
Material:	A	=	Aluminum Alloy
	S	=	Stainless Steel (contact TE)
Plating:	B	=	Cadmium olive drab to SAE-AMS-PQ-P-146
	C	=	Electroless Nickle to SAE-AMS-26074 Class 3 or 4, Grade A
	Z	=	Zinc Nickel, Black to ASTM BB41 Grade 1, Type D
	J	=	Passivated per SAE-AMS-QQ-P-35 or MIL-S-5002 (contact TE)
Ring Designator:	A	=	AI
	B	=	BI
	C	=	C1
	D	=	Band Strap (contact TE)
	Leave Blank for no band or Tinel-Lock Ring		

Dimensions are shown for reference purposes only. Specifications subject to change.

Dimensions are in millimeters unless otherwise specified.

USA: +1 800 522 6752
Asia Pacific: +86 0 400 820 6015
UK: +44 800 267 666

For additional support numbers please visit www.te.com

Table of Contents

Assemblies
KTKK Product Family Overview 7-2
KTKK Assemblies Screened . . . . . 7-3 to 7-5
Feedthroughs
TCFS/R Cable Feedthroughs . . . . . 7-6 to 7-8
Preinstalled Adhesives
S1030, S1048, S1275 (Rayaten) Preinstalled Adhesives 7-9
Kits
SESK Shipboard Electrical Splice Kits 7-10
Ship or Shore Breakout Kits 7-11
Custom Maintenance and Repair Kits . . . . . 7-12 to 7-14
Marine High Voltage Termination & Splice Kits 7-15, 7-16

TE Connectivity assemblies and kits fit a wide variety of applications.

KTKK assemblies are available with Rayaten screened molded parts, to suit a wide range of connectors. For correct part number referencing, please contact TE. Unscreened versions are available as well.

TCFS/R feedthroughs are also available, both with Rayaten screened molded parts or in unscreened versions.

TE KTKK and TCFS/R product families come with the added advantage of preinstalled adhesives, which can drastically reduce the installation time and cost of harness building.

SESK shipboard electrical splice kits can be used to splice multiconductor cables in new ship construction, allowing modular wiring techniques and use of existing wiring when jumbo-sizing commercial ships.

Ship-to-shore kits are used to bring shore power to a ship in dock.

Note: Users should independently evaluate the suitability of the product for their application. Before ordering, check with TE for most current data.

Catalog 1654025
Revised 3-13

www.te.com

Dimensions are shown for reference purposes only. Specifications subject to change.

Dimensions are in millimeters unless otherwise specified.

USA: +1 800 522 6752
Asia Pacific: +86 0 400 820 6015
UK: +44 800 267 666

For additional support numbers please visit www.te.com

KTKK Product Family Overview

Applications

KTKK cable assemblies are one-part assemblies for screened and unscreened cables. Constructed from heat-shrinkable screened molded parts and connector adapters, the assembly consists of parts already well proven in harsh military environments.

Installation is simply effected by coupling the adapter to the connector and shrinking the rear of the molded part onto the cable with a hot air gun.

The molded part has a hot-melt adhesive preinstalled to provide a bond between the cable jacket and the molded part.

When used in conjunction with shielded (screened) cables, the assembly provides electrical continuity between the cable shield and the connector with Rayaten molded parts.

Rayaten molded parts are shielded, heat-shrinkable parts providing shielding levels better than 80 dB at 100 MHz.

Assembly Types

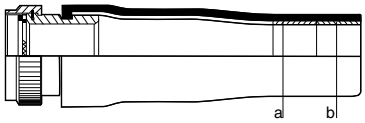

Straight Assemblies

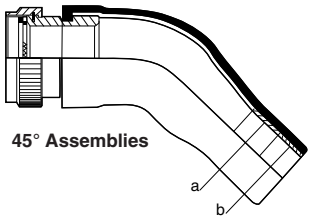

45° Assemblies

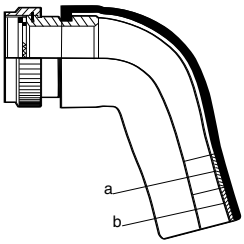

90° Assemblies

a = Preinstalled conductive adhesive for use with Rayaten screened molded parts only.

b = Preinstalled environment adhesive for use with screened and unscreened KTKK assemblies (see “Preinstalled adhesives,” page 7-9).

Materials Available

Material		Specification
-25 fluid-resistant modified elastomer	-25S fluid-resistant modified elastomer; shielded	RW-2077
-100 low-fire-hazard material	-100S low-fire-hazard; shielded	RW-2078

Precoated Adhesives

Material	Available Coatings (Unshielded)	Available Coatings (Shielded)
-25	S1048 (/86) high-temperature hot-melt adhesive	—
-25S	—	S1030 (/180) low-fire-hazard hot-melt adhesive
-100	S1030 (/180) low-fire-hazard hot-melt adhesive	—
-100S	—	S1275 conductive adhesive for use with Rayaten molded parts.

Available in:	Americas	Europe	Asia Pacific
	■	■	■

Dimensions are shown for reference purposes only. Specifications subject to change.

Dimensions are in millimeters unless otherwise specified.

USA: +1 800 522 6752
Asia Pacific: +86 0 400 820 6015
UK: +44 800 267 666

For additional support numbers please visit www.te.com

KTKK Assemblies Screened

Pattern 105 Connectors or Connector Code 76

25S Fluid Resistant Elastomer

Connector Shell Size	Straight Assemblies		90° Assemblies	
	Part Number	Cable O.D. Range	Part Number	Cable O.D. Range
08	KTKK 0520	5.0-8.0 [.197-.315]	—	—
10	KTKK 0521	6.0-13.0 [.236-.512]	KTKK 1051	6.0-13.0 [.236-.512]
12	KTKK 0522	7.2-15.0 [.283-.591]	KTKK 1052	7.2-15.0 [.283-.591]
14	KTKK 0523	7.2-15.0 [.283-.591]	KTKK 1053	7.2-15.0 [.283-.591]
16	KTKK 0524	8.5-19.0 [.335-.748]	KTKK 1054	8.5-19.0 [.335-.748]
18	KTKK 0525	8.5-20.0 [.335-.748]	KTKK 1055	8.5-19.0 [.335-.748]
20	KTKK 0526	10.0-24.0 [.394-.945]	KTKK 1056	10.0-24.0 [.394-.945]
22	KTKK 0527	10.0-24.0 [.394-.945]	KTKK 1057	10.0-24.0 [.394-.945]
24	KTKK 0528	15.8-33.0 [.622-1.299]	KTKK 1058	15.8-33.0 [.622-1.299]

100S Low Fire Hazard Material

08	KTKK 0465	5.0-7.0 [.197-.276]	—	—
10	KTKK 0466	6.0-9.0 [.236-.354]	KTKK 1251	6.0-9.0 [.236-.354]
12	KTKK 0467	7.2-11.0 [.283-.433]	KTKK 1252	7.2-11.0 [.283-.433]
14	KTKK 0468	7.2-11.0 [.283-.433]	KTKK 1253	7.2-11.0 [.283-.433]
16	KTKK 0469	8.5-17.0 [.335-.669]	KTKK 1254	8.5-17.0 [.335-.669]
18	KTKK 0470	8.5-17.0 [.335-.669]	KTKK 1255	8.5-17.0 [.335-.669]
20	KTKK 0471	10.0-21.0 [.394-.827]	KTKK 1256	10.0-21.0 [.394-.827]
22	KTKK 0472	10.0-21.0 [.394-.827]	KTKK 1257	10.0-21.0 [.394-.827]
24	KTKK 0473	15.8-29.0 [.622-1.142]	KTKK 1258	15.8-29.0 [.622-1.142]

Pattern 602 Connectors or Connector Code 54

25S Fluid Resistant Elastomer

Connector Shell Size	Straight Assemblies		90° Assemblies	
	Part Number	Cable O.D. Range	Part Number	Cable O.D. Range
08	KTKK 0840	5.0-8.0 [.197-.315]	—	—
10	KTKK 0841	6.0-13.0 [.236-.512]	KTKK 0851	6.0-13.0 [.236-.512]
12	KTKK 0842	7.2-15.0 [.283-.591]	KTKK 0852	7.2-15.0 [.283-.591]
14	KTKK 0843	7.2-15.0 [.283-.591]	KTKK 0853	7.2-15.0 [.283-.591]
16	KTKK 0844	8.5-19.0 [.335-.748]	KTKK 0854	8.5-19.0 [.335-.748]
18	KTKK 0845	8.5-19.0 [.335-.748]	KTKK 0855	8.5-19.0 [.335-.748]
20	KTKK 0846	10.0-24.0 [.394-.945]	KTKK 0856	10.0-24.0 [.394-.945]
22	KTKK 0847	10.0-24.0 [.394-.945]	KTKK 0857	10.0-24.0 [.394-.945]
24	KTKK 0848	15.8-33.0 [.622-1.299]	KTKK 0858	15.8-33.0 [.622-1.299]

100S Low Fire Hazard Material

08	KTKK 0612	5.0-7.0 [.197-.276]	—	—
10	KTKK 0613	6.0-9.0 [.236-.354]	KTKK 1241	6.0-9.0 [.236-.354]
12	KTKK 0614	7.2-11.0 [.283-.433]	KTKK 1242	7.2-11.0 [.283-.433]
14	KTKK 0615	7.2-11.0 [.283-.433]	KTKK 1243	7.2-11.0 [.283-.433]
16	KTKK 0616	8.5-17.0 [.335-.669]	KTKK 1244	8.5-17.0 [.335-.669]
18	KTKK 0617	8.5-17.0 [.335-.669]	KTKK 1245	8.5-17.0 [.335-.669]
20	KTKK 0618	10.0-21.0 [.394-.827]	KTKK 1246	10.0-21.0 [.394-.827]
22	KTKK 0619	10.0-21.0 [.394-.827]	KTKK 1247	10.0-21.0 [.394-.827]
24	KTKK 0620	15.8-29.0 [.622-1.142]	KTKK 1248	15.8-29.0 [.622-1.142]

Catalog 1654025
Revised 3-13

www.te.com

Dimensions are shown for reference purposes only. Specifications subject to change.

Dimensions are in millimeters unless otherwise specified.

USA: +1 800 522 6752
Asia Pacific: +86 0 400 820 6015
UK: +44 800 267 666

For additional support numbers please visit www.te.com

KTKK Assemblies Screened (Continued)

Pattern 608 Connectors or Connector Code 79

100S Low Fire Hazard Material

Connector Shell Size	Straight Assemblies		45° Assemblies		90° Assemblies	
	Part Number	Cable O.D. Range (mm)	Part Number	Cable O.D. Range (mm)	Part Number	Cable O.D. Range (mm)
08	KTKK 0444	5.0-7.0 [.197-.276]	KTKK 0580	5.0-7.0 [.197-.276]	—	—
10	KTKK 0445	6.0-9.0 [.236-.354]	KTKK 0581	6.0-9.0 [.236-.354]	KTKK 1021	6.0-9.0 [.236-.512]
12	KTKK 0446	7.2-11.0 [.283-.433]	KTKK 0582	7.2-11.0 [.283-.433]	KTKK 1022	7.2-11.0 [.283-.591]
14	KTKK 0447	7.2-11.0 [.283-.433]	KTKK 0583	7.2-11.0 [.283-.433]	KTKK 1023	7.2-11.0 [.283-.591]
16	KTKK 0448	8.5-17.0 [.335-.669]	KTKK 0584	8.5-17.0 [.335-.669]	KTKK 1024	8.5-17.0 [.335-.748]
18	KTKK 0449	8.5-17.0 [.335-.669]	KTKK 0585	8.5-17.0 [.335-.669]	KTKK 1025	8.5-17.0 [.335-.748]
20	KTKK 0450	10.0-21.0 [.394-.827]	KTKK 0586	10.0-21.0 [.394-.827]	KTKK 1026	10.0-21.0 [.394-.827]
22	KTKK 0451	10.0-21.0 [.394-.827]	KTKK 0587	10.0-21.0 [.394-.827]	KTKK 1027	10.0-21.0 [.394-.827]
24	KTKK 0452	15.8-29.0 [.622-1.142]	KTKK 0588	15.8-29.0 [.622-1.142]	KTKK 1028	15.8-29.0 [.622-1.142]

38999 Series III and IV Connectors or Connector Code 40- Cadmium Plated

25S Fluid Resistant Elastomer

Connector Shell Size	Straight Assemblies		45° Assemblies		90° Assemblies	
	Part Number	Cable O.D. Range (mm)	Part Number	Cable O.D. Range (mm)	Part Number	Cable O.D. Range (mm)
08	KTKK 1110	5.0-8.0 [.197-.315]	KTKK 1120	5.0-7.0 [.197-.276]	—	—
10	KTKK 1111	6.0-13.0 [.236-.512]	KTKK 1121	6.0-9.0 [.236-.354]	KTKK 1131	6.0-13.0 [.236-.512]
12	KTKK 1112	7.2-15.0 [.283-.591]	KTKK 1122	7.2-11.0 [.283-.433]	KTKK 1132	7.2-15.0 [.283-.591]
14	KTKK 1113	7.2-15.0 [.283-.591]	KTKK 1123	7.2-11.0 [.283-.433]	KTKK 1133	7.2-15.0 [.283-.591]
16	KTKK 1114	8.5-19.0 [.335-.748]	KTKK 1124	8.5-17.0 [.335-.669]	KTKK 1134	8.5-19.0 [.335-.748]
18	KTKK 1115	8.5-19.0 [.335-.748]	KTKK 1125	8.5-17.0 [.335-.669]	KTKK 1135	8.5-19.0 [.335-.748]
20	KTKK 1116	10.0-24.0 [.394-.945]	KTKK 1126	10.0-21.0 [.394-.827]	KTKK 1136	10.0-24.0 [.394-.945]
22	KTKK 1117	10.0-24.0 [.394-.945]	KTKK 1127	10.0-21.0 [.394-.827]	KTKK 1137	10.0-24.0 [.394-.945]
24	KTKK 1118	15.8-33.0 [.622-1.299]	KTKK 1128	15.8-29.0 [.622-1.142]	KTKK 1138	15.8-33.0 [.622-1.299]

100S Low Fire Hazard Material

08	KTKK 0670	5.0-7.0 [.197-.276]	KTKK 0660	5.0-7.0 [.197-.276]	—	—
10	KTKK 0671	6.0-9.0 [.236-.354]	KTKK 0661	6.0-9.0 [.236-.354]	KTKK 1181	6.0-9.0 [.236-.354]
12	KTKK 0672	7.2-11.0 [.283-.433]	KTKK 0662	7.2-11.0 [.283-.433]	KTKK 1182	7.2-11.0 [.283-.433]
14	KTKK 0673	7.2-11.0 [.283-.433]	KTKK 0663	7.2-11.0 [.283-.433]	KTKK 1183	7.2-11.0 [.283-.433]
16	KTKK 0674	8.5-17.0 [.335-.669]	KTKK 0664	8.5-17.0 [.335-.669]	KTKK 1184	8.5-17.0 [.335-.669]
18	KTKK 0675	8.5-17.0 [.335-.669]	KTKK 0665	8.5-17.0 [.335-.669]	KTKK 1185	8.5-17.0 [.335-.669]
20	KTKK 0676	10.0-21.0 [.394-.827]	KTKK 0666	10.0-21.0 [.394-.827]	KTKK 1186	10.0-21.0 [.394-.827]
22	KTKK 0677	10.0-21.0 [.394-.827]	KTKK 0667	10.0-21.0 [.394-.827]	KTKK 1187	10.0-21.0 [.394-.827]
24	KTKK 0678	15.8-29.0 [.622-1.142]	KTKK 0668	15.8-29.0 [.622-1.142]	KTKK 1188	15.8-29.0 [.622-1.142]

KTKK Assemblies Screened (Continued)

38999 Series III and IV Connectors or Connector Code 40- Ni Al Bronze

100S Low Fire Hazard Material

Connector Shell Size	Straight Assemblies		90° Assemblies	
	Part Number	Cable O.D. Range	Part Number	Cable O.D. Range
08	KTKK 2610	5.0-7.0 [.197-.276]	—	—
10	KTKK 2611	6.0-9.0 [.236-.354]	KTKK 2621	6.0-9.0 [.236-.354]
12	KTKK 2612	7.2-11.0 [.283-.433]	KTKK 2622	7.2-11.0 [.283-.433]
14	KTKK 2613	7.2-11.0 [.283-.433]	KTKK 2623	7.2-11.0 [.283-.433]
16	KTKK 2614	8.5-17.0 [.335-.669]	KTKK 2624	8.5-17.0 [.335-.669]
18	KTKK 2615	8.5-17.0 [.335-.669]	KTKK 2625	8.5-17.0 [.335-.669]
20	KTKK 2616	10.0-21.0 [.394-.827]	KTKK 2626	10.0-21.0 [.394-.827]
22	KTKK 2617	10.0-21.0 [.394-.827]	KTKK 2627	10.0-21.0 [.394-.827]
24	KTKK 2618	15.8-29.0 [.622-1.142]	KTKK 2628	15.8-29.0 [.622-1.142]

38999 Series I and II Connectors or Connector Code 41

25S Fluid Resistant Elastomer

Connector Shell Size	Straight Assemblies		90° Assemblies	
	Part Number	Cable O.D. Range	Part Number	Cable O.D. Range
08	KTKK 0500	5.0-8.0 [.197-.315]	—	—
10	KTKK 0501	6.0-13.0 [.236-.512]	KTKK 0831	6.0-13.0 [.236-.512]
12	KTKK 0502	7.2-15.0 [.283-.591]	KTKK 0832	7.2-15.0 [.283-.591]
14	KTKK 0503	7.2-15.0 [.283-.591]	KTKK 0833	7.2-15.0 [.283-.591]
16	KTKK 0504	8.5-19.0 [.335-.748]	KTKK 0834	8.5-19.0 [.335-.748]
18	KTKK 0505	8.5-19.0 [.335-.748]	KTKK 0835	8.5-19.0 [.335-.748]
20	KTKK 0506	10.0-24.0 [.394-.945]	KTKK 0836	10.0-24.0 [.394-.945]
22	KTKK 0507	10.0-24.0 [.394-.945]	KTKK 0837	10.0-24.0 [.394-.945]
24	KTKK 0508	15.8-33.0 [.622-1.299]	KTKK 0838	15.8-33.0 [.622-1.299]

100S Low Fire Hazard Material

08	KTKK 0640	5.0-7.0 [.197-.276]	—	—
10	KTKK 0641	6.0-9.0 [.236-.354]	KTKK 0721	6.0-9.0 [.236-.354]
12	KTKK 0642	7.2-11.0 [.283-.433]	KTKK 0722	7.2-11.0 [.283-.433]
14	KTKK 0643	7.2-11.0 [.283-.433]	KTKK 0723	7.2-11.0 [.283-.433]
16	KTKK 0644	8.5-17.0 [.335-.669]	KTKK 0724	8.5-17.0 [.335-.669]
18	KTKK 0645	8.5-17.0 [.335-.669]	KTKK 0725	8.5-17.0 [.335-.669]
20	KTKK 0646	10.0-21.0 [.394-.827]	KTKK 0726	10.0-21.0 [.394-.827]
22	KTKK 0647	10.0-21.0 [.394-.827]	KTKK 0727	10.0-21.0 [.394-.827]
24	KTKK 0648	15.8-29.0 [.622-1.142]	KTKK 0728	15.8-29.0 [.622-1.142]

Catalog 1654025
Revised 3-13

www.te.com

Dimensions are shown for reference purposes only. Specifications subject to change.

Dimensions are in millimeters unless otherwise specified.

USA: +1 800 522 6752
Asia Pacific: +86 0 400 820 6015
UK: +44 800 267 666

For additional support numbers please visit www.te.com

TCFS/R

Product Facts

- Screened or unscreened cables
- One-piece part
- Each size covers a wide cable range
- Light weight
- Single- or double-sided assembly

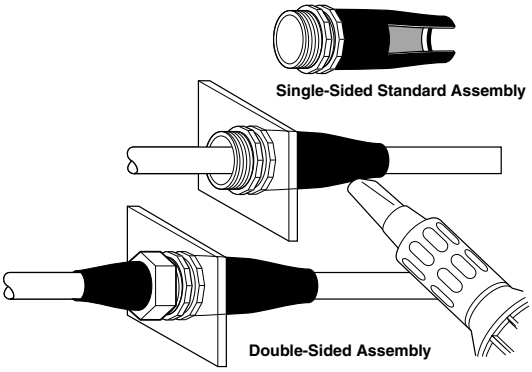

Applications

Provides environmental sealing and screen continuity to a bulkhead as a cable passes through. The assembly consists of a specifically designed locknut and O-ring seal, onto the rear of which is preinstalled a Raychem brand heat-shrinkable molded part. Feedthrough installation is simply effected by tightening the locknut on the rear of the bulkhead, which compresses the O-ring and ensures that a small knife-edge provides electrical contact between the assembly and the bulkhead.

When heat is applied to the molded part in the form of hot air, a seal to the cable is formed with hot-melt adhesive. When specified for screened cables, the assembly contains a conductive adhesive, which provides electrical continuity between the screen and the bulkhead via Rayaten molded parts.

These molded parts are shielded (screened), heat-shrinkable parts providing shielding levels better than 80 dB at 100 MHz.

Available in:	Americas	Europe	Asia Pacific
	■	■	■

Catalog 1654025
Revised 3-13

www.te.com

Dimensions are shown for reference purposes only. Specifications subject to change.

Dimensions are in millimeters unless otherwise specified.

USA: +1 800 522 6752
Asia Pacific: +86 0 400 820 6015
UK: +44 800 267 666

For additional support numbers please visit www.te.com

TCFS/R (Continued)

Part Numbering System

TCFX* - 12 62C - 0 - 20 - 100 A H

Adhesive System
E = Epoxy (consult factory)
H = S1030 hot melt
W = S1048 hot melt

Molded Part Type
A = Straight unscreened
B = 90˚ unscreened
C = Straight screened
D = 45˚ screened
E = 90˚ screened (16–36 only)

Molded Part Material
-25 = Semirigid elastomer
-100 = Low fire hazard

Thread Length
(may be three digits if more than 95 mm required)
20 mm standard
5 mm increments, minimum 15 mm

Assembly Modification Code
0 = Standard assembly
1 = Double-sided assembly (only straight unshielded boot available on double nut)
2 = Same as 1 but with potting ports
3 = Locknut
4 = 60˚ metalwork
5 = Same as 0 but with potting ports

Feedthrough Material/Finish
01W = Nickel aluminium bronze, shotblast
19B = Aluminium-alloy–plated cadmium, olive drab, over electroless nickel
19C = Aluminium-alloy–plated electroless nickel
62C = Stainless-steel–plated electroless nickel

Feedthrough Size

Part Description
TCFS uses a full-length molded part
TCFR uses a shortened molded part
(only available on straight assemblies)

*See Molded Parts Materials Section 4 for -25 and -100 information.

Catalog 1654025
Revised 3-13

www.te.com

Dimensions are shown for reference purposes only. Specifications subject to change.

Dimensions are in millimeters unless otherwise specified.

USA: +1 800 522 6752
Asia Pacific: +86 0 400 820 6015
UK: +44 800 267 666

For additional support numbers please visit www.te.com

TCFS/R (Continued)

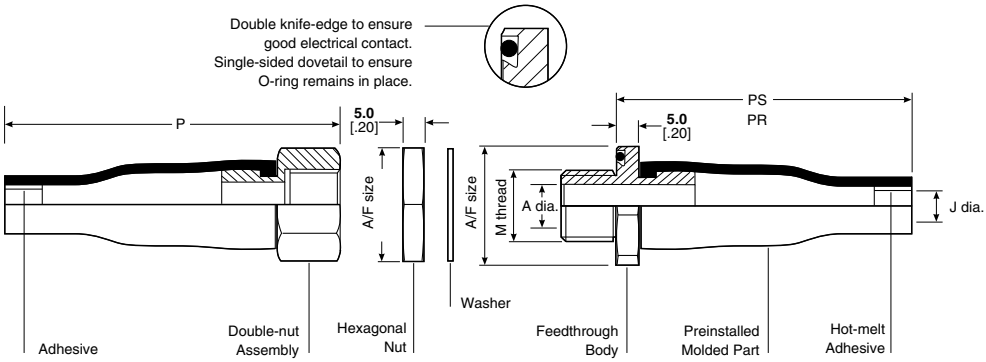

Product Dimensions

Feed-through Size	J Diameter* Unshielded a Min.	J Diameter* Unshielded b Max.	J Diameter* Shielded a Min. -25S	J Diameter* Shielded -100S	J Diameter* Shielded b Max.	M Thread	A Dia. Max.	A/F Body	A/F Nut	P ±10% Unscreened P	P ±10% Unscreened PS	P ±10% Unscreened PR	Hole Size
TCFS/R-12	11 [.43]	5.6 [.22]	7.5 [.30]	6.5 [.26]	5.0 [.20]	M12 x 1.5	7.5 [.30]	24 [.95]	17 [.67]	52	50	43	13.0 [.51]
TCFS/R-16	15 [.59]	5.9 [.23]	12.5 [.49]	8.5 [.33]	6.0 [.24]	M16 x 1.5	10.2 [.40]	29 [1.14]	22 [.87]	57	65	48	17.0 [.67]
TCFS/R-20	19 [.75]	7.1 [.28]	14.5 [.57]	10.5 [.41]	7.2 [.28]	M20 x 1.5	14.0 [.55]	34 [1.34]	27 [1.06]	61	77	52	21.0 [.83]
TCFS/R-24	23 [.90]	8.4 [.33]	18.5 [.73]	16.5 [.65]	8.5 [.33]	M24 x 1.5	19.2 [.76]	38 [1.50]	30 [1.18]	74	90	65	25.0 [.98]
TCFS/R-30	29 [1.14]	9.9 [.39]	23.5 [.93]	20.5 [.81]	10.0 [.39]	M30 x 1.5	24.2 [.95]	48 [1.89]	36 [1.48]	73	115	64	31.0 [1.22]
TCFS/R-36	35 [1.38]	15.7 [.62]	32.5 [1.28]	28.5 [1.12]	15.8 [.62]	M36 x 1.5	30.2 [1.49]	52 [2.05]	41 [1.61]	104	140	95	37.0 [1.46]
TCFR-48	45 [1.77]	16.8 [.66]	38.5 [1.52]	35.5 [1.40]	N/A	M48 x 1.5	40.2 [1.58]	67 [2.64]	55 [2.17]	144	110	135	50.0 [1.97]

*a = Supplied dimension
b = Dimension after free recovery

Catalog 1654025
Revised 3-13

www.te.com

Dimensions are shown for reference purposes only. Specifications subject to change.

Dimensions are in millimeters unless otherwise specified.

USA: +1 800 522 6752
Asia Pacific: +86 0 400 820 6015
UK: +44 800 267 666

For additional support numbers please visit www.te.com

S1030, S1048, S1275 (Rayaten)

Product Characteristics

S1030 Polyolefin Hot-Melt Adhesive	
Precoat designation	/180
Type	Polyolefin hot-melt adhesive
Operating temperature range	-80°C to 80°C [-112°F to 176°F]
Bonding temperature	120°C [248°F]
Minimum shelf life at or below 25°C	4 years
Specification	RK-6017, RT-1050/6
Comments	Excellent water blocking and low temperature

S1048 HIgh-Performance Hot-Melt Adhesive	
Precoat designation	/86
Type	High-performance hot-melt adhesive
Operating temperature range	-55°C to 120°C [-67°F to 248°F]
Bonding temperature	160°C [320°F]
Minimum shelf life at or below 25°C	4 years
Specification	RK-6626, RT-1050/3
Comments	Good solvent resistance but requires higher temperature to achieve bonding. Post heating required. Contact TE.

S1275 Rayaten Conductive Adhesive* (for KTKK assemblies only)	
Type	Electrically conductive polyamide hot-melt adhesives
Operating temperature range	-40°C to 70°C [-40°F to 158°F]
Bonding temperature	160°C [320°F]
Minimum shelf life at or below 25°C	2 years
Specification	RK-6637
Comments	Conductive adhesive for use with Rayaten parts

*Not sold separately.

Available in:	Americas	Europe	Asia Pacific
	■	■	■

Catalog 1654025
Revised 3-13

www.te.com

Dimensions are shown for reference purposes only. Specifications subject to change.

Dimensions are in millimeters unless otherwise specified.

USA: +1 800 522 6752
Asia Pacific: +86 0 400 820 6015
UK: +44 800 267 666

For additional support numbers please visit www.te.com

SESK — Shipboard Electrical Splice Kits

Product Facts

- Waterproofing and corrosion proofing
- Standard sizes that cover most single-, two-, three-, four-, and multi-conductor cables
- Excellent electrical-insulation properties and abrasion protection
- Easy installation
- Operating temperature range of -55°C to +90°C [-67°F to +194°F]
- Approved for new ship construction

Applications

SESK kits provide fast, waterproof repair of single-, two-, three-, four-, and multi-conductor cables. Kits are suitable for both permanent and temporary repairs. The self-sealing heat-shrinkable tubing used in each kit provides a watertight seal for the inner insulation and outer jacket. The flame-retardant tubing material provides electrical and thermal properties similar to those of most Navy standard cables.

Installation

Minimum shrink temperature: 121°C [250°F]

Specifications/Approvals

Series	Military	Industry	Agency	TE
SESK	MIL-DTL-23053*	IEEE-383 Massive Flame Vertical Tray Test	Lloyd's Register	—
	USCG CGHQ-3774	SST-FR	DNV	—
	U.S. Navy drawing 5001027-19	RW-2011	ABS	—
Tubing used to replace cable jacket	SST-FR	SST-FR	—	Sigmaform FR
	—	—	SST-FR	RW-2011

*Formerly MIL+23053/15A

Note: SESK kits are able to handle a variety of cable sizes and are also available for UJIS cables. Please contact TE for details and part number availability.

Available in:	Americas	Europe	Asia Pacific
	■	■	■

Catalog 1654025
Revised 3-13

www.te.com

Dimensions are shown for reference purposes only. Specifications subject to change.

Dimensions are in millimeters unless otherwise specified.

USA: +1 800 522 6752
Asia Pacific: +86 0 400 820 6015
UK: +44 800 267 666

For additional support numbers please visit www.te.com

Ship or Shore Breakout Kits

Product Facts

- **Heat-shrinkable boot replaces potting or molding**
- **Flame-retardant tubing has a 3:1 shrink ratio**
- **Kit offers resistance to moisture, fungus, and weathering**
- **Operating temperature range of -55°C to +90°C [-67°F to +194°F]**

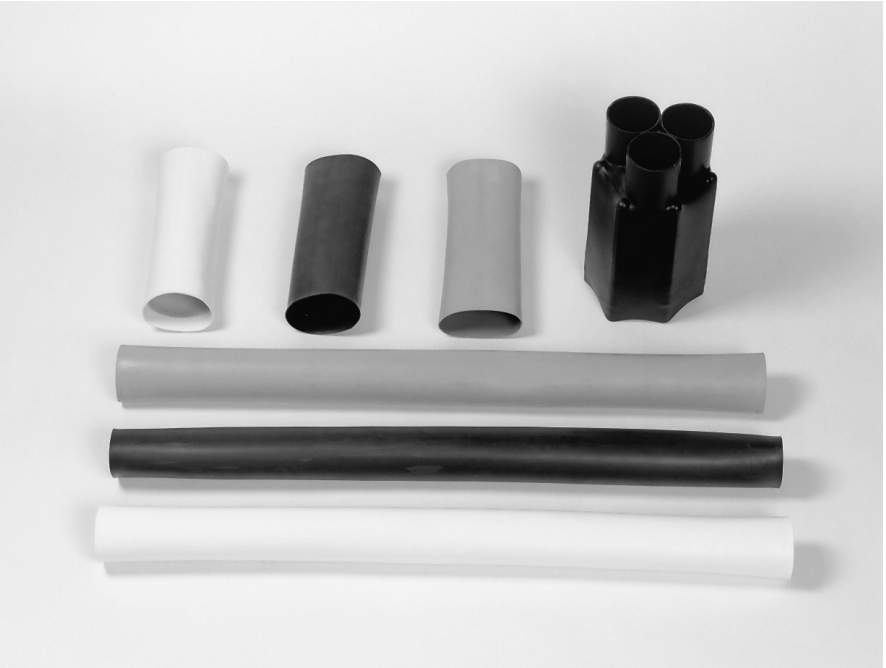

Applications

Waterproof splices for power cables are available in red, white, and black for positive identification of each conductor.

Bolting power cables together and wrapping the splice with tape used to be the accepted method. Now the in-line splice—with thick-wall, self-sealing, heat-shrinkable products—is the accepted system for strain relief, environmental sealing, and phase identification for power cables. Tubing accommodates a large difference between cable diameters. Sigmaform boots can replace tapes, epoxies, and dips.

Installation

Minimum shrink temperature: 121°C [250°F]

Specifications/Approvals

Series	Military	Industry
2E171-4	NAVSEA 803-5001027-17	DNV
	MIL-C-24368	Lloyd's
	MIL-DTL-23053/15* and MIL-I-81765/1	ABS

Ordering Information

Part No.	Model
2E171-4	In-line splice cable sealing kit**

**Each kit contains:
- Cable breakout boot
- Three-phase identification tubings (red, white, and black)
- Three connector tubings
- A #100 grit emery cloth
- Installation instructions

Available in:	Americas	Europe	Asia Pacific
	■	■	■

Catalog 1654025
Revised 3-13

www.te.com

Dimensions are shown for reference purposes only. Specifications subject to change.

Dimensions are in millimeters unless otherwise specified.

USA: +1 800 522 6752
Asia Pacific: +86 0 400 820 6015
UK: +44 800 267 666

For additional support numbers please visit www.te.com

Custom Maintenance and Repair Kits

Product Facts

- Customizable to specific platforms (including drawings and instructions)
- Custom sub-assemblies for quick repair
- Designed for use in the field or at a depot
- Lightweight case for easy transportation
- Tooling is available
- Replenishment of parts through re-ordering is available

TE offers Maintenance and Repair Kits that contain all the necessary items required to perform repairs in the field or at a depot.

Typical products include (and are not limited too) the following shown below and on page 7-13.

Applications include: Ship Maintenance, Ground Vehicles and Helicopters

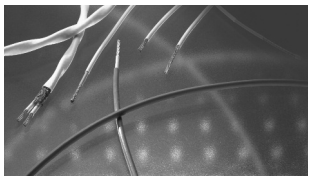

Wire, Cable and Cable Assemblies
- Flat
- Coax
- Power
- more....

Heat-Shrink Tubing
- Single Wall
- Dual Wall
- Flame Retardant
- more....

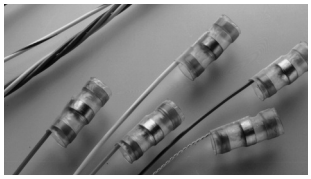

Shield Terminators and Adapters
- Cable Terminators
- HexaShield Adapters
- Tinel-Lock Ring
- more....

Data Bus and MTC Products
- Data Bus Cables
- Couplers
- Bus and Stub Terminators
- more....

Dimensions are shown for reference purposes only. Specifications subject to change.

Dimensions are in millimeters unless otherwise specified.

USA: +1 800 522 6752
Asia Pacific: +86 0 400 820 6015
UK: +44 800 267 666

For additional support numbers please visit www.te.com

Custom Maintenance and Repair Kits (Continued)

Typical Products

Connectors
- Military Circular
- ARINC
- RF Coax
- more....

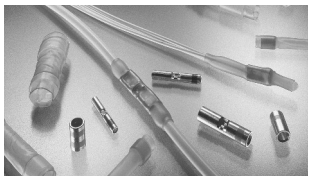

Terminals, Contacts and Splices
- SolderTacts Solder Contacts
- Lugs
- MiniSeal Crimp Splices
- more....

Molded and Harnessing Products
- RayOLOn Kits
- Heat Shrinkable Repair Tape
- Adhesive and Sealing Products
- more....

Tooling Products
- Wire Stripper
- Cutters
- Heat Guns
- more....

Creating the Kit

Since each kit is a custom piece, our goal is to ensure that the finished kit becomes an indispensible unit for quick repair out in the field or at a depot. We do this by spending time with you to determine the purpose of the kit and how it will be used. All components of the kit will meet your required standards. Prototypes will be built based on your requirements and the recommendations of our Technical Group.

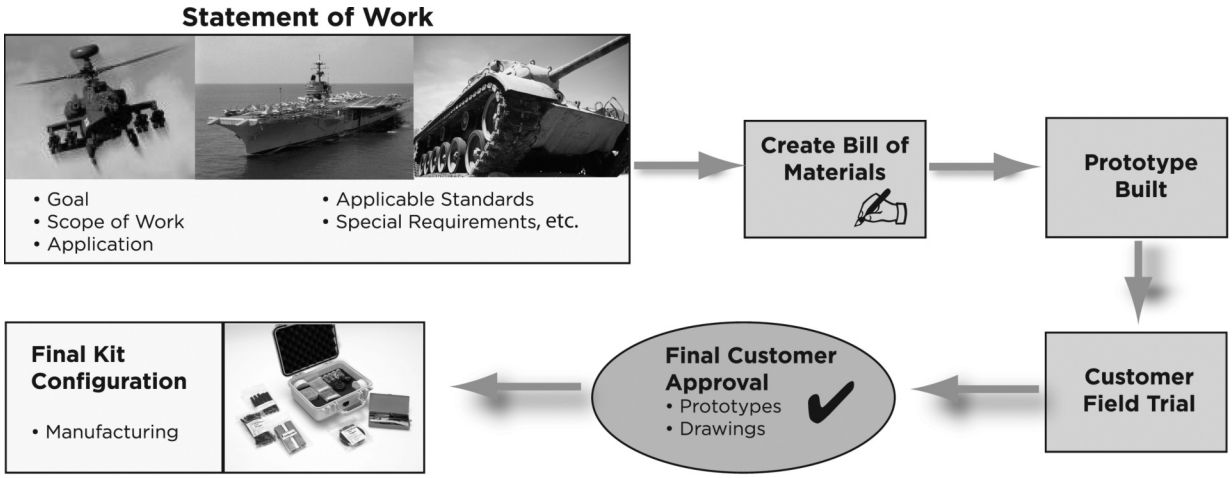

Catalog 1654025
Revised 3-13

www.te.com

Dimensions are shown for reference purposes only. Specifications subject to change.

Dimensions are in millimeters unless otherwise specified.

USA: +1 800 522 6752
Asia Pacific: +86 0 400 820 6015
UK: +44 800 267 666

For additional support numbers please visit www.te.com

Custom Maintenance and Repair Kits (Continued)

Completing the Kit

With our design experience in building this type of kit, TE will work with you to propose a kit to fit your specific requirements. This includes customer specified bill of materials and flexible contents.

Items are clearly marked for easy access.

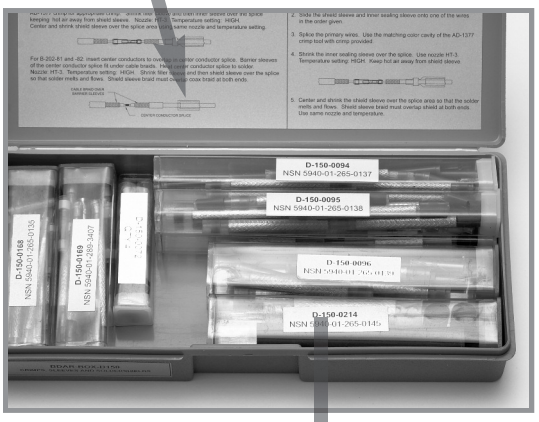

Dimensions are shown for reference purposes only. Specifications subject to change.

Dimensions are in millimeters unless otherwise specified.

USA: +1 800 522 6752
Asia Pacific: +86 0 400 820 6015
UK: +44 800 267 666

For additional support numbers please visit www.te.com

Raychem Marine High-Voltage Termination & Splice Kits

Product Facts

- Designed and tested to IEEE-48 and IEEE-404 standards
- Superior environmental sealing
- Polyolefin heat shrink sleeve
- Compact design
- Tough, abrasion resistant, industry proven materials
- Excellent electrical stress control
- Easy to follow installation instructions
- Easier to install in confined spaces (Cold applied kits)

Description

Marine high-voltage termination and splice kits provide a safe, simple and secure way to terminate both water and non-water blocked cables rated up to 15KV. These kits have been designed to be watertight and feature non-tracking insulation with a revolutionary new electrical stress control system. They are high performing with a history of use in industrial applications.

Applications

Ideal for a broad range of applications, utilizing commecial and military marine high voltage cables. The marine high voltage kits offer mechanical strength, water tight sealing and the ability to withstand extreme environments.

MHXX - XXKV

Kit Type
- MHHT (Heat Shrink Termination)
- MHHS (Heat Shrink Splice)
- MHCT (Cold Applied Termination)
- MHCS (Cold Applied Splice)

Voltage
- -8KV (0-8KV)
- -15KV (0-15KV)

Phase Conductor Insulation Diameter
- -1 (.64 - .95 in.)
- -2 (.95 - 1.25 in.)
- -3 (1.10 - 1.65 in.)
- -4 (.60 - 1.40 in.) (Cold applied splice only)

Number Of Phase Conductors
- -1
- -3
- -4

Number Of Ground Conductors
- -0
- -3
- -4

Type Of Shield
- -G (Gross Shield)
- -PS (Phase Shield/Semi-Con & Gross Shield)

Notes:
1. Recommended overall cable insulation diameter range (1.30 - 3.50 in.)
2. Choose the largest size available that will fit your cable.

Catalog 1654025
Revised 3-13

www.te.com

Dimensions are shown for reference purposes only. Specifications subject to change.

Dimensions are in millimeters unless otherwise specified.

USA: +1 800 522 6752
Asia Pacific: +86 0 400 820 6015
UK: +44 800 267 666

For additional support numbers please visit www.te.com

Raychem Marine High-Voltage Termination & Splice Kits (Continued)

Heat Shrink Kits

MHHT

Marine High-Voltage Heat Shrink Termination Kits (0–15 kV)

The unique high-voltage insulating sleeve is a non-tracking, and erosion-resistant material that does not require periodic cleaning. The material properties have been formulated to be thermally stable and highly resistant to UV degradation, weathering and environmental pollution.

The cable, along with external ground, is sealed from moisture ingress using our high-voltage, heat-activated sealing system. No field engineering or additional accessory kits are required.

Rated to IEEE-48 class 1. Indoor (in enclosures) or outdoor (weather-exposed) use. For use on shielded, non-shielded, water blocked or non-water blocked marine cables.

MHHT kits offer the following features and benefits:

- Heat-shrinkable terminations with built-in stress control
- Easy installation
- Rated to IEEE-48-1996, class 1 termination requirements
- Seals out all moisture and contamination and complies to MIL-24640 leakage requirements

Heat-Shrinkable Terminations with Built-In Stress Control

This high voltage termination system features a co-extruded one-piece termination. It consists of the same proven non-tracking tube together with a co-extruded, built-in stress control grading layer. This stress control layer is based on ceramic semi-conductor technology (ZnO) and provides superior discharge and impulse performance. When the tubing is shrunk down, the coating softens and sticks to irregular surfaces, providing moisture seals as well as electrical stress control.

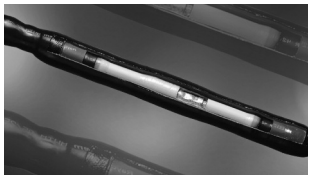

MHHS

Marine High-Voltage Heat Shrink Splice Kits (0-15 kV)

The heat-shrinkable shielded power cable splices are pre-engineered to offer a compact, low-profile installation with a minimum diameter buildup. The kits contain a solderless grounding kit, consisting of a ground clamp, a ground braid, and a shielding mesh. Heat-shrink feature allows the kits to accommodate out-of-round, out-of-spec cable.

Cold Applied Kits

MHCT

Marine High-Voltage Cold Applied Termination Kits (0-15 kV)

MHCT tool-free termination kits have been developed to provide a quick and easy, cold-applied method of terminating 0-15 kV polymeric cables. The MHCT's are designed for indoor conditions.

MHCT kits offer the following features and benefits:

- Advanced metal oxide matrix stress control
- Positive placement of stress control patch
- Provided on a crush-resistant core
- Easy installation — allows for repositioning
- Rated to IEEE-48-1996, class 1 termination requirements
- Seals out moisture and contamination, up to 15 psi of water pressure

MHCS

Marine High-Voltage Cold Applied Splice Kits (0-15 kV)

Cold-applied splice is designed to splice medium voltage cables without the use of a torch or heat gun. The splice consists of a pre-stretched body on a unique holdout design together with a built-in-place Faraday cage. The kit contains integrated sock-type shielding mesh and solderless spring clamps to accommodate different types of metallic shields such as Copper Tape, LC, Flat Strap and others. The re-jacketing system is a wraparound GelWrap splice closure designed to seal the entire splice area and provide mechanical and environmental protection.

Dimensions are shown for reference purposes only. Specifications subject to change.

Dimensions are in millimeters unless otherwise specified.

USA: +1 800 522 6752
Asia Pacific: +86 0 400 820 6015
UK: +44 800 267 666

For additional support numbers please visit www.te.com

Table of Contents

Introduction 8-2
Typical SolderSleeve Device/Installation 8-3
Product Selection 8-3, 8-4

Wire-to-Wire Splicing
- Introduction 8-5
- SolderSleeve Wire Splices . . . . . .8-6 to 8-11
- SolderGrip Closed End Connector Splices . . . . . .8-12 to 8-17
- DuraSeal Heat-Shrinkable, Environmentally-Sealed, Nylon-Insulated Crimp Splices 8-18, 8-19
- PolyCrimp Heat-Shrinkable Polyethylene Crimp Splices 8-20, 8-21
- Cold Applied Splices 8-22, 8-23
- MiniSeal High-Performance, Immersion-Resistant Crimp Splices . . . . . .8-24 to 8-27
- 200˚C MiniSeal High-Performance Crimp Splices 8-28, 8-29

Insulated Terminals and Disconnects
- Introduction 8-30
- DuraSeal Heat-Shrinkable, Environmentally-Sealed, Nylon-Insulated Crimp Terminals and Disconnects . . . . . .8-31 to 8-36
- SolderGrip Self-Fixturing Insulated Terminals . . . . . .8-37 to 8-41

Wire Termination to Pin/Post/Tab
- Introduction 8-42
- SolderSleeve Discrete Wire Terminators . . . . . .8-43 to 8-46

Shield Termination
- Introduction 8-47
- SolderSleeve Shield Terminators . . . . . .8-48 to 8-53

Coaxial Cable Termination
- Introduction 8-54
- SolderSleeve Coaxial Cable Terminators 8-55, 8-56
- SolderSleeve PCB/Coaxial Cable Terminators 8-57, 8-58
- RF One-Step BNC/TNC Connectors . . . . . .8-59 to 8-64

Cable-to-Cable Splicing
- Introduction 8-65
- SolderShield Shielded and Coaxial Cable Splices . . . . . .8-66 to 8-69
- Raychem C-Wrap Side Entry Repair Sleeve 8-70, 8-71

Shielded Contacts
- Introduction 8-72
- SolderTacts shielded one-piece solder contacts . . . . . .8-73 to 8-81

Data Bus (MIL-STD-1553B) Components
- Introduction 8-82
- Cables 8-83, 8-84
- In-Line Microcouplers: One- and Two- Stub . . . . . .8-85 to 8-87
- Ultra Lightweight In-Line Microcouplers 1- Through 6-Stub . . . . . .8-88 to 8-90
- Box Couplers 8-91, 8-92
- Discrete Connectors 8-93, 8-94
- Accessories . . . . . .8-95 to 8-99
- Triaxial Size 8 Contacts 8-100
- Space-Grade Data Bus Components . . . . . .8-101 to 8-104
- Customer-Specified Harness Assemblies and HarnWare 8-105
- Parts List 8-105

Note: Users should independently evaluate the suitability of the product for their application. Before ordering, check with TE Connectivity for most current data.

Catalog 1654025
Revised 3-13

www.te.com

Dimensions are shown for reference purposes only. Specifications subject to change.

Dimensions are in millimeters unless otherwise specified.

USA: +1 800 522 6752
Asia Pacific: +86 0 400 820 6015
UK: +44 800 267 666

For additional support numbers please visit www.te.com

Table of Contents (Continued)

Introduction

TE's dependable, economical wire and cable termination products provide solutions for hundreds of wire and cable interconnect requirements. All wire termination products are housed inside transparent heat-shrinkable insulation sleeves, which provide inspectability and can provide various levels of environmental protection. Most Raychem brand termination products incorporate a fluxed solder preform, which is essential for a highly controlled soldering process. Other products incorporate controlled crimping or a unique process of combining a twist-on coil with controlled soldering to provide high-reliability joints on the widest variety of conductor types and platings.

SolderSleeve technology ensures high-quality electrical and mechanical performance time after time. Premeasured solder and flux create repeatable, reliable terminations, reducing rejects and field failures. When the SolderSleeve device is heated, the tubing shrinks and the solder preform melts to make a fully insulated, strain-relieved, protected solder connection. Heat-shrinkable tubing provides the benefits of insulation, strain relief, and protection for our controlled crimp products. Many Raychem brand interconnect products have earned UL recognition or MIL-Spec approval.

Many SolderSleeve and related devices are made from polyvinylidene fluoride tubings that meet the requirements of AMS-DTL-23053/8 (formerly MIL-DTL-23053/8).

Raychem brand interconnect devices combine high-strength materials with innovative design for consistent, long-life performance. And because the insulation sleeve is transparent, operators can easily inspect the connection.

TE shrink-to-fit technology even helps reduce inventory, because one device size will fit a wide range of wire gauges, cable diameters, and component shapes.

TE interconnect products are designed for many applications, from simple splices to terminators for sophisticated electronic systems, either sealed or unsealed, and for high- or low-temperature environments.

Product Selection

Typical SolderSleeve Device (illustration of shield terminator concept)

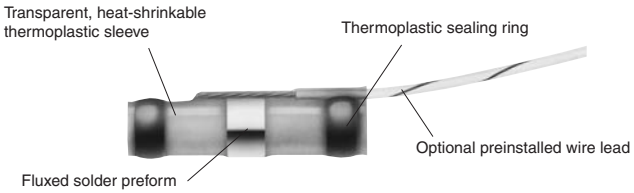

Typical Installation

1. Insert prepared cable

2. Apply heat

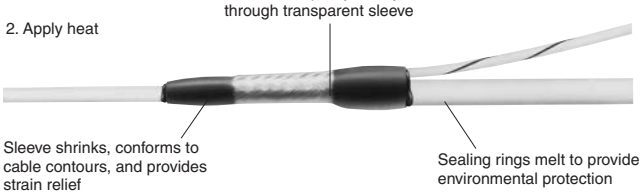

Application Type	Max. Operating Temp.	Connection Type	Product Description	Series	Page Number
Wire-to-wire splicing	125°C [257°F]	Solder	SolderSleeve wire splices	B-155-900X CWT	8-6
	150°C [302°F]	Solder	SolderSleeve wire splices	D-110, D-1744	8-6
	125°C [257°F]	Coil and solder	SolderGrip closed end connector splices (stub)	SGRP Series X-58, SGRS	8-12
	125°C [257°F]	Crimp	DuraSeal crimp splices	D-406	8-18
	125°C [257°F]	Crimp	PolyCrimp wire splices	C-203	8-20
	150°C [302°F]	Crimp	MiniSeal crimp splices	D-436 (M81824)	8-24
	200°C [392°F]	Crimp	MiniSeal crimp splices	D-200	8-28
Terminals and disconnects	125°C [257°F]	Crimp	DuraSeal crimp terminals and disconnects	B-106	8-31
	150°C [302°F]	Coil and solder	SolderGrip terminals	SGRT	8-37
Wire termination to pin/post/tab	125°C [257°F]	Solder	SolderSleeve wire terminators	B-155-15XX	8-43
	150°C [302°F]	Solder	SolderSleeve wire terminators	D-129, D-141, D-71X	8-43
Shield termination	125°C [257°F]	Solder	SolderSleeve shield terminators	B-155-X	8-48
	150°C [302°F]	Solder	SolderSleeve shield terminators	S01, S02, M83519, SO63	8-48
	175°C [347°F]	Solder	SolderSleeve shield terminators	SO96, SO175	8-48
	200°C [392°F]	Solder	SolderSleeve shield terminators	S200	8-48
Coaxial cable termination	125°C [257°F]	Solder	SolderSleeve coaxial cable terminators	B-155	8-55
	150°C [302°F]	Solder	SolderSleeve coaxial cable terminators	B-02X, B-04X	8-55
	150°C [302°F]	Solder	SolderSleeve PCB/coaxial cable terminators	D-607, B-046	8-57
	135°C [275°F]	Solder	RF one-step BNC/TNC connectors	RBD, RTD	8-59
Cable-to-cable splicing	150°C [302°F]	Solder/Crimp	SolderShield cable splices	D-150	8-66
Shielded contacts	150°C [302°F]	Solder	SolderTacts shielded contacts	D-602	8-71
Triax connectors	150°C [302°F]	Solder	Triax discrete connectors	D-621, DK-621	8-91
MIL-STD-1553	150°C [302°F]	Solder	Triax discrete connectors	D-621, DK-621	8-91
Data bus connectors	150°C [302°F]	Solder	Triax discrete connectors	D-621, DK-621	8-91
MIL-STD-1553 In-line couplers	150°C [302°F]	Solder or connectorized	In-line data bus microcoupler	D-500-04	8-83
MIL-STD-1533	150°C [302°F]	Connectorized	Data bus box couplers	D-500-025	8-89
Triaxial size 8 contacts	150°C [302°F]	Solder	Size 8, triaxial MIL-C-38999 contacts	D-602X, DK-602	8-98
Data bus cables	150°C [302°F]	Crimp or solder	MIL-STD-1553 B shielded cable	1061X	8-81
Data bus terminators	150°C [302°F]	Solder or connectorized	MIL-STD-1553 78 Ohms and 3000 Ohms terminators	D-621, D-500	8-93
Data bus accessories	150°C [302°F]	Solder or mechanical	Dust caps, braid terminators, splices	D-600, D-150	8-93

Catalog 1654025
Revised 3-13

www.te.com

Dimensions are shown for reference purposes only. Specifications subject to change.

Dimensions are in millimeters unless otherwise specified.

USA: +1 800 522 6752
Asia Pacific: +86 0 400 820 6015
UK: +44 800 267 666

For additional support numbers please visit www.te.com

Product Selection (Continued)

Application Type	Connection Type	Max. Operating Temp.	Product Description	Series	Page Number
Wire-to-Wire Splicing	Solder	125°C	SolderSleeve wire splices	B-155-900X	8-6
		150°C	SolderSleeve wire splices	D-110, D-1744	8-6
	Crimp	125°C	DuraSeal crimp splices	D-406	8-18
		125°C	PolyCrimp crimp splices	C-203	8-20
		150°C	Cold applied splices	D-436	8-22
		150°C	MiniSeal crimp splices	D-436 (M81824)	8-24
		200°C	MiniSeal crimp splices	D-200	8-28
	Coil and Solder	125°C	SolderGrip closed end connector splices (stub)	SGRP, SGRS SGRW-X-58	8-12
Terminals and Disconnects	Crimp	125°C	DuraSeal crimp terminals and disconnects	B-106	8-31
	Coil and Solder	150°C	SolderGrip terminals	SGRT	8-37
Wire Termination to pin/post/tab	Solder	125°C	SolderSleeve wire terminators	B-155-15XX	8-43
		150°C	SolderSleeve wire terminators	D-129, D-141, D-71X	8-43
Shield Termination	Solder	125°C	SolderSleeve shield terminators	B-155-X	8-48
		150°C	SolderSleeve shield terminators	S01, S02, M83519, SO63	8-48
		175°C	SolderSleeve shield terminators	SO96, SO175	8-48
		200°C	SolderSleeve shield terminators	S200	8-48
Coax Cable Termination	Solder	125°C	SolderSleeve coaxial cable terminators	B-155-4XXX	8-55
		135°C	RF one-step BNC/TNC connector	RBD, RTD	8-59
		150°C	SolderSleeve coaxial cable terminators	B-02X/04X	8-55
			SolderSleeve PCB/coaxial cable terminators	D-607, B-046	8-57
Cable-to-Cable Splicing	Solder/Crimp	150°C	SolderShield cable splices	D-150, B-202	8-66
Shielded Contacts	Solder	150°C	SolderTacts shielded contacts	D-602	8-71
MIL-STD-1553B Data Bus Components	Solder	150°C	Data bus couplers, connectors, terminators, accessories	D-500, D-600, D(K)-621	8-80

Catalog 1654025
Revised 3-13

www.te.com

Dimensions are shown for reference purposes only. Specifications subject to change.

Dimensions are in millimeters unless otherwise specified.

USA: +1 800 522 6752
Asia Pacific: +86 0 400 820 6015
UK: +44 800 267 666

For additional support numbers please visit www.te.com

Introduction

TE offers many products for wire-to-wire splicing: SolderSleeve splicing devices; SolderGrip splices; and DuraSeal and MiniSeal crimp splices.

Like all TE interconnect products, the wire-to-wire splicing devices are rugged and reliable, yet easy to install.

Designed for applications with temperatures up to 150°C [302°F], products in this section include:

- SolderSleeve splicing devices, which can be used to make sealed or unsealed splices. In a single step, they solder, insulate, encapsulate, and strain-relieve a wide range of wire sizes.
- DuraSeal heat-shrinkable nylon crimp splices are easy to use in factory or repair applications. DuraSeal crimp splices provide watertight sealing and superior protection against corrosion, abrasion, and vibration.
- Small, lightweight, and low-profile MiniSeal high-performance crimp splices, which substantially reduce wire bundle size and weight, are QPL-listed to the MIL-S-81824 specification, and are required by the MIL-W-5088 specification.
- SolderGrip splices, which are closed-end connectors utilizing a spiral copper coil that grips and compresses the conductors and allows a prefluxed solder ring to flow to the center of the splicing area, resulting in a high-reliability, repeatable solder joint.
- PolyCrimp heat-shrinkable polyethylene crimp splices offer a one-piece design and translucent tubing which allows for visual inspection of the splice. The dual wall polyethylene tubing provides strain relief and protection against the environment.

Catalog 1654025
Revised 3-13

www.te.com

Dimensions are shown for reference purposes only. Specifications subject to change.

Dimensions are in millimeters unless otherwise specified.

USA: +1 800 522 6752
Asia Pacific: +86 0 400 820 6015
UK: +44 800 267 666

For additional support numbers please visit www.te.com

SolderSleeve Wire Splices

Product Facts

- **Transparent polyvinylidene fluoride or polyolefin sleeve provides encapsulation, inspectability, strain relief, and insulation**
- **Prefluxed solder preform provides a controlled soldering process**
- **One-piece design makes installation easy and lowers the installed cost**
- **With one or two wires per end, the NAS 1744 splices meet 75,000 ft [22,000 m] altitude immersion requirement**
- **Thermochromic temperature indicator in the NAS splices facilitates termination and inspection**
- **UL and CUL recognized**

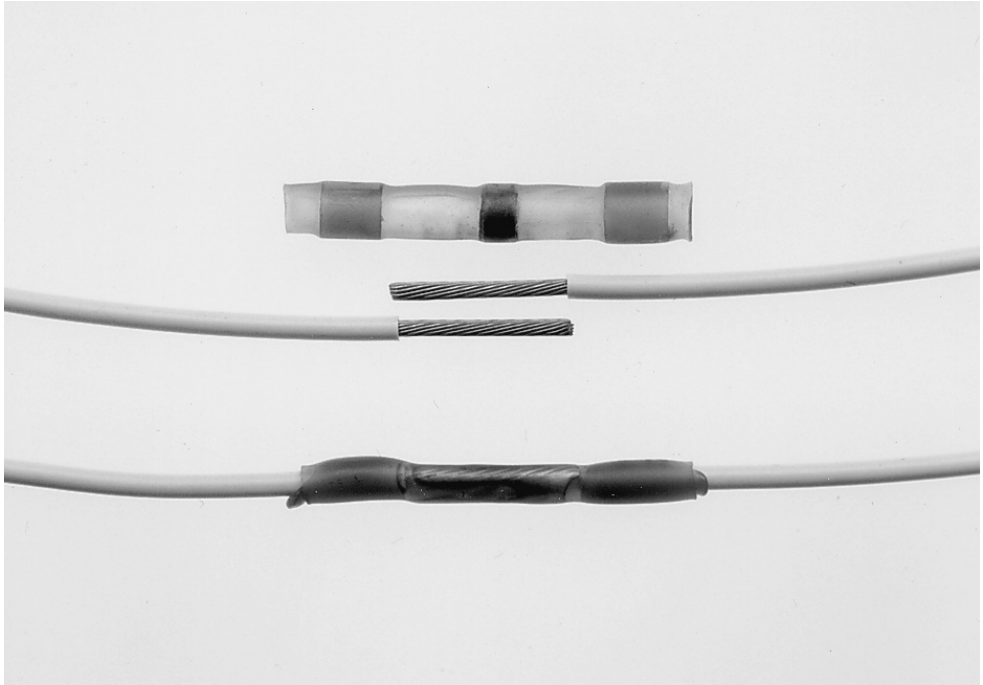

Applications

In-line wire splices.

Product Options

Product Series	Minimum Wire Temperature Rating	Maximum Operating Temperature	Intended Application Environment
B-155	85°C [185°F]	125°C [257°F]	(RoHS) Splashproof
CWT	85°C [185°F]	125°C [257°F]	Splashproof
D-110	125°C [257°F]	150°C [302°F]	Splashproof
D-1744 (NAS 1744)	125°C [257°F]	150°C [302°F]	Immersion sealed

Note: Cadmium-free option (B-152 series) is available for operating temperature of 125˚C [257˚F]. Consult TE for details.

Product Selection Process

From the Product Options table above, select the product series appropriate for your application based on the temperature rating and sealing performance required.

If the application has only one size of wire per side and no more than two wires on either side:

1. Determine wire gauge sizes for both sides of splice.
2. Determine number of wires (one or two wires) for each side of splice.
3. Select part numbers from the appropriate table:
   - For B-155 and CWT series (low temperature): Use Table A on page 8-7.
   - For D-110 series (splashproof): Use Table B on page 8-8.
   - For D-1744 series (immersion sealed): Use Table C on page 8-9.

If the application has more than one size of wire per side or more than two wires on either side (or if you prefer to work with CMA or mm^2 sizes):

1. Turn to "CMA/mm^2 Calculation" on page 8-10 and use the workspace there to calculate the total cross section to be spliced.
2. Use Table E on page 8-11 to select the sleeve recommended for that cross section.

Notes:

While all combinations listed will provide satisfactory solder joints, the degree of strain relief obtained depends on the outer diameter of the wires being joined. Refer to Table E for the recommended size ranges for the sleeves.

Wires 16 AWG (1.21 mm^2) and larger, and wires having more than 19 strands, should be pretinned prior to splicing, to obtain the optimum solder joint quality.

Part selection for wires 26 AWG (0.15 mm^2) and smaller is covered on page 8-8.

Available in:	
Americas	■
Europe	■
Asia Pacific	■

Dimensions are shown for reference purposes only. Specifications subject to change.

Dimensions are in millimeters unless otherwise specified.

USA: +1 800 522 6752
Asia Pacific: +86 0 400 820 6015
UK: +44 800 267 666

For additional support numbers please visit www.te.com

Table A: B-155 Series Selection

SolderSleeve Wire Splices (Continued)

Side A: Size and Number of Conductors		Side B: 26 AWG 1	26 AWG 2	24 AWG 1	24 AWG 2	22 AWG 1	22 AWG 2	20 AWG 1	20 AWG 2
26 AWG	1	B-155-9001	B-155-9001	B-155-9001	B-155-9001	B-155-9001	B-155-9002	B-155-9002	B-155-9002
	2	B-155-9001	B-1559001	B-155-9001	B-155-9002	B-155-9001	B-155-9002	B-155-9002	B-155-9002
24 AWG	1	B-155-9001	B-155-9001	B-155-9001	B-155-9001	B-155-9001	B-155-9002	B-155-9002	B-155-9002
	2	B-155-9001	B-155-9002	B-155-9001	B-155-9002	B-155-9002	B-155-9002	B-155-9002	B-155-9002
22 AWG	1	B-155-9001	B-155-9001	B-155-9001	B-155-9002	B-155-9002	B-155-9002	B-155-9002	B-155-9002
	2	B-155-9002	B-155-9002	B-155-9002	B-155-9002	B-155-9002	B-155-9002	B-155-9002	B-155-9003
20 AWG	1	B-155-9002	B-155-9002	B-155-9002	B-155-9002	B-155-9002	B-155-9002	B-155-9002	B-155-9003
	2	B-155-9002	B-155-9002	B-155-9002	B-155-9002	B-155-9002	B-155-9003	B-155-9003	B-155-9003
18 AWG	1	B-155-9002	B-155-9002	B-155-9002	B-155-9002	B-155-9002	B-155-9002	B-155-9002	B-155-9003
	2	B-155-9003	B-155-9003	B-155-9003	B-155-9003	B-155-9003	B-155-9003	B-155-9003	B-155-9003
16 AWG	1	B-155-9002	B-155-9002	B-155-9002	B-155-9002	B-155-9002	B-155-9003	B-155-9003	B-155-9003
	2	B-155-9003	B-155-9003	B-155-9003	B-155-9003	B-155-9003	B-155-9003	B-155-9003	B-155-9003
14 AWG	1	B-155-9003	B-155-9003	B-155-9003	B-155-9003	B-155-9003	B-1559003	B-155-9003	B-155-9003
	2	B-155-9004	B-155-9004	B-155-9004	B-155-9004	B-155-9004	B-155-9004	B-155-9004	B-155-9004
12 AWG	1	B-155-9003	B-155-9003	B-155-9003	B-155-9003	B-155-9003	B-155-9003	B-155-9003	B-155-9004
	2	B-155-9005	B-155-9005	B-155-9005	B-155-9005	B-155-9005	B-155-9005	B-155-9005	B-1559005
10 AWG	1	B-155-9005	B-155-9005	B-155-9005	B-155-9005	B-155-9005	B-155-9005	B-155-9005	B-155-9005

Side A: Size and Number of Conductors		Side B: 18 AWG 1	18 AWG 2	16 AWG 1	16 AWG 2	14 AWG 1	14 AWG 2	12 AWG 1	12 AWG 2	10 AWG 1
26 AWG	1	B-155-9002	B-155-9003	B-155-9002	B-155-9003	B-155-9003	B-155-9004	B-155-9003	B-155-9005	B-155-9005
	2	B-155-9002	B-155-9003	B-155-9002	B-155-9003	B-155-9003	B-155-9004	B-155-9003	B-155-9005	B-155-9005
24 AWG	1	B-155-9002	B-155-9003	B-155-9002	B-155-9003	B-155-9003	B-155-9004	B-155-9003	B-155-9005	B-155-9005
	2	B-155-9002	B-155-9003	B-155-9002	B-155-9003	B-155-9003	B-155-9004	B-155-9003	B-155-9005	B-155-9005
22 AWG	1	B-155-9002	B-155-9003	B-155-9002	B-155-9003	B-155-9003	B-155-9004	B-155-9003	B-155-9005	B-155-9005
	2	B-155-9002	B-155-9003	B-155-9003	B-155-9003	B-155-9003	B-155-9004	B-155-9003	B-155-9005	B-155-9005
20 AWG	1	B-155-9002	B-155-9003	B-155-9003	B-155-9003	B-155-9003	B-155-9004	B-155-9003	B-155-9005	B-155-9005
	2	B-155-9003	B-155-9003	B-155-9003	B-155-9003	B-155-9003	B-155-9004	B-155-9004	B-155-9005	B-155-9005
18 AWG	1	B-155-9003	B-155-9003	B-155-9003	B-155-9003	B-155-9003	B-155-9004	B-155-9004	B-155-9005	B-155-9005
	2	B-155-9003	B-155-9003	B-155-9003	B-155-9004	B-155-9003	B-155-9004	B-155-9004	B-155-9005	B-155-9005
16 AWG	1	B-155-9003	B-155-9003	B-155-9003	B-155-9003	B-155-9003	B-155-9004	B-155-9004	B-155-9005	B-155-9005
	2	B-155-9003	B-155-9004	B-155-9003	B-155-9004	B-155-9004	B-155-9005	B-155-9004	B-155-9005	B-155-9005
14 AWG	1	B-155-9003	B-155-9003	B-155-9003	B-155-9004	B-155-9003	B-155-9004	B-155-9004	B-155-9005	B-155-9005
	2	B-155-9004	B-155-9004	B-155-9004	B-155-9005	B-155-9004	B-155-9005	B-155-9005	B-155-9005	B-155-9005
12 AWG	1	B-155-9004	B-155-9004	B-155-9004	B-155-9004	B-155-9004	B-155-9005	B-155-9004	B-155-9005	B-155-9005
	2	B-155-9005	B-155-9005	B-155-9005	B-155-9005	B-155-9005	B-155-9005	B-155-9005	B-155-9005	B-155-9005
10 AWG	1	B-155-9005	B-155-9005	B-155-9005	B-155-9005	B-155-9005	B-155-9005	B-155-9005	B-155-9005	B-155-9005

Table A: CWT Series Selection

Side A: Size and Number of Conductors		Side B: 26 AWG 1	26 AWG 2	24 AWG 1	24 AWG 2	22 AWG 1	22 AWG 2	20 AWG 1	20 AWG 2
26 AWG	1	CWT-9001	CWT-9001	CWT-9001	CWT-9001	CWT-9001	CWT-9002	CWT-9002	CWT-9002
	2	CWT-9001	CWT9001	CWT-9001	CWT-9002	CWT-9001	CWT-9002	CWT-9002	CWT-9002
24 AWG	1	CWT-9001	CWT-9001	CWT-9001	CWT-9001	CWT-9001	CWT-9002	CWT-9002	CWT-9002
	2	CWT-9001	CWT-9002	CWT-9001	CWT-9002	CWT-9002	CWT-9002	CWT-9002	CWT-9002
22 AWG	1	CWT-9001	CWT-9001	CWT-9001	CWT-9002	CWT-9002	CWT-9002	CWT-9002	CWT-9002
	2	CWT-9002	CWT-9002	CWT-9002	CWT-9002	CWT-9002	CWT-9002	CWT-9002	CWT-9003
20 AWG	1	CWT-9002	CWT-9002	CWT-9002	CWT-9002	CWT-9002	CWT-9002	CWT-9002	CWT-9003
	2	CWT-9002	CWT-9002	CWT-9002	CWT-9002	CWT-9002	CWT-9003	CWT-9003	CWT-9003
18 AWG	1	CWT-9002	CWT-9002	CWT-9002	CWT-9002	CWT-9002	CWT-9002	CWT-9002	CWT-9003
	2	CWT-9003	CWT-9003	CWT-9003	CWT-9003	CWT-9003	CWT-9003	CWT-9003	CWT-9003
16 AWG	1	CWT-9002	CWT-9002	CWT-9002	CWT-9002	CWT-9002	CWT-9003	CWT-9003	CWT-9003
	2	CWT-9003	CWT-9003	CWT-9003	CWT-9003	CWT-9003	CWT-9003	CWT-9003	CWT-9003
14 AWG	1	CWT-9003	CWT-9003	CWT-9003	CWT-9003	CWT-9003	CWT9003	CWT-9003	CWT-9003
	2	CWT-9004	CWT-9004	CWT-9004	CWT-9004	CWT-9004	CWT-9004	CWT-9004	CWT-9004
12 AWG	1	CWT-9003	CWT-9003	CWT-9003	CWT-9003	CWT-9003	CWT-9003	CWT-9003	CWT-9004
	2	CWT-9005	CWT-9005	CWT-9005	CWT-9005	CWT-9005	CWT-9005	CWT-9005	CWT9005
10 AWG	1	CWT-9005	CWT-9005	CWT-9005	CWT-9005	CWT-9005	CWT-9005	CWT-9005	CWT-9005

Side A: Size and Number of Conductors		Side B: 18 AWG 1	18 AWG 2	16 AWG 1	16 AWG 2	14 AWG 1	14 AWG 2	12 AWG 1	12 AWG 2	10 AWG 1
26 AWG	1	CWT-9002	CWT-9003	CWT-9002	CWT-9003	CWT-9003	CWT-9004	CWT-9003	CWT-9005	CWT-9005
	2	CWT-9002	CWT-9003	CWT-9002	CWT-9003	CWT-9003	CWT-9004	CWT-9003	CWT-9005	CWT-9005
24 AWG	1	CWT-9002	CWT-9003	CWT-9002	CWT-9003	CWT-9003	CWT-9004	CWT-9003	CWT-9005	CWT-9005
	2	CWT-9002	CWT-9003	CWT-9002	CWT-9003	CWT-9003	CWT-9004	CWT-9003	CWT-9005	CWT-9005
22 AWG	1	CWT-9002	CWT-9003	CWT-9002	CWT-9003	CWT-9003	CWT-9004	CWT-9003	CWT-9005	CWT-9005
	2	CWT-9002	CWT-9003	CWT-9003	CWT-9003	CWT-9003	CWT-9004	CWT-9003	CWT-9005	CWT-9005
20 AWG	1	CWT-9002	CWT-9003	CWT-9003	CWT-9003	CWT-9003	CWT-9004	CWT-9003	CWT-9005	CWT-9005
	2	CWT-9003	CWT-9003	CWT-9003	CWT-9003	CWT-9003	CWT-9004	CWT-9004	CWT-9005	CWT-9005
18 AWG	1	CWT-9003	CWT-9003	CWT-9003	CWT-9003	CWT-9003	CWT-9004	CWT-9004	CWT-9005	CWT-9005
	2	CWT-9003	CWT-9003	CWT-9003	CWT-9004	CWT-9003	CWT-9004	CWT-9004	CWT-9005	CWT-9005
16 AWG	1	CWT-9003	CWT-9003	CWT-9003	CWT-9003	CWT-9003	CWT-9004	CWT-9004	CWT-9005	CWT-9005
	2	CWT-9003	CWT-9004	CWT-9003	CWT-9004	CWT-9004	CWT-9005	CWT-9004	CWT-9005	CWT-9005
14 AWG	1	CWT-9003	CWT-9003	CWT-9003	CWT-9004	CWT-9003	CWT-9004	CWT-9004	CWT-9005	CWT-9005
	2	CWT-9004	CWT-9004	CWT-9004	CWT-9005	CWT-9004	CWT-9005	CWT-9005	CWT-9005	CWT-9005
12 AWG	1	CWT-9004	CWT-9004	CWT-9004	CWT-9004	CWT-9004	CWT-9005	CWT-9004	CWT-9005	CWT-9005
	2	CWT-9005	CWT-9005	CWT-9005	CWT-9005	CWT-9005	CWT-9005	CWT-9005	CWT-9005	CWT-9005
10 AWG	1	CWT-9005	CWT-9005	CWT-9005	CWT-9005	CWT-9005	CWT-9005	CWT-9005	CWT-9005	B-155-9005

Catalog 1654025
Revised 3-13

www.te.com

Dimensions are shown for reference purposes only. Specifications subject to change.

Dimensions are in millimeters unless otherwise specified.

USA: +1 800 522 6752
Asia Pacific: +86 0 400 820 6015
UK: +44 800 267 666

For additional support numbers please visit www.te.com

SolderSleeve Wire Splices (Continued)

Table B: D-110 Series Selection

Side A: Size and Number of Conductors		Side B: Size and Number of Conductors							
		26 AWG		24 AWG		22 AWG		20 AWG	
		1	2	1	2	1	2	1	2
26 AWG	1	D-110-35	D-110-35	D-110-35	D-110-35	D-110-35	D-110-41	D-110-41	D-110-41
	2	D-110-35	D-110-35	D-110-35	D-110-41	D-110-35	D-110-41	D-110-41	D-110-41
24 AWG	1	D-110-35	D-110-35	D-110-35	D-110-35	D-110-35	D-110-41	D-110-41	D-110-41
	2	D-110-35	D-110-41	D-110-35	D-110-41	D-110-41	D-110-41	D-110-41	D-110-41
22 AWG	1	D-110-35	D-110-35	D-110-35	D-110-41	D-110-41	D-110-41	D-110-41	D-110-41
	2	D-110-41	D-110-41	D-110-41	D-110-41	D-110-41	D-110-41	D-110-41	D-110-0181
20 AWG	1	D-110-41	D-110-41	D-110-41	D-110-41	D-110-41	D-110-41	D-110-41	D-110-0181
	2	D-110-41	D-110-41	D-110-41	D-110-41	D-110-41	D-110-0181	D-110-0181	D-110-0181
18 AWG	1	D-110-41	D-110-41	D-110-41	D-110-41	D-110-41	D-110-41	D-110-41	D-110-0181
	2	D-110-0181	D-110-0181	D-110-0181	D-110-0181	D-110-0181	D-110-0101	D-110-0101	D-110-0101
16 AWG	1	D-110-41	D-110-41	D-110-41	D-110-41	D-110-41	D-110-0181	D-110-0181	D-110-0181
	2	D-110-0101	D-110-0101	D-110-0101	D-110-0101	D-110-0181	D-110-0101	D-110-0101	D-110-0101
14 AWG	1	D-110-0181	D-110-0181	D-110-0181	D-110-0181	D-110-0181	D-110-0101	D-110-0101	D-110-0101
	2	D-110-0101	D-110-0101	D-110-0101	D-110-0101	D-110-0101	D-110-0090	D-110-0101	D-110-0090
12 AWG	1	D-110-0101	D-110-0101	D-110-0101	D-110-0101	D-110-0101	D-110-0101	D-110-0101	D-110-0101
	2	D-110-0090	D-110-0090	D-110-0090	D-110-0090	D-110-0090	D-110-0090	D-110-0090	D-110-0090
10 AWG	1	D-110-0090	D-110-0090	D-110-0090	D-110-0090	D-110-0090	D-110-0083	D-110-0083	D-110-0083

Side A: Size and Number of Conductors		Side B: Size and Number of Conductors								
		18 AWG		16 AWG		14 AWG		12 AWG		10 AWG
		1	2	1	2	1	2	1	2	1
26 AWG	1	D-110-41	D-110-0181	D-110-41	D-110-0101	D-110-0181	D-110-0101	D-110-0101	D-110-0090	D-110-0090
	2	D-110-41	D-110-0181	D-110-41	D-110-0101	D-110-0181	D-110-0101	D-110-0101	D-110-0090	D-110-0090
24 AWG	1	D-110-41	D-110-0181	D-110-41	D-110-0101	D-110-0181	D-110-0101	D-110-0101	D-110-0090	D-110-0090
	2	D-110-41	D-110-0181	D-110-41	D-110-0101	D-110-0181	D-110-0101	D-110-0101	D-110-0090	D-110-0090
22 AWG	1	D-110-41	D-110-0181	D-110-41	D-110-0181	D-110-0181	D-110-0101	D-110-0101	D-110-0090	D-110-0090
	2	D-110-41	D-110-0101	D-110-0181	D-110-0101	D-110-0101	D-110-0090	D-110-0101	D-110-0090	D-110-0090
20 AWG	1	D-110-41	D-110-0101	D-110-0181	D-110-0101	D-110-0101	D-110-0101	D-110-0101	D-110-0090	D-110-0090
	2	D-110-0181	D-110-0101	D-110-0181	D-110-0101	D-110-0101	D-110-0090	D-110-0101	D-110-0090	D-110-0090
18 AWG	1	D-110-0181	D-110-0101	D-110-0181	D-110-0101	D-110-0101	D-110-0090	D-110-0101	D-110-0090	D-110-0090
	2	D-110-0101	D-110-0101	D-110-0101	D-110-0101	D-110-0101	D-110-0090	D-110-0090	D-110-0090	D-110-0083
16 AWG	1	D-110-0181	D-110-0101	D-110-0181	D-110-0101	D-110-0101	D-110-0090	D-110-0101	D-110-0090	D-110-0090
	2	D-110-0101	D-110-0101	D-110-0101	D-110-0090	D-110-0101	D-110-0090	D-110-0090	D-110-0083	D-110-0083
14 AWG	1	D-110-0101	D-110-0101	D-110-0101	D-110-0101	D-110-0101	D-110-0090	D-110-0090	D-110-0090	D-110-0083
	2	D-110-0090	D-110-0090	D-110-0090	D-110-0090	D-110-0090	D-110-0090	D-110-0090	D-110-0083	D-110-0083
12 AWG	1	D-110-0101	D-110-0090	D-110-0101	D-110-0090	D-110-0090	D-110-0090	D-110-0090	D-110-0083	D-110-0083
	2	D-110-0090	D-110-0090	D-110-0090	D-110-0083	D-110-0090	D-110-0083	D-110-0083	D-110-0083	D-110-0083
10 AWG	1	D-110-0083	D-110-0083	D-110-0083	D-110-0083	D-110-0083	D-110-0083	D-110-0083	D-110-0083	D-110-0083

Fine Wire Splices 26 AWG (0.15 mm^2) and Smaller

Part No.	Inside Diameter		
	As Supplied*	Fully Recovered**	Length***
D-110-0071	0.9 [0.035]	0.6 [0.025]	4.7 [0.185]
D-110-0213	0.9 [0.035]	0.6 [0.025]	4.2 [0.165]
D-110-0214	0.6 [0.025]	0.3 [0.013]	6.3 [0.250]
D-110-0217	1.0 [0.040]	0.6 [0.025)	9.1 [0.360]
D-110-40	0.6 [0.025]	0.5 [0.021]	5.1 [0.200]

Note: Micro SolderSleeve terminations are used for splicing wires smaller than 26 AWG [0.15 mm^2].
*Minimum. Wire insulation must be smaller than this.
**Maximum. Wire insulation and combined conductor diameters must be greater than this.
***Nominal. Wire strip length must be approximately one-half of this.

Dimensions are shown for reference purposes only. Specifications subject to change.

Dimensions are in millimeters unless otherwise specified.

USA: +1 800 522 6752
Asia Pacific: +86 0 400 820 6015
UK: +44 800 267 666

For additional support numbers please visit www.te.com

SolderSleeve Wire Splices (Continued)

Table C:
D-1744 Series Selection

Side A: Size and Number of Conductors		Side B: Size and Number of Conductors							
		26 AWG		24 AWG		22 AWG		20 AWG	
		1	2	1	2	1	2	1	2
26 AWG	1	D-1744-01	D-1744-01	D-1744-01	D-1744-01	D-1744-01	D-1744-01	D-1744-01	D-1744-02
	2	D-1744-01	D-1744-01	D-1744-01	D-1744-01	D-1744-01	D-1744-02	D-1744-01	D-1744-02
24 AWG	1	D-1744-01	D-1744-01	D-1744-01	D-1744-01	D-1744-01	D-1744-01	D-1744-01	D-1744-02
	2	D-1744-01	D-1744-01	D-1744-01	D-1744-01	D-1744-01	D-1744-02	D-1744-02	D-1744-02
22 AWG	1	D-1744-01	D-1744-01	D-1744-01	D-1744-01	D-1744-01	D-1744-02	D-1744-01	D-1744-02
	2	D-1744-01	D-1744-02	D-1744-01	D-1744-02	D-1744-02	D-1744-02	D-1744-02	D-1744-02
20 AWG	1	D-1744-01	D-1744-01	D-1744-01	D-1744-02	D-1744-01	D-1744-02	D-1744-02	D-1744-02
	2	D-1744-02	D-1744-02	D-1744-02	D-1744-02	D-1744-02	D-1744-02	D-1744-02	D-1744-03
18 AWG	1	D-1744-02	D-1744-02	D-1744-02	D-1744-02	D-1744-02	D-1744-02	D-1744-02	D-1744-03
	2	D-1744-03	D-1744-03	D-1744-03	D-1744-03	D-1744-03	D-1744-03	D-1744-03	D-1744-03
16 AWG	1	D-1744-02	D-1744-02	D-1744-02	D-1744-02	D-1744-02	D-1744-02	D-1744-02	D-1744-03
	2	D-1744-03	D-1744-03	D-1744-03	D-1744-03	D-1744-03	D-1744-03	D-1744-03	D-1744-03
14 AWG	1	D-1744-03	D-1744-03	D-1744-03	D-1744-03	D-1744-03	D-1744-03	D-1744-03	D-1744-03
	2	D-1744-03	D-1744-03	D-1744-03	D-1744-03	D-1744-03	D-1744-03	D-1744-03	D-1744-04
12 AWG	1	D-1744-03	D-1744-03	D-1744-03	D-1744-03	D-1744-03	D-1744-03	D-1744-04	D-1744-04
	2	D-1744-04	D-1744-04	D-1744-04	—	D-1744-04	—	—	—

Side A: Size and Number of Conductors		Side B: Size and Number of Conductors							
		18 AWG		16 AWG		14 AWG		12 AWG	
		1	2	1	2	1	2	1	2
26 AWG	1	D-1744-02	D-1744-03	D-1744-02	D-1744-03	D-1744-03	D-1744-03	D-1744-03	D-1744-04
	2	D-1744-02	D-1744-03	D-1744-02	D-1744-03	D-1744-03	D-1744-03	D-1744-03	D-1744-04
24 AWG	1	D-1744-02	D-1744-03	D-1744-02	D-1744-03	D-1744-03	D-1744-03	D-1744-03	D-1744-04
	2	D-1744-02	D-1744-03	D-1744-02	D-1744-03	D-1744-03	D-1744-03	D-1744-03	—
22 AWG	1	D-1744-02	D-1744-03	D-1744-02	D-1744-03	D-1744-03	D-1744-03	D-1744-03	D-1744-04
	2	D-1744-02	D-1744-03	D-1744-02	D-1744-03	D-1744-03	D-1744-03	D-1744-03	—
20 AWG	1	D-1744-02	D-1744-03	D-1744-02	D-1744-03	D-1744-03	D-1744-03	D-1744-04	—
	2	D-1744-03	D-1744-03	D-1744-03	D-1744-03	D-1744-03	D-1744-04	D-1744-04	—
18 AWG	1	D-1744-02	D-1744-03	D-1744-03	D-1744-03	D-1744-03	D-1744-03	D-1744-03	—
	2	D-1744-03	D-1744-03	D-1744-03	D-1744-03	D-1744-03	D-1744-04	D-1744-03	—
16 AWG	1	D-1744-03	D-1744-03	D-1744-03	D-1744-03	D-1744-03	D-1744-04	D-1744-03	—
	2	D-1744-03	D-1744-03	D-1744-03	D-1744-03	D-1744-03	D-1744-04	D-1744-04	—
14 AWG	1	D-1744-03	D-1744-03	D-1744-03	D-1744-03	D-1744-03	D-1744-04	D-1744-03	—
	2	D-1744-03	D-1744-04	D-1744-04	D-1744-04	D-1744-04	—	—	—
12 AWG	1	D-1744-03	D-1744-03	D-1744-03	D-1744-04	D-1744-03	—	D-1744-04	—

Catalog 1654025
Revised 3-13

www.te.com

Dimensions are shown for reference purposes only. Specifications subject to change.

Dimensions are in millimeters unless otherwise specified.

USA: +1 800 522 6752
Asia Pacific: +86 0 400 820 6015
UK: +44 800 267 666

For additional support numbers please visit www.te.com

SolderSleeve Wire Splices (Continued)

CMA/mm² Calculation

To calculate the total circular mil or mm² area of the conductors to be terminated in a single splice, follow these steps:

1. Choose either CMA or mm² as your unit of measure for selection purposes and continue to use it for all your selection criteria.
2. In the workspace below, list the CMA or mm² for each conductor that will go into the same splice. (To assist you, Table D on this page provides the CMA of typical conductors.)
3. Add together the values listed in the workspace below to obtain the total area.
4. From Table E on the next page, select the part number recommended for the total CMA or mm² you have calculated.
5. Refer to the examples on this page for further clarification.

Wire Number	CMA	mm²	
1			
2			
3			
4			
5			Part Number:
Total			

CMA/mm² Examples

One-to-One Wire Splice

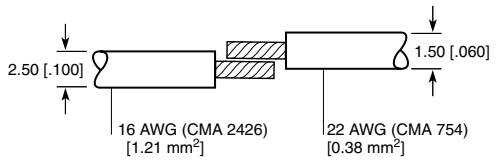

Total CMA = 3180
Total mm² = 1.59

Correct part number selection from Table E (based on CMA/mm² and nominal jacket wire OD) = B-155-9002, CWT-9002, D-110-41 or D-1744-02.

Multiwire Splice

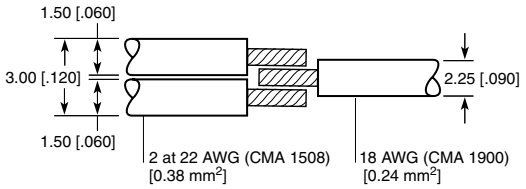

Total CMA = 3408
Total mm² = 1.71

Correct part number selection from Table E (based on CMA/mm² and nominal jacket wire OD) = B-155-9003, CWT-9003, D-110-0181 or D-1744-03.

Table D.

CMA of Typical AWG Conductors

AWG	28	26	24	22	20	18	16	14	12
CMA	177	304	475	754	1216	1900	2426	3831	5874
mm²	0.09	0.15	0.23	0.38	0.62	0.96	1.23	1.44	2.97

Catalog 1654025
Revised 3-13

www.te.com

Dimensions are shown for reference purposes only. Specifications subject to change.

Dimensions are in millimeters unless otherwise specified.

USA: +1 800 522 6752
Asia Pacific: +86 0 400 820 6015
UK: +44 800 267 666

For additional support numbers please visit www.te.com

SolderSleeve Wire Splices (Continued)

Installation Requirements

For proper installation of these devices the correct heating tool and reflector attachment must be used. Any one of the following TE heating tools is recommended:

- HL1910E/HL2010E
- IR-1759 MiniRay
- AA-400 Super Heater
- CV-1981

Refer to TE installation procedure RPIP-850-00 for D-1744 Series and RPIP- 824-00 for B-155 Series.

You will find ordering information for these tools in Section 10.

Table E: Multiwire Splice Selection

Product Series	Wire Jacket OD		CMA Combined Total		mm² Combined Total	
	Min.	Max.	Min.	Max.	Min.	Max.
B-155-9001	0.4 [0.015]	1.7 [0.066]	450	1500	0.3	0.8
B-155-9002	1.3 [0.05]	2.7 [0.106]	1500	4000	0.8	2.0
B-155-9003	1.8 [0.07]	4.5 [0.18]	4000	7800	2.0	4.0
B-155-9004	2.8 [0.11]	6.0 [0.236]	7800	12000	4.0	6.0
B-155-9005	3.2 [0.125]	7.0 [0.275]	12000	19000	6.0	10.0
D-1744-01	0.50 [0.020]	1.90 [0.075]	350	2000	–	–
D-1744-02	0.80 [0.031]	2.80 [0.110]	2000	4000	–	–
D-1744-03	1.30 [0.050]	4.57 [0.180]	4000	10000	–	–
D-1744-04	2.00 [0.080]	7.11 [0.280]	10000	13000	–	–
D-110-35	0.51 [0.020]	1.78 [0.070]	500	1500	–	–
D-110-41	1.27 [0.050]	2.54 [1.00]	1200	3500	–	–
D-110-0181	1.9 [0.075]	4.5 [0.177]	3600	6000	–	–
D-110-0101	2.41 [0.095]	4.32 [0.17]	4800	9000	–	–
D-110-0090	3.56 [0.140]	7.11 [0.28]	8500	16200	–	–
D-110-0083	4.0 [0.160]	8.76 [0.345]	16200	25000	–	–

Product Characteristics

Material		
Insulation (D-110, D-1744)	Radiation-crosslinked, heat-shrinkable polyvinylidene fluoride	
Insulation (B-155)	Radiation-crosslinked, heat-shrinkable polyolefin	
Solder and flux (D-110, D-1744)	Solder: Sn63 Pb37	Flux: ROL1 per ANSI-J-004 (RMA flux)
Solder and flux (B-155)	Solder: Sn42Bi58	Flux: ROM1 per ANSI-J-004 (RA Flux)
Solder and flux (CWT)	Solder: Sn50 Pb32 Cd18	Flux: ROM1 per ASNI-J-004 (RA flux)
Meltable inserts (B-155, D-1744)	Meltable thermoplastic	
Typical Performance		
Voltage drop	2.0 mV	
Tensile strength	Exceeds strength of conductor	
Dielectric strength	2.0 kV	
Temperature rating (B-155)	-55°C to +125°C [-67°F to +257°F]	
Temperature rating (D-110, D-1744)	-55°C to +150°C [-67°F to +302°F]	
Insulation resistance	1000 megohms	

Specifications/Approvals

Series	Agency	TE
B-155	n/a	RT-1404
CWT	UL E87681	D-5023
D-110	UL E87681	RT-1404
D-1744	NAS-1744	RT-1404

Dimensions are shown for reference purposes only. Specifications subject to change.

Dimensions are in millimeters unless otherwise specified.

USA: +1 800 522 6752
Asia Pacific: +86 0 400 820 6015
UK: +44 800 267 666

For additional support numbers please visit www.te.com

SolderGrip Closed End Connector Splices

Product Facts

- Soldered connection
- Electrical insulation
- Sealed for immersion (SGRS-X-58, SGRS)
- Excellent strain relief
- Simple installation

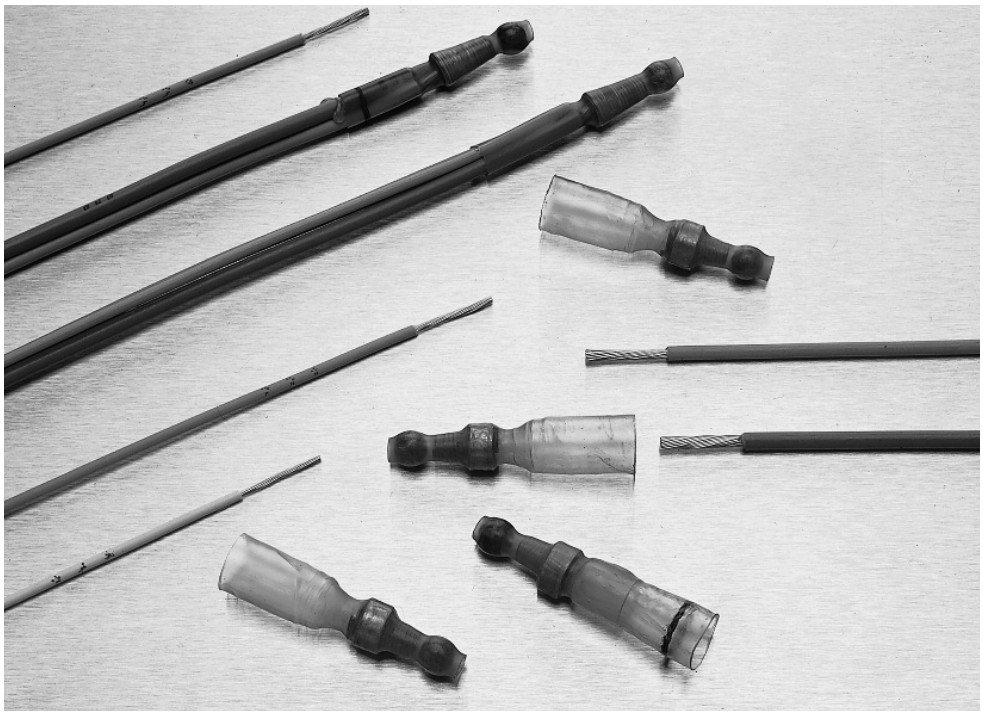

Applications

SolderGrip heat-shrinkable solder-type closed-end connectors are designed for electrical termination of multiple-wire combinations. They provide a reliable alternative to crimping, welding, or conventional twist-on-style closed-end connectors.

Their unique combination of wire fixturing and controlled-soldering technology provides dependable electrical termination of multiple wire combinations.

SolderGrip terminators consist of a heat-shrinkable thermoplastic sleeve containing a spiral-wound copper insert. The insert is fitted with a prefluxed solder band.

This innovation design allows SolderGrip products to reliably terminate as many as 10 wires of different sizes and types in a single device.

The capability of SolderGrip terminators encompasses single or multi-stranded, bare or tinned copper wires with low- or high-temperature insulation.

The termination is environmentally protected and strain relieved.

SolderGrip splice terminators are color-coded for easy identification.

Product Options

Product Series	Environmental Protection	Max. Operating Temp.
SGRP	Splashproof	125°C [257°F]
SGRS-X-58	Sealed	125˚C [257˚F]
SGRS	Sealed	125°C [257°F]

Available in:	
Americas	■
Europe	■
Asia Pacific	■

Catalog 1654025
Revised 3-13

www.te.com

Dimensions are shown for reference purposes only. Specifications subject to change.

Dimensions are in millimeters unless otherwise specified.

USA: +1 800 522 6752
Asia Pacific: +86 0 400 820 6015
UK: +44 800 267 666

For additional support numbers please visit www.te.com

SolderGrip Closed End Connector Splices (Continued)

Product Selection Process

1. From the Product Options table on the previous page, select the product series appropriate for your application.
2. Determine the wire combination (number of wires and size) of the wire bundle you wish to splice.
3. Use Table C (page 8-15) to select the correct connector for AWG wire combinations.*
   For mm² wire combinations use Table A to select a SolderGrip part number.

Example: For connecting a bundle with one 12 AWG wire (1 #12) and two 14 AWG wires (+2 #14), you need an SGRP-3 connector. For sealed parts, select the SGRS series.

*If the wire combination is not listed in Table C, use the CMA (mm²) method of determining wire bundle size (see "CMA/mm² Calculation" on page 8-14). Using Table B (page 8-14, select the smallest size connector that will fit your total wire CMA (mm²) value.

4. Verify that the wire bundle (with wire insulation) does not exceed the maximum diameter allowed for the connector you selected. Simply check the bundle's diameter against the maximum diameter that Table A (below) lists for that part.
5. Verify that the total amperage to be applied does not exceed the maximum amp rating for the part.

Insulated Closed-End Connectors (SGRP series)

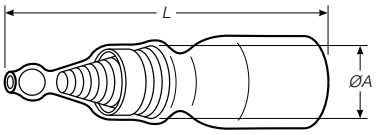

Insulated and Sealed Closed-End Connectors (SGRS series)

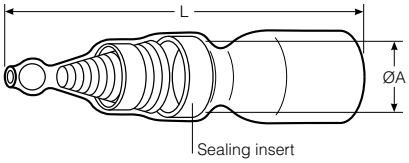

Table A - Product Dimensions and Part Number Descriptions

Part No.	Color Code	Product Dimensions (Min.) L	ØA	Wire Range (Min.-Max.) CMA/mm²
SGRP-1	Green	1.370 [34.8]	.120 [2.9]	1400 - 4800 [0.7 - 2.4]
SGRP-2	Red	1.350 [34.2]	.150 [3.7]	4000 - 8000 [2.0 - 4.0]
SGRP-3	Blue	1.610 [41.0]	.200 [5.1]	7000 - 16000 [3.5 - 8.0]
SGRP-4	Yellow	1.650 [42.0]	.270 [6.8]	15000 - 24000 [7.5 - 12.0]

Part No.	Color Code	Product Dimensions (Min.) L	ØA	Wire Range (Min.-Max.) CMA/mm²
SGRS-1	Green	1.370 [34.8]	0.130 [3.4]	1400 - 4800 [0.7 - 2.4]
SGRS-2	Red	1.350 [34.2]	0.190 [4.8]	4000 - 8000 [2.0 - 4.0]
SGRS-3	Blue	1.650 [42.0]	0.290 [7.3]	7000 - 16000 [3.5 - 8.0]
SGRS-4	Yellow	1.630 [41.5]	0.360 [9.1]	15000 - 24000 [7.5 - 12.0]

Part No.	Color Code	Product Dimensions (Min.) L	ØA	Wire Range (Min.-Max.) CMA/mm²
SGRS-1-58	Green	1.370 [34.8]	0.130 [3.4]	1400 - 4800 [0.7 - 2.4]
SGRS-2-58	Red	1.350 [34.2]	0.190 [4.8]	4000 - 8000 [2.0 - 4.0]
SGRS-3-58	Blue	1.650 [42.0]	0.290 [7.3]	7000 - 16000 [3.5 - 8.0]
SGRS-4-58	Yellow	1.630 [41.5]	0.360 [9.1]	15000 - 24000 [7.5 - 12.0]

Catalog 1654025
Revised 3-13

www.te.com

Dimensions are shown for reference purposes only. Specifications subject to change.

Dimensions are in millimeters unless otherwise specified.

USA: +1 800 522 6752
Asia Pacific: +86 0 400 820 6015
UK: +44 800 267 666

For additional support numbers please visit www.te.com

SolderGrip Closed End Connector Splices (Continued)

CMA/mm² Calculation

To calculate the total circular mil or mm² area of the wire bundle to be terminated, follow these steps:

1. Choose either CMA or mm² as your unit of measure for selection purposes and continue to use it for all your selection criteria. (Both measures provide the same results.)
2. In the workspace below, list the CMA or mm² for each conductor in the bundle. (Table B provides the CMA of typical conductors.)
3. Add together the values listed in the workspace below to obtain the total area.
4. Use Table A to select the smallest terminator that will fit the total CMA (mm²).

Wire Number	CMA	mm²	
1			
2			
3			
4			
5			
6			
7			
8			
9			
10			Solder Grip Part No.
Total			

CMA/mm² Example

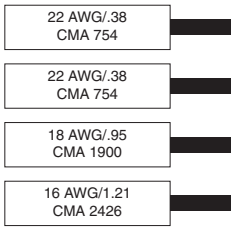

Total CMA = 5834
Total mm2 = 2.92
Correct part number (based on CMA of 5834 or mm² of 2.92): SGRP-2, SGRS-2 or SGRS-2-58

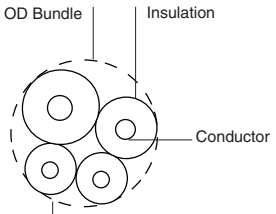

Bundle diameter must not exceed 6.0 mm (0.24 in) for SGRP-2 or 0.18 mm (4.5 in) for SGRS-2 or SGRS-2-58

Table B. CMA of Typical Copper Conductors

AWG	30	28	26	24	22	20	18	16	14	12	10	8
CMA	112	177	304	475	754	1216	1900	2426	3831	5874	9354	16983
mm²	0.05	0.09	0.15	0.24	0.38	0.61	0.95	1.21	1.92	2.94	4.74	8.61

Catalog 1654025
Revised 3-13

www.te.com

Dimensions are shown for reference purposes only. Specifications subject to change.

Dimensions are in millimeters unless otherwise specified.

USA: +1 800 522 6752
Asia Pacific: +86 0 400 820 6015
UK: +44 800 267 666

For additional support numbers please visit www.te.com

SolderGrip Closed End Connector Splices (Continued)

Table C. SolderGrip Wire Combinations

Wire Combinations	Splash-proof	Sealed
1 # 8 + 1 # 12	SGRP-4	SGRS-4-58
1 # 8 + 1 # 16	SGRP-4	SGRS-4-58
2 # 8 + 2 # 16	SGRP-4	SGRS-4-58
1 # 8 + 1 # 14	SGRP-4	SGRS-4-58
1 # 8 + 1 # 14 + 1 # 16	SGRP-4	SGRS-4-58
1 # 10 + 1 # 18	SGRP-3	SGRS-3-58
1 # 10 + 2 # 18	SGRP-3	SGRS-3-58
1 # 10 + 3 # 18	SGRP-3	SGRS-3-58
1 # 10 + 1 # 16	SGRP-3	SGRS-3-58
1 # 10 + 1 # 16 + 1 # 18	SGRP-3	SGRS-3-58
1 # 10 + 1 # 16 + 2 # 18	SGRP-3	SGRS-3-58
1 # 10 + 2 # 16	SGRP-3	SGRS-3-58
1 # 10 + 3 # 16	SGRP-4	SGRS-4-58
1 # 10 + 4 # 16	SGRP-4	SGRS-4-58
1 # 10 + 5 # 16	SGRP-4	SGRS-4-58
1 # 10 + 1 # 14	SGRP-3	SGRS-3-58
1 # 10 + 1 # 14 + 1 # 18	SGRP-3	SGRS-3-58
1 # 10 + 1 # 14 + 1 # 16	SGRP-3	SGRS-3-58
1 # 10 + 1 # 14 + 2 # 16	SGRP-3	SGRS-3-58
1 # 10 + 1 # 14 + 3 # 16	SGRP-4	SGRS-4-58
1 # 10 + 2 # 14	SGRP-4	SGRS-4-58
1 # 10 + 3 # 14	SGRP-4	SGRS-4-58
1 # 10 + 1 # 12	SGRP-3	SGRS-3-58
1 # 10 + 1 # 12 + 1 # 14	SGRP-4	SGRS-4-58
1 # 10 + 2 # 12	SGRP-4	SGRS-4-58
2 # 10	SGRP-4	SGRS-4-58
2 # 10 + 1 # 16	SGRP-4	SGRS-4-58
1 # 12 + 1 # 18	SGRP-2	SGRS-2-58
1 # 12 + 2 # 18	SGRP-3	SGRS-3-58
1 # 12 + 3 # 18	SGRP-3	SGRS-3-58
1 # 12 + 4 # 18	SGRP-3	SGRS-3-58
1 # 12 + 5 # 18	SGRP-3	SGRS-3-58
1 # 12 + 1 # 16	SGRP-3	SGRS-3-58
1 # 12 + 1 # 16 + 1 # 18	SGRP-3	SGRS-3-58
1 # 12 + 1 # 16 + 2 # 18	SGRP-3	SGRS-3-58
1 # 12 + 1 # 16 + 3 # 18	SGRP-3	SGRS-3-58
1 # 12 + 1 # 16 + 4 # 18	SGRP-4	SGRS-4-58
1 # 12 + 2 # 16	SGRP-3	SGRS-3-58

Wire Combinations	Splash-proof	Sealed
1 # 14 + 3 # 20	SGRP-2	SGRS-2-58
1 # 14 + 4 # 20	SGRP-3	SGRS-3-58
1 # 14 + 1 # 18	SGRP-2	SGRS-2-58
1 # 14 + 1 # 18 + 1 # 20	SGRP-2	SGRS-2-58
1 # 14 + 2 # 18	SGRP-2	SGRS-2-58
1 # 14 + 3 # 18	SGRP-3	SGRS-3-58
1 # 14 + 4 # 18	SGRP-3	SGRS-3-58
1 # 14 + 5 # 18	SGRP-3	SGRS-3-58
1 # 14 + 1 # 16	SGRP-2	SGRS-3-58
1 # 14 + 1 # 16 + 1 # 20	SGRP-2	SGRS-2-58
1 # 14 + 1 # 16 + 1 # 18	SGRP-3	SGRS-3-58
1 # 14 + 1 # 16 + 2 # 18	SGRP-3	SGRS-3-58
1 # 14 + 1 # 16 + 3 # 18	SGRP-3	SGRS-3-58
1 # 14 + 1 # 16 + 4 # 18	SGRP-3	SGRS-3-58
1 # 14 + 2 # 16	SGRP-3	SGRS-3-58
1 # 14 + 2 # 16 + 1 # 18	SGRP-3	SGRS-3-58
1 # 14 + 2 # 16 + 2 # 18	SGRP-3	SGRS-3-58
1 # 14 + 2 # 16 + 3 # 18	SGRP-3	SGRS-3-58
1 # 14 + 3 # 16	SGRP-3	SGRS-3-58
1 # 14 + 3 # 16 + 1 # 18	SGRP-3	SGRS-3-58
1 # 14 + 3 # 16 + 2 # 18	SGRP-3	SGRS-3-58
1 # 14 + 4 # 16	SGRP-3	SGRS-3-58
1 # 14 + 4 # 16 + 1 # 18	SGRP-3	SGRS-3-58
1 # 14 + 5 # 16	SGRP-3	SGRS-3-58
2 # 14	SGRP-2	SGRS-2 -58
2 # 14 + 1 # 16	SGRP-3	SGRS-3-58
2 # 14 + 1 # 16	SGRP-3	SGRS-3-58
2 # 14 + 1 # 16	SGRP-3	SGRS-3-58
2 # 14 + 1 # 16	SGRP-3	SGRS-3-58
2 # 14 + 2 # 16	SGRP-3	SGRS-3-58
2 # 14 + 2 # 16	SGRP-3	SGRS-3-58
2 # 14 + 3 # 16	SGRP-3	SGRS-3-58
2 # 14 + 4 # 16	SGRP-4	SGRS-4-58
3 # 14	SGRP-3	SGRS-3-58
3 # 14 + 1 # 16	SGRP-3	SGRS-3-58
3 # 14 + 2 # 16	SGRP-4	SGRS-4-58
3 # 14 + 3 # 16	SGRP-4	SGRS-4-58
4 # 14	SGRP-3	SGRS-3-58

Wire Combinations	Splash-proof	Sealed
2 # 16 + 1 # 18 + 3 # 20	SGRP-3	SGRS-3-58
2 # 16 + 1 # 18 + 2 # 20	SGRP-3	SGRS-3-58
2 # 16 + 1 # 18 + 1 # 20	SGRP-2	SGRS-2-58
2 # 16 + 1 # 18	SGRP-2	SGRS-2-58
2 # 16 + 4 # 20	SGRP-3	SGRS-3-58
2 # 16 + 3 # 20	SGRP-3	SGRS-3-58
2 # 16 + 2 # 20	SGRP-2	SGRS-2-58
2 # 16 + 1 # 20	SGRP-2	SGRS-2-58
2 # 16	SGRP-2	SGRS-2-58
1 # 16 + 5 # 18	SGRP-3	SGRS-3-58
1 # 16 + 4 # 18 + 1 # 20	SGRP-3	SGRS-3-58
1 # 16 + 4 # 18	SGRP-3	SGRS-3-58
1 # 16 + 3 # 18 + 2 # 20	SGRP-3	SGRS-3-58
1 # 16 + 3 # 18 + 1 # 20	SGRP-3	SGRS-3-58
1 # 16 + 2 # 18 + 3 # 20	SGRP-3	SGRS-3-58
1 # 16 + 2 # 18 + 1 # 20	SGRP-2	SGRS-2 -58
1 # 16 + 2 # 18	SGRP-2	SGRS-2-58
1 # 16 + 1 # 18 + 4 # 20	SGRP-3	SGRS-3-58
1 # 16 + 1 # 18 + 3 # 20	SGRP-2	SGRS-2-58
1 # 16 + 1 # 18 + 2 # 20	SGRP-2	SGRS-2 -58
1 # 16 + 1 # 18 + 1 # 20	SGRP-2	SGRS-2-58
1 # 16 + 1 # 18	SGRP-1	SGRS-1-58
1 # 16 + 4 # 20	SGRP-2	SGRS-2-58
1 # 16 + 3 # 20	SGRP-2	SGRS-2-58
1 # 16 + 1 # 20 + 1 # 22	SGRP-1	SGRS-1-58
1 # 16 + 1 # 20	SGRP-1	SGRS-1-58
1 # 16 + 3 # 22	SGRP-1	SGRS-1-58
1 # 16 + 2 # 22	SGRP-1	SGRS-1-58
1 # 16 + 1 # 22	SGRP-1	SGRS-1-58
1 # 18 + 1 # 22	SGRP-1	SGRS-1-58
1 # 18 + 2 # 22	SGRP-1	SGRS-1-58
1 # 18 + 3 # 22	SGRP-1	SGRS-1-58
1 # 18 + 1 # 20	SGRP-1	SGRS-1-58
1 # 18 + 1 # 20 + 1 # 22	SGRP-1	SGRS-1-58
1 # 18 + 1 # 20 + 2 # 22	SGRP-1	SGRS-1-58
1 # 18 + 2 # 20	SGRP-1	SGRS-1-58
1 # 18 + 3 # 20	SGRP-2	SGRS-2-58
1 # 18 + 4 # 20	SGRP-2	SGRS-2-58

Dimensions are shown for reference purposes only. Specifications subject to change.

Dimensions are in millimeters unless otherwise specified.

USA: +1 800 522 6752
Asia Pacific: +86 0 400 820 6015
UK: +44 800 267 666

For additional support numbers please visit www.te.com

SolderGrip Closed End Connector Splices (Continued)

Table C. SolderGrip Wire Combinations (Continued)

Wire Combinations	Splash-proof	Sealed
1 # 12 + 2 # 16 + 1 # 18	SGRP-3	SGRS-3-58
1 # 12 + 2 # 16 + 2 # 18	SGRP-3	SGRS-3-58
1 # 12 + 3 # 16	SGRP-3	SGRS-3-58
1 # 12 + 4 # 16	SGRP-3	SGRS-3-58
1 # 12 + 5 # 16	SGRP-4	SGRS-4-58
1 # 12 + 1 # 14 + 1 # 18	SGRP-3	SGRS-3-58
1 # 12 + 1 # 14 + 2 # 18	SGRP-3	SGRS-3-58
1 # 12 + 1 # 14 + 3 # 18	SGRP-3	SGRS-3-58
1 # 12 + 1 # 14 + 1 # 16	SGRP-3	SGRS-3-58
1 # 12 + 1 # 14 + 2 # 16	SGRP-3	SGRS-3-58
1 # 12 + 1 # 14 + 3 # 16	SGRP-4	SGRS-4-58
1 # 12 + 1 # 14 + 4 # 16	SGRP-4	SGRS-4-58
1 # 12 + 2 # 14	SGRP-3	SGRS-3-58
1 # 12 + 2 # 14 + 1 # 18	SGRP-3	SGRS-3-58
1 # 12 + 2 # 14 + 1 # 16	SGRP-4	SGRS-4-58
1 # 12 + 2 # 14 + 2 # 16	SGRP-4	SGRS-4-58
1 # 12 + 2 # 14 + 3 # 16	SGRP-4	SGRS-4-58
1 # 12 + 3 # 14	SGRP-4	SGRS-4-58
1 # 12 + 3 # 14 + 1 # 16	SGRP-4	SGRS-4-58
1 # 12 + 4 # 14	SGRP-4	SGRS-4-58
2 # 12	SGRP-4	SGRS-4-58
2 # 12 + 1 # 18	SGRP-3	SGRS-3-58
2 # 12 + 1 # 18	SGRP-3	SGRS-3-58
2 # 12 + 1 # 16	SGRP-3	SGRS-3-58
2 # 12 + 2 # 16 + 1 # 18	SGRP-4	SGRS-4-58
2 # 12 + 3 # 16	SGRP-4	SGRS-4-58
2 # 12 + 1 # 14 + 1 # 18	SGRP-4	SGRS-4-58
2 # 12 + 1 # 14 + 1 # 16	SGRP-4	SGRS-4-58
3 # 12 + 1 # 14	SGRP-4	SGRS-4-58
2 # 12 + 2 # 14	SGRP-4	SGRS-4-58
3 # 12 + 1 # 18	SGRP-4	SGRS-4-58
3 # 12 + 1 # 16	SGRP-4	SGRS-4-58
1 # 14 + 1 # 22	SGRP-1	SGRS-1-58
1 # 14 + 1 # 20	SGRP-2	SGRS-2-58
1 # 14 + 2 # 20	SGRP-2	SGRS-2-58

Wire Combinations	Splash-proof	Sealed
4 # 14 + 1 # 16	SGRP-4	SGRS-4-58
4 # 14 + 2 # 16	SGRP-4	SGRS-4-58
5 # 14	SGRP-4	SGRS-4-58
5 # 14 + 1 # 16	SGRP-4	SGRS-4-58
1 # 16 + 3 # 18	SGRP-3	SGRS-3-58
1 # 16 + 2 # 18 + 2 # 20	SGRP-3	SGRS-3-58
1 # 16 + 5 # 20	SGRP-3	SGRS-3-58
1 # 16 + 2 # 20	SGRP-2	SGRS-2-58
6 # 16	SGRP-3	SGRS-3-58
5 # 16 + 1 # 18	SGRP-3	SGRS-3-58
5 # 16 + 1 # 20	SGRP-3	SGRS-3-58
5 # 16	SGRP-3	SGRS-3-58
4 # 16 + 2 # 18	SGRP-3	SGRS-3-58
4 # 16 + 1 # 18 + 1 # 20	SGRP-3	SGRS-3-58
4 # 16 + 1 # 18	SGRP-3	SGRS-3-58
4 # 16 + 2 # 20	SGRP-3	SGRS-3-58
4 # 16 + 1 # 20	SGRP-3	SGRS-3-58
4 # 16	SGRP-3	SGRS-3-58
3 # 16 + 3 # 18	SGRP-3	SGRS-3-58
3 # 16 + 2 # 18 + 1 # 20	SGRP-3	SGRS-3-58
3 # 16 + 2 # 18	SGRP-3	SGRS-3-58
3 # 16 + 1 # 18 + 2 # 20	SGRP-3	SGRS-3-58
3 # 16 + 1 # 18 + 1 # 20	SGRP-3	SGRS-3-58
3 # 16 + 1 # 18	SGRP-3	SGRS-3-58
3 # 16 + 3 # 20	SGRP-3	SGRS-3-58
3 # 16 + 2 # 20	SGRP-3	SGRS-3-58
3 # 16 + 1 # 20	SGRP-3	SGRS-3-58
3 # 16	SGRP-2	SGRS-2-58
2 # 16 + 4 # 18	SGRP-3	SGRS-3-58
2 # 16 + 3 # 18 + 1 # 20	SGRP-3	SGRS-3-58
2 # 16 + 3 # 18	SGRP-3	SGRS-3-58
2 # 16 + 2 # 18 + 2 # 20	SGRP-3	SGRS-3-58
2 # 16 + 2 # 18 + 1 # 20	SGRP-3	SGRS-3-58
2 # 16 + 2 # 18	SGRP-3	SGRS-3-58
—	—	—

Wire Combinations	Splash-proof	Sealed
1 # 18 + 5 # 20	SGRP-2	SGRS-2-58
2 # 18	SGRP-1	SGRS-1-58
2 # 18 + 1 # 22	SGRP-1	SGRS-1-58
2 # 18 + 1 # 20	SGRP-2	SGRS-2-58
2 # 18 + 2 # 20	SGRP-2	SGRS-2-58
2 # 18 + 3 # 20	SGRP-2	SGRS-2-58
2 # 18 + 4 # 20	SGRP-3	SGRS-3-58
3 # 18	SGRP-2	SGRS-2-58
3 # 18 + 1 # 20	SGRP-2	SGRS-2-58
3 # 18 + 2 # 20	SGRP-3	SGRS-3-58
3 # 18 + 3 # 20	SGRP-3	SGRS-3-58
4 # 18	SGRP-2	SGRS-2-58
4 # 18 + 1 # 20	SGRP-3	SGRS-3-58
4 # 18 + 2 # 20	SGRP-3	SGRS-3-58
5 # 18	SGRP-3	SGRS-3-58
5 # 18 + 1 # 20	SGRP-3	SGRS-3-58
6 # 18	SGRP-3	SGRS-3-58
1 # 20 + 1 # 22	SGRP-1	SGRS-1-58
1 # 20 + 2 # 22	SGRP-1	SGRS-1-58
1 # 20 + 3 # 22	SGRP-1	SGRS-1-58
1 # 20 + 4 # 22	SGRP-1	SGRS-1-58
2 # 20	SGRP-1	SGRS-1-58
2 # 20 + 1 # 22	SGRP-1	SGRS-1-58
2 # 20 + 2 # 22	SGRP-1	SGRS-1-58
2 # 20 + 3 # 22	SGRP-1	SGRS-1-58
3 # 20	SGRP-1	SGRS-1-58
3 # 20 + 1 # 22	SGRP-1	SGRS-1-58
4 # 20	SGRP-2	SGRS-2-58
5 # 20	SGRP-2	SGRS-2-58
6 # 20	SGRP-2	SGRS-2-58
3 # 22	SGRP-1	SGRS-1-58
4 # 22	SGRP-1	SGRS-1-58
5 # 22	SGRP-1	SGRS-1-58
6 # 22	SGRP-1	SGRS-1-58
—	—	—

Catalog 1654025
Revised 3-13

www.te.com

Dimensions are shown for reference purposes only. Specifications subject to change.

Dimensions are in millimeters unless otherwise specified.

USA: +1 800 522 6752
Asia Pacific: +86 0 400 820 6015
UK: +44 800 267 666

For additional support numbers please visit www.te.com

SolderGrip Closed End Connector Splices (Continued)

Product Characteristics

Material			
Insulation	Radiation-crosslinked, transparent heat-shrinkable polyvinylidene fluoride		
Solder preform with flux (SGRS-X-58)	SN42Bi58, ROM1 flux per ANSI-J-STD-004 (RA flux).		
Solder preform with flux (SGRP, SGRS)	Sn 60 Pb 40, ROM1 flux per ANSI-J-STD-004 (RA flux).		
Sealing insert (SGRS-X-58, SGRS)	Hot melt adhesive		
Spiral wound insert	Copper alloy		
Physical	**Unit**	**Method of test**	**Requirement**
Dimensions	inches	RB-109	See product dimensions.
Electromechanical	**Unit**	**Method of test**	**Typical values**
Dielectric withstand voltage	kilovolts	RB-109	2.0
Static heating	degrees	RB-109	Less than 50°C rise
Environmental*	**Unit**	**Method of test**	**Requirement**
Insulation resistance after water immersion (SGRS only)	megohms	RB-109	100
Contact resistance after testing	milliohms	RB-109	Less than 6 milliohms
Operating condition	**Unit**	**Method of test**	**Value**
Temperature rating	—	—	-55°C to 125°C [-67°F to 257°F]
Voltage rating	volts	—	600

*Immersion resistance sealing is dependent on the wire combinations used. The user should test specific wire combinations. Refer to RB-109 TE specification for procedures.

Approvals and Reference Documents

Agency Approvals	UL, CUL E87681
Reference documents	TE Specification RB-109 for splices Specification Control Drawings Splices—Non Sealed (SGRP-X), Splices—Sealed (SGRS-X)

Note: SGRS-X-58 is not UL approved.

Installation

The SolderGrip product is pushed onto the conductors with a twisting motion. With the product in place, installation can be completed with the proper selection and use of heating tools and reflectors.

Either of the following TE heating tools is recommended:

- HL1910E/HL2010E
- CV-1981

Refer to TE installation procedure RPIP-820-00 for detailed instructions and recommended reflector attachments.

You will find ordering information for these tools in Section 10.

Dimensions are shown for reference purposes only. Specifications subject to change.

Dimensions are in millimeters unless otherwise specified.

USA: +1 800 522 6752
Asia Pacific: +86 0 400 820 6015
UK: +44 800 267 666

For additional support numbers please visit www.te.com

DuraSeal Heat-Shrinkable, Environmentally Sealed, Nylon-Insulated Crimp Splices

Product Facts

- Protects splices from water, condensation, salt, and corrosion
- Provides strain relief
- Protects against vibration in rugged environments
- Completely insulates and protects electrical connections
- Has adhesive lining for protection that is more reliable than conventional splices
- UL, CUL, and Lloyd's listed

Applications

- Automotive/truck wiring repair and maintenance.
- Automotive accessory installations.
- OEM automotive/truck/RV wire harness fabrication.
- Marine electronics.
- Fleet maintenance.
- Commercial wiring (pumps/pools/spas).
- Appliances.

Specifications/Approvals

Series	Agency	TE
D-406	UL and CUL listed 91J4, File E87681	RB-107
—	Lloyd's listed, File 65 247 HH 02-93	—

Note: D406-0034 is not UL approved.

Product Dimensions

Butt Splices

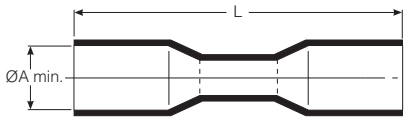

Part No.	Butt Splice Dimensions A Min.	Butt Splice Dimensions L Nom.	Color	Conductor	Wire Dimensions Insulation O.D. (Max.)	Wire Dimensions Insulation O.D. (Min.)
D-406-0034	3.00 [.118]	31.5 [1.24]	Yellow	26-24	3.00 [.118]	1.40 [.055]
D-406-0001	3.70 [.146]	31.5 [1.24]	Red	22–18	3.70 [.146]	1.40 [.055]
D-406-0002	4.60 [.181]	31.5 [1.24]	Blue	16–14	4.60 [.181]	2.00 [.080]
D-406-0003	6.50 [.255]	37.5 [1.48]	Yellow	12–10	6.50 [.255]	2.80 [.110]

Available in:	
Americas	■
Europe	■
Asia Pacific	■

Catalog 1654025
Revised 3-13

www.te.com

Dimensions are shown for reference purposes only. Specifications subject to change.

Dimensions are in millimeters unless otherwise specified.

USA: +1 800 522 6752
Asia Pacific: +86 0 400 820 6015
UK: +44 800 267 666

For additional support numbers please visit www.te.com

DuraSeal Heat-Shrinkable, Environmentally Sealed, Nylon-Insulated Crimp Splices (Continued)

Product Selection Process

1. Determine wire size.
2. Select part number.

Wire Size AWG	mm²	Part No.	Color
26-24	0.15-0.25	D-406-0034	Yellow
22–18	0.5-1.0	D-406-0001	Red
16–14	1.2–2.5	D-406-0002	Blue
12–10	3–6	D-406-0003	Yellow

Product Characteristics (Typical)

Operating temperature	-55°C to 125°C [-67°F to 257°F]
Shrink ratio	Approximately 2:1
Physical properties	Cut-through resistance: 31 kg [70 lb] Wire pullout after crimping and recovery: red: 11.3 kg [25 lb]; blue: 22.7 kg [50 lb]; yellow: 27.2 kg [60 lb] Not flame-retardant No cracking after heat aging for 168 h at 160°C [320°F]
Chemical properties	Solvent resistance: isopropyl alcohol, trichloroethylene, gasoline, battery acid, diesel fuel, motor oil, antifreeze, brake fluid, 5% salt water
Electrical properties	Dielectric strength: 2500 Vac Insulation resistance: 1000 megohms at 100 Vdc

Installation Requirements

For proper installation of these devices, the correct crimp tool and a heating tool with a reflector attachment must be used. The AD-1522 crimp tool and HL1910E/ HL2010E heating tool are recommended.

You will find ordering information for these tools in Section 10.

Refer to TE installation procedure RPIP-821-00 for detailed instructions.

Installation

1. Select splice of appropriate size. Strip wire 7.5 mm (5/16 in). Insert into crimp barrel.

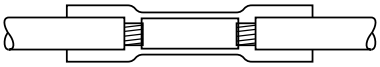

2. Crimp using AD-1522 crimp tool for preinsulated crimps.

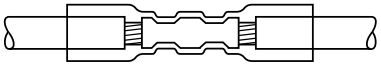

3. Heat crimped splice with heat gun until tubing recovers and adhesive flows.

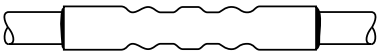

Dimensions are shown for reference purposes only. Specifications subject to change.

Dimensions are in millimeters unless otherwise specified.

USA: +1 800 522 6752
Asia Pacific: +86 0 400 820 6015
UK: +44 800 267 666

For additional support numbers please visit www.te.com

PolyCrimp Heat-Shrinkable Polyethylene Crimp Splices

Product Facts

- **One-piece product reduces inventory management**
- **Translucent tubing allows visual inspection**
- **Color coded for easy selection of correct AWG**
- **Dual wall polyethylene tubing provides strain relief and protection against environment**

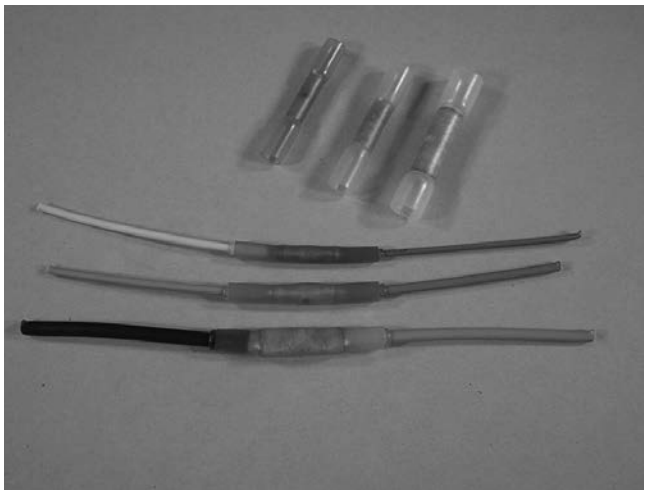

Applications

- Alarms.
- Marine electronics.
- Mass transit signal wire.
- Telecom aerial splices.
- Traffic light junction boxes.
- Commercial wiring (pumps).
- Heavy industrial environments.

Specifications/Approvals

Series	TE
C203	D-5203

Product Dimensions

Butt Splices

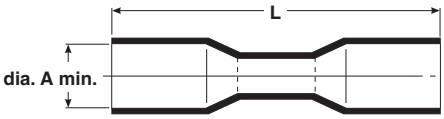

Part No.	Butt Splice Dimensions A Min.	Butt Splice Dimensions L Nom.	Color	Conductor	Wire Dimensions Insulation O.D. (Max.)	Wire Dimensions Insulation O.D. (Min.)
C-203-01	3.68 [.145]	31.75 [1.25]	Red	22–18	3.56 [.140]	1.40 [.055]
C-203-02	4.57 [.180]	31.75 [1.25]	Blue	16–14	4.45 [.175]	2.03 [.080]
C-203-03	6.35 [.250]	38.10 [1.50]	Yellow	12–10	6.22 [.245]	—

Available in:	
Americas	■
Europe	■
Asia Pacific	■

Dimensions are shown for reference purposes only. Specifications subject to change.

Dimensions are in millimeters unless otherwise specified.

USA: +1 800 522 6752
Asia Pacific: +86 0 400 820 6015
UK: +44 800 267 666

For additional support numbers please visit www.te.com

PolyCrimp Heat-Shrinkable Polyethylene Crimp Splices (Continued)

Product Selection Process

1. Determine wire size.
2. Select part number.

Wire Size AWG	mm²	Part No.	Color
22–18	0.38–0.95	C-203-01	Red
16–14	1.2–2.5	C-203-02	Blue
12–10	3–6	C-203-03	Yellow

Product Characteristics (Typical)

Operating temperature	-55°C to 125°C [-67°F to 257°F]
Shrink ratio	Approximately 2:1
Physical properties	Wire pullout after crimping and recovery: red: 6.8 kg [15 lb]; blue: 18.14 kg [40 lb]; yellow: 22.7 kg [50 lb]
Chemical properties	Meets electrical test after conditioning in diesel fuel, brake fluid, ASTM fuel C and engine degreaser.
Electrical properties	Dielectric strength: 2500 Vac Insulation resistance: 1000 megohms at 100 Vdc Voltage rating: 600 Volts max.

Catalog 1654025
Revised 3-13

www.te.com

Dimensions are shown for reference purposes only. Specifications subject to change.

Dimensions are in millimeters unless otherwise specified.

USA: +1 800 522 6752
Asia Pacific: +86 0 400 820 6015
UK: +44 800 267 666

For additional support numbers please visit www.te.com

Cold Applied Splices

The cold applied splice product line is designed as a single component in-line splice to provide high environmental protection to seal the termination from moisture and provide electrical isolation. If moisture is present, it can lead to insulation failure and breakdown of the electrical connection.

In this product, sealing is achieved by replacing traditional methods, such as grommets, greases and tapes with a novel TE gel technology. The electrical isolation is provided by a polymer outer layer.

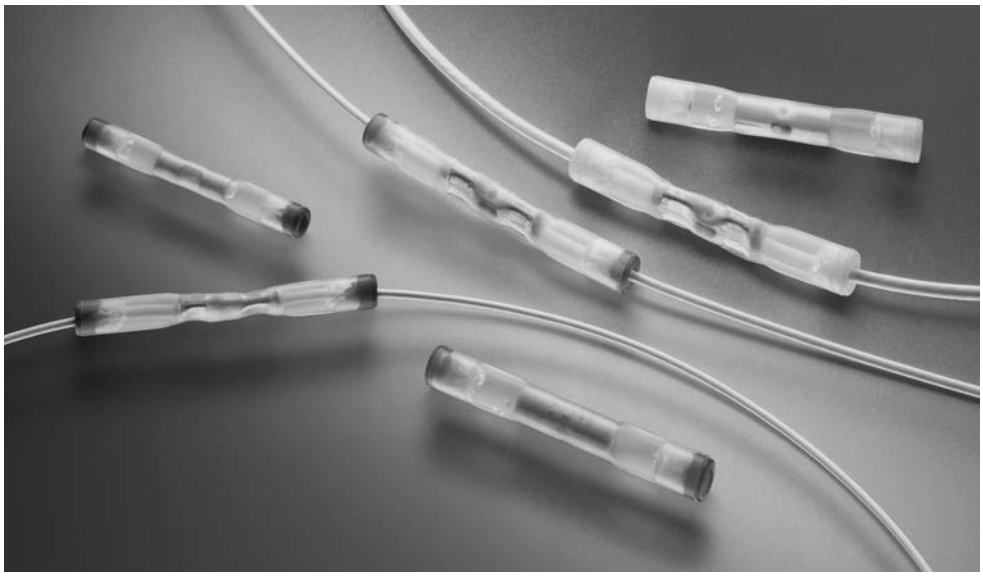

Product Facts

- **One-step termination and environmental protection**
- **No heating required for installation — safe for use on fueled aircraft**
- **Reliable in a wide variety of environmental conditions**
- **Achieve environmental performance while maintaining:**
  - **Small profile**
  - **Electrical performance**
- **Easy installation and application flexibility**
- **Prevents water ingress under permanent pressure/weight**

Applications

Ideal for aerospace and defense application where performance and reliability is essential

Designed to provide an immersion resistant in-line splice on 1:1 wires

- Wide range from 26 AWG to 12 AWG
- Nickel-plated, silver-plated, and tin-plated conductors

Protects and seals on all conventional MIL spec and commercial wire insulation systems

Standards & Specs

Meets or exceeds the following:

- SAE-AMS-DTL-23053/8 (Insulation sleeve)
- SAE-AS81824/12

Under qualification for SAE AS81824 and AS81824/12

Ordering Information

Minimum order quantity: 500 pieces for all sizes

Environmental

Temperature range: -65˚C to 150˚C

Dielectric strength: 2,500 V Maximum

Insulation resistance: 5,000 Mega-ohms minimum

Altitude immersion: 75,000 ft.

Fluid resistance: MIL-L-7808, MIL-L-23699, MIL-PRF-5605 (Hydraulic), MIL-A-8243, MIL-C-25769, and MIL-T-5624 (JP-5)

Electrical

Current rating as defined by the size of crimp, guage of wire and specification

Mechanical

Cold splice tensile strenth exceeds strength of spliced wire

Physical or Other Properties

Cross-linked gel technology:

- Proven gel sealing system
- Versatile gel closure
- Non-flowing gel

Materials

Insulation sleeve: Transparent polyvinylidene fluoride

Metal crimp splice: Tin plated copper

End caps: Thermoplastic, color coded

Gel: Clear flame-retardant silicone based gel

Application Tooling

Cold Applied Crimp Tool: AD-1381

Under qualification per M22520/44-01

AD-1381 or approved M22520/44-01 crimp tool **must be** used for proper installation of these devices

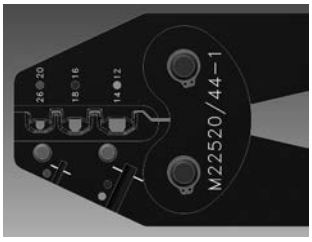

AD-1381 Tool

Catalog 1654025
Revised 3-13

www.te.com

Dimensions are shown for reference purposes only. Specifications subject to change.

Dimensions are in millimeters unless otherwise specified.

USA: +1 800 522 6752
Asia Pacific: +86 0 400 820 6015
UK: +44 800 267 666

For additional support numbers please visit www.te.com

Cold Applied Splices (Continued)

Part Numbers

Part Number	Wire Range	L±1.0 [±0.040]	øA±0.5 [±0.020)	øB±0.25 [±0.010]	øC±0.5 [±0.020]	E±0.25 [±0.010]	J±0.25 [±0.010]	End Cap Color Code (Both Ends)
D-436-36-COLD	26-24-22-20	36.8 [1.450]	4.2 [0.165)	2.0 [0.080]	3.7 [0.145]	12.1 [0.475]	12.7 [0.500]	Red
D-436-37-COLD	18-16	38.7 [1.525]	5.1 [0.200)	2.9 [0.115]	4.5 [0.175]	14.3 [0.565]	12.7 [0.500]	Blue
D-436-38-COLD	14-12	38.7 [1.525]	5.9 [0.235]	3.8 [0.150]	5.2 [0.205]	14.3 [0.565]	12.7 [0.500]	Yellow

Dimensions are in inches.

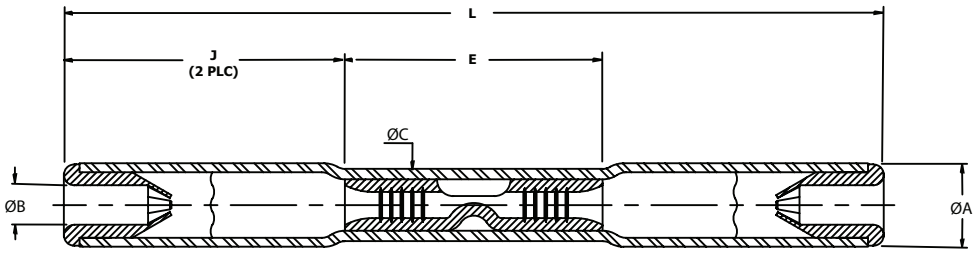

MiniSeal High-Performance, Immersion-Resistant Crimp Splices

Product Facts

- **Immersion-resistant crimp splices are on QPL for SAE-AS-81824**
- **MIL-Spec approval**
- **Small size**
- **Light weight**
- **Insulation and strain relief**
- **Easy installation**

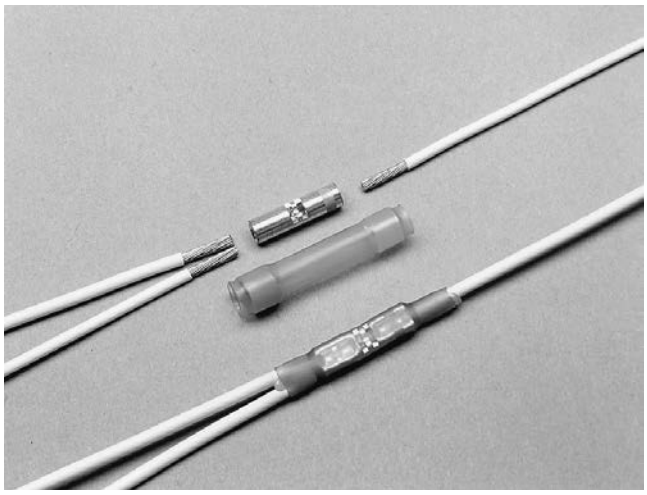

Applications

MiniSeal wire-to-wire splicing products offer solutions for hundreds of aerospace and defense applications. These environment-resistant splices provide excellent reliability, long term performance, MIL-S-81824/1 qualification, and a low installed cost.

MiniSeal crimp splices consist of a plated copper crimp barrel and a separate, heat-shrinkable, transparent sealing sleeve. They can be used on a combination of wires, from 1:1 to 10:10. MiniSeal splices are one of the smallest, lightest, and most environment-resistant splices available. They preserve the electrical integrity of the splice by preventing the penetration of liquids and the resulting chemical and galvanic corrosion.

Available in:	
Americas	■
Europe	■
Asia Pacific	■

Product Selection Process

1. Determine the type of splice required.
   - Stub (parallel) splice:

   - Butt (in-line) splice:

     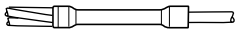

2. Determine which crimp barrel plating is required:
   - Tin plating, recommended for tin or silverplated wire
   - Nickel plating, recommended for nickel-plated wire, or silver-plated wire in applications above 150°C [302°F].
3. Calculate the size of crimp barrel required.

   Using the CMA/mm^2 worksheet on the next page, calculate the total cross section to be spliced by adding the circular mil area (CMA) or square millimeters (mm^2) of each wire.

   Stub splice: Add the CMA or mm^2 of all wires together.

   Butt splice: Calculate each side separately (see example on the worksheet).

   Table A provides the CMA of typical conductors. (Both CMA and mm^2 give the same results, so choose either CMA or mm^2 as your unit of measure for selection purposes and continue to use it for all your selection criteria.)
4. Select the color code for the size crimp barrel required. Using Table B (page 8-23), select the crimp barrel—color-coded red, blue, or yellow—for the CMA or mm^2 you calculated.

   Stub splice: Select the barrel that will accommodate the total cross section.

   Butt splice: Select the smallest barrel that will accommodate the largest CMA/mm^2 required. (Refer to the example in the worksheet for a more specific description.) If the CMA/mm^2 of the smaller side of a butt splice is too small for the size barrel required to fit the larger side, increase the CMA/mm^2 —either by doubling back one wire (stripping the conductor twice the length you would ordinarily strip it and then folding it back) or by adding a filler wire.
5. Determine the type of sealing sleeve required. Some wire insulations will not fit in the holes of the sealing sleeve inserts, so be sure to compare the internal diameter of each hole with the outer diameter of the wire(s) you intend to insert in that hole. To create a reliable seal, place a maximum of two wires in any hole of the sealing sleeve.
6. Select the part number. Turn to the MiniSeal part number selection tables (Tables C and D, page 8-23 and 8-24) and find the table for the type of splice (stub or butt) required.

   Using the appropriate table, find the crimp barrel size range and the size and number of wires for your application. Then select the part number for the type of plating required. The color code accompanying that part number should match the color code you arrived at in Table B, confirming that the part number you have selected is correct.

Catalog 1654025
Revised 3-13

www.te.com

Dimensions are shown for reference purposes only. Specifications subject to change.

Dimensions are in millimeters unless otherwise specified.

USA: +1 800 522 6752
Asia Pacific: +86 0 400 820 6015
UK: +44 800 267 666

For additional support numbers please visit www.te.com

MiniSeal High-Performance, Immersion-Resistant Crimp Splices (Continued)

Table A. CMA of Typical Conductors

Strands	7	19	19	19	19	19	19	19	37
AWG	28	26	24	22	20	18	16	14	12
CMA	177	304	475	754	1216	1900	2426	3831	5874
mm^2	0.09	0.15	0.24	0.38	0.61	0.95	1.21	1.92	2.94

Table B. Crimp Barrel Color Code Selection

CMA Range	1:1 Splice (AWG Size)	Color Code
304–1510	26–20	Red
1058–2680	20–16	Blue
2375–6755	16–12	Yellow

CMA/mm^2 Worksheet

Example:

Application: A butt splice with three AWG 22 wires in one side and one AWG 18 wire in the other side:

The CMA for AWG 22 wire in Table A is 754.

Side one is therefore calculated as follows:

CMA = 3 x 754 = 2262

The other side, where the CMA for AWG 18 is 1900, is calculated as:

CMA = 1 x 1900 = 1900

Using Table B to select the smallest crimp barrel that will easily fit 2262 CMA, the blue barrel is the correct choice.

Wire Number	CMA	mm^2
1		
2		
3		
4		
5		
6		
7		
8		
9		
10		
Total		

Part Number: _____

Table C. Stub (Parallel) Splices

Illustration	Part No. Tin Plated	Part No. Nickel Plated	Crimp Barrel Size Range CMA Min.–Max.	I.D.dimensions Side 1 Sealing Insert	Side 1 Max. No. of Wires	Side 2 Sealing Insert	Side 2 Max. No. of Wires
	D-436-0128 Red	D-436-0119 Red	304–1510	2.16 [.085]	2	1.01 [.040]	2
	D-436-58 Blue	D-436-75 Blue	1058–2680	4.56 [.180]	2	2.28 [.090]	2
	D-436-59 Yellow	D-436-76 Yellow	2375—6755	4.56 [.180]	2	2.28 [.090]	2
	D-436-60 Blue	D-436-77 Blue	1058–2680	2.03 [.080]	10 (2 per hole)	6.35 [.250]	2
	D-436-61 Yellow	D-436-78 Yellow	2375–6755	2.03 [.080]	10 (2 per hole)	6.35 [.250]	2

Catalog 1654025
Revised 3-13

www.te.com

Dimensions are shown for reference purposes only. Specifications subject to change.

Dimensions are in millimeters unless otherwise specified.

USA: +1 800 522 6752
Asia Pacific: +86 0 400 820 6015
UK: +44 800 267 666

For additional support numbers please visit www.te.com

MiniSeal High-Performance, Immersion-Resistant Crimp Splices (Continued)

Table D. Butt (in-line) splices

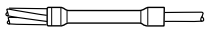

Illustration	Part No. Tin Plated	Part No. Nickel Plated	Crimp Barrel Size Range CMA Min.–Max.	I.D.dimensions Side 1 Sealing Insert	I.D.dimensions Side 1 Max. No. of Wires	I.D.dimensions Side 2 Sealing Insert	I.D.dimensions Side 2 Max. No. of Wires
	D-436-36* Red	D-436-82 D-200-82 Red	304–1510	2.16 [.085]	2	2.16 [.085]	2
	D-436-37* Blue	D-436-83 D-200-83 Blue	1058–2680	2.79 [.110]	2	2.79 [.110]	2
	D-436-38* Yellow	D-436-84 D-200-84 Yellow	2375–6755	4.32 [.170]	2	4.32 [.170]	2
	D-436-0110 Red	D-436-85 Red	304–1510	2.36 [.093]	6	4.06 [.160]	2
	D-436-52 Blue	D-436-86 Blue	1058–2680	2.36 [.093]	6 (2 per hole)	4.06 [.160]	2
	D-436-53 Yellow	D-436-87 Yellow	2375–6755	2.36 [.093]	6 (2 per hole)	4.06 [.160]	2
	D-436-0115 Red	D-436-88 Red	304–1510	2.36 [.093]	6 (2 per hole)	2.36 [.093]	6 (2 per hole)
	D-436-42 Blue	D-436-89 Blue	1058–2680	2.36 [.093]	6 (2 per hole)	2.36 [.093]	6 (2 per hole)
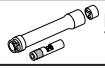	D-436-43 Yellow	D-436-90 Yellow	2375–6755	2.36 [.093]	6 (2 per hole)	2.36 [.093]	6 (2 per hole)

*Qualified to MIL-S-81824/1.

Table E. Crimp Barrel Only

Type	Color Code	Tin-Plated	Nickel Plated	Crimp Barrel Size Range CMA Min. - Max.
Butt (in-line)	Red	D-609-06	D-609-09	304-1510
Butt (in-line)	Blue	D-609-07	D-609-10	1058-2680
Butt (in-line)	Yellow	D-609-08	D-609-11	2350-6755
Stub (Parrel)	Red	D-609-03	D-609-12	304-1510
Stub (Parrel)	Blue	D-609-04	D-609-13	1058-2680
Stub (Parrel)	Yellow	D-609-05	D-609-14	2350-6755

Table F. Sealing Sleeve Only

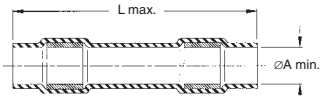

Part No.	Color Code	L Max.	A Min.
D-436-0096	Red	29.2 [1.15]	2.16 [0.085]
D-436-0097	Blue	29.2 [1.15]	2.8 [0.110]
D-436-0098	Yellow	29.2 [1.15]	4.32 [0.170]

Dimensions are shown for reference purposes only. Specifications subject to change.

Dimensions are in millimeters unless otherwise specified.

USA: +1 800 522 6752
Asia Pacific: +86 0 400 820 6015
UK: +44 800 267 666

For additional support numbers please visit www.te.com

MiniSeal High-Performance, Immersion-Resistant Crimp Splices (Continued)

Product Characteristics

Material	
Insulation	Radiation-crosslinked, heat-shrinkable polyvinylidene fluoride (D-436)
Crimp barrel	Tin- or nickel-plated copper
Meltable inserts	Meltable thermoplastic (D-436)
Typical Performance	
Voltage drop	6.9 mV at 4.5 A vs 8.1 mV for an equal length of wire
Tensile strength	Exceeds strength of conductor
Dielectric strength	2.5 kV
Temperature rating	-55°C to 150°C [-67°F to 302°F] (D-436 Series)
Insulation resistance	5000 megohms

Specifications/Approvals

Series	Military
D-436	SAE-AS-81824/1 for D-436-36/37/38

Installation

For proper installation of these devices, the correct crimp tool (TE part number AD-1377) and a heating tool and reflector attachment must be used.

Any one of the following TE heating tools is recommended:

- HL1910E/HL2010E
- AA-400 Super Heater

Refer to TE installation procedure RCPS-200-20 for detailed instructions and recommended reflector attachments.

You will find ordering information for these tools in Section 10.

Dimensions are shown for reference purposes only. Specifications subject to change.

Dimensions are in millimeters unless otherwise specified.

USA: +1 800 522 6752
Asia Pacific: +86 0 400 820 6015
UK: +44 800 267 666

For additional support numbers please visit www.te.com

200° MiniSeal High-Performance, Immersion-Resistant Crimp Splices

Product Facts

- **Immersion-resistant crimp splices while meeting all requirements of SAE-AS-81824/1 (modified for 200°C applications)**
- **Small size**
- **Light weight**
- **Transparent heat-shrinkable insulation sleeve provides environmental protection and strain relief**
- **Splices provide sealing to unetched wire insulations**
- **No need to staffer wire splices**

In-line nickel plated sealed crimp splices for 200˚C applications were developed for the growing needs of high temperature applications in the aerospace and defense industry.

200˚C MiniSeal crimp splices provides the smallest, lightest, and the most environmental-resistant splices available, while meeting all requirements of SAE-AS81824/1 (modified for 200˚C applications).

Applications

MiniSeal wire-to-wire splicing products are ideal for aerospace and defense applications where performance, reliability or size reduction is essential.

Designed to provide an immersion resistant in-line splice on 1:1 wires for the following: wire range from 26 AWG to 12 AWG; nickel-plated conductors and insulation rated for at least 135˚C.

Available in:	
Americas	■
Europe	■
Asia Pacific	■

Catalog 1654025
Revised 3-13

www.te.com

Dimensions are shown for reference purposes only. Specifications subject to change.

Dimensions are in millimeters unless otherwise specified.

USA: +1 800 522 6752
Asia Pacific: +86 0 400 820 6015
UK: +44 800 267 666

For additional support numbers please visit www.te.com

200° MiniSeal High-Performance, Immersion-Resistant Crimp Splices (Continued)

Product Characteristics

Material	
Insulation	Heat-shrinkable, transparent blue, radiation cross-linked modified fluoropolymer
Crimp splicer	Base Metal: Copper alloy 101 or 102 per ASTM B75 Plating: Nickel per SAE AMS-QQ-N-290 Color Code: see table below
Meltable rings	Environment resistant modified thermoplastic fluoroelastomer Color: Light blue
Typical Performance	
Voltage drop	6.9 mV at 4.5 A vs 8.1 mV for an equal length of wire
Tensile strength	Exceeds strength of conductor
Dielectric strength	2.5 kV
Temperature rating	-55˚C to 200°C [-67°F to 392°F]
Insulation resistance	5000 megohms

Specifications/Approvals

Series	Military
D-200	Meets the requirements of SAE-AS-81824

Part Numbers

Part No.	Color Code	Part Number
D-200-82	Red	D17660-000
D-200-83	Blue	A36675-000
D-200-84	Yellow	C60253-000

Product Dimensions

Product Name	Product Rev.	I.D.* a. min b. max	Crimp Splicer øA	øB	C	D	E max.	Color Code
D-200-82	A	2.16 (0.085) 0.64 (0.025)	1.27 (0.050) 1.14 (0.045)	2.03 (0.080) 1.91 (0.075)	12.95 (0.510) 12.45 (0.490)	6.22 (0.245) 5.72 (0225)	0.38 (0.015)	Red
D-200-83	A	2.79 (0.110) 0.64(0.025)	1.75 (0.069) 1.63 (0.064)	2.70 (0.106) 2.57 (0.101)	14.86 (0.585) 14.35 (0.565)	7.11 (0.280) 6.60 (0.260)	0.51 (0.020)	Blue
D-200-84	A	4.32 (0.170) 0.64 (0.025)	2.60 (0.102) 2.46 (0.097)	3.89 (0.153) 3.73 (0.147)	14.86 (0.585) 14.35 (0.565)	7.11 (0.280) 6.60 (0.260)	1.27 (0.050)	Yellow

*I.D.: a- As received; b- After unrestricted recovery thru meltable insert.

Product Name	MIL Spec Equivalent Size	Wire Range	Wgt. Lbs/Mpc max.
D-200-82	M81824/1-1	26-20	1.02
D-200-83	M81824/1-2	20-16	1.61
D-200-84	M81824/1-3	16-12	2.72

Catalog 1654025
Revised 3-13

www.te.com

Dimensions are shown for reference purposes only. Specifications subject to change.

Dimensions are in millimeters unless otherwise specified.

USA: +1 800 522 6752
Asia Pacific: +86 0 400 820 6015
UK: +44 800 267 666

For additional support numbers please visit www.te.com

Introduction

TE insulated electrical terminal products provide reliable, repeatable, and rugged examples of terminals available. We start on the front end with terminal sizes and configurations that meet or exceed industry standards in terms of material selection, surface treatment, and electrical performance.

Here the comparison stops. What separates Raychem brand products from the rest of the industry are the materials and termination techniques used on the back end of the products, which provide unparalleled value.

Products include:

- *DuraSeal heat-shrinkable nylon crimp products,* which protect against water, condensation, salt, and corrosion. Their tough, heat-shrinkable nylon tubing resists abrasion and cut-through damage, provides strain relief, and protects against vibration damage. DuraSeal products are simple and quick to install using a crimp tool and a heat source. They accommodate a wide range of wire sizes and are color-coded for easy identification, yet are transparent for visual inspection of the finished splice.
- *SolderGrip heat-shrinkable twist-on products,* which utilize a spiral copper coil that grips and compresses the conductors and allows a prefluxed solder ring to flow to the center of the splicing area, resulting in a highly reliable, repeatable joint. SolderGrip terminals use a durable polyvinylidene fluoride heat-shrinkable tubing that protects the electrical joint and provides insulation and strain relief. The SolderGrip technology is a reliable means of terminating more than two conductors time after time. SolderGrip terminals can terminate a variety of conductor types (solid and stranded) and platings. Terminations on more than eight individual conductors in a single joint have been successfully demonstrated using this product.

DuraSeal product delivers protected electrical joints on industry standard terminals and is suitable for harsh environments.

DuraSeal Heat-Shrinkable Environmentally Sealed, Nylon Insulated Crimp Terminals and Disconnects

Product Facts

- Resistance to moisture and abrasion
- Strain relief
- Protection from wire pull-out
- Easy installation
- UL and CUL listed

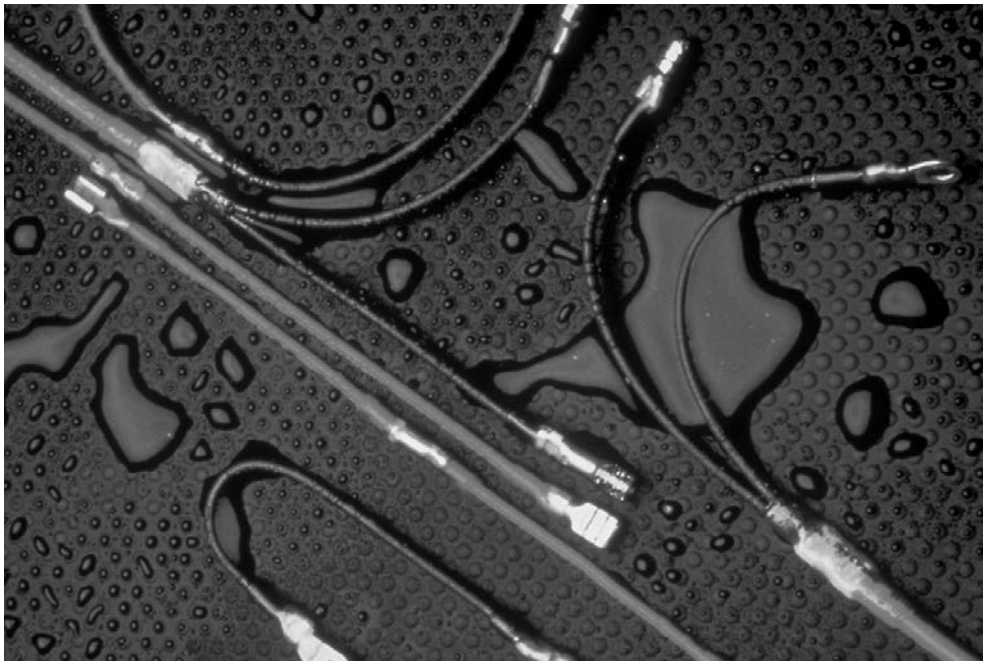

Applications

DuraSeal products insulate and protect electrical connections from mechanical abuse, wire pull-out, and abrasion while resisting water, salt, and other contaminant's.

DuraSeal devices provide a tough, environmentally sealed wire connection. Their crimp barrel or terminal, encased in rugged, heat-shrinkable nylon tubing lined with a special hot-melt adhesive, resists damage from abrasions and cuts.

DuraSeal devices retain flexibility and impact-resistance long after similar products have become brittle.

DuraSeal devices accommodate wire gauge sizes 22 to 10. They are color-coded for easy identification of gauge sizes, yet transparent for inspection of the finished splice.

Approvals and Reference Documents

Agency approvals	UL listed component, file E87681, terminals except quick connect terminals; file E157833, quick connect terminals
Reference documents	TE specifications RB-108, Specification DuraSeal crimp terminals DuraSeal selection guide (H54153) DuraSeal installation guidelines (H54154)

Available in:	
Americas	■
Europe	■
Asia Pacific	■

Catalog 1654025
Revised 3-13

www.te.com

Dimensions are shown for reference purposes only. Specifications subject to change.

Dimensions are in millimeters unless otherwise specified.

USA: +1 800 522 6752
Asia Pacific: +86 0 400 820 6015
UK: +44 800 267 666

For additional support numbers please visit www.te.com

DuraSeal Heat-Shrinkable Environmentally Sealed, Nylon Insulated Crimp Terminals and Disconnects (Continued)

Product Characteristics

	Property	Unit	Requirement	Method of Test
Physical	Dimensions Tensile strength	Inches Pounds	None 8 to 40 lbs depending on AWG	See product dimensions UL486C, IEC512-8
	Property	**Unit**	**Typical value**	**Method of Test**
Electrical	Voltage drop Insulation resistance Dielectric withstand voltage	Millivolts Megohms Kilovolts	Less than equal length of wire 103 min. 2.5	MIL-S-81824, IEC512-2 MIL-STD-202 method 302 MIL-STD-202F method 301, IEC512-2
	Property	**Unit**	**Requirement**	**Method of Test**
Chemical	Diesel fuel Brake fluid Antifreeze 5% salt water Motor oil	—	Meet electrical test listed above after conditioning.	ASTM D 3032, ESA-603D
Environmental (Fluid)	Humidity Immersion Vibration Bending Thermal shock Heat aging (168h @ 85°C [185°F) Salt spray	—	Meet electrical test listed above after conditioning.	MIL-STD-202F method 106, IEC68-2-30 MIL-STD-202F condition C, IEC68-2-14 test NC MIL-STD-202F method 201, IEC68-2-6 UL486C, IEC512-8 MIL-STD-202F method 107, IEC68-2-14 test N MIL-STD-202F, IEC68-2-2 MIL-STD-202F method 101, IEC68-2-11
Operating conditions	Temperature rating Minimum shrink temperature Voltage rating	—	-55°C to +125°C [-67°F to -257°F] 180°C [356°F] 600 Volt max	None None None

Fork Terminals

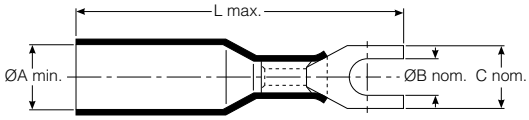

Part No.	Fork Terminal Dimensions					Color	Insulation Conductor (AWG)	Wire Dimensions	
	A Min.	Stud Size		C Nom.	L Max.			Insulation O.D. (Max.)	O.D. (Min.)
		Metric	Imperial						
B-106-2401	3.81 [.15]	M4	8	7.87 [.31]	32.00 [1.26]	Red	22–18	3.81 [.150]	1.40 [.055]
B-106-2402	4.57 [.18]	M4	8	7.87 [.31]	35.05 [1.38]	Blue	16–14	4.45 [.175]	2.00 [.080]
B-106-2403	6.35 [.25]	M4	8	7.87 [.31]	38.10 [1.50]	Yellow	12–10	6.35 [.250]	2.79 [.110]
B-106-2502	4.57 [.18]	M5	10	9.91 [.39]	35.05 [1.38]	Blue	16–14	4.45 [.175]	2.00 [.080]
B-106-2503	6.35 [.25]	M5	10	9.91 [.39]	40.15 [1.58]	Yellow	12–10	6.35 [.250]	2.79 [.110]

Dimensions are shown for reference purposes only. Specifications subject to change.

Dimensions are in millimeters unless otherwise specified.

USA: +1 800 522 6752
Asia Pacific: +86 0 400 820 6015
UK: +44 800 267 666

For additional support numbers please visit www.te.com

DuraSeal Heat-Shrinkable Environmentally Sealed, Nylon Insulated Crimp Terminals and Disconnects (Continued)

Ring Terminals

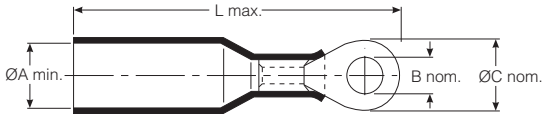

Part No.	Ring Terminal Dimensions					Color	Wire Dimensions		
	A Min.	Stud Size		C Nom.	L Max.		Insulation Conductor (AWG)	Insulation O.D. (Max.)	O.D. (Min.)
		Metric	Imperial						
B-106-1401	3.81 [.15]	M4	8	7.88 [.31]	32.00 [1.26]	Red	22–18	3.81 [.150]	1.40 [.055]
B-106-1501	3.81 [.15]	M5	10	9.91 [.39]	34.04 [1.34]	Red	22–18	3.81 [.150]	1.40 [.055]
B-106-1601	3.81 [.15]	M6	1/4	11.94 [.47]	36.07 [1.42]	Red	22–18	3.81 [.150]	1.40 [.055]
B-106-1801	3.81 [.15]	M8	5/16	13.97 [.55]	39.12 [1.54]	Red	22–18	3.81 [.150]	1.40 [.055]
B-106-1991	3.81 [.15]	M10	3/8	17.78 [.70]	43.18 [1.70]	Red	22–18	3.81 [.150]	1.40 [.055]
B-106-1402	4.57 [.18]	M4	8	7.88 [.31]	33.02 [1.30]	Blue	16–14	4.45 [.175]	2.00 [.080]
B-106-1502	4.57 [.18]	M5	10	9.91 [.39]	35.05 [1.38]	Blue	16–14	4.45 [.175]	2.00 [.080]
B-106-1602	4.57 [.18]	M6	1/4	11.94 [.47]	36.58 [1.44]	Blue	16–14	4.45 [.175]	2.00 [.080]
B-106-1802	4.57 [.18]	M8	5/16	13.97 [.55]	40.13 [1.58]	Blue	16–14	4.45 [.175]	2.00 [.080]
B-106-1992	4.57 [.18]	M10	3/8	17.78 [.70]	43.94 [1.73]	Blue	16–14	4.45 [.175]	2.00 [.080]
B-106-1403	6.35 [.25]	M4	8	7.88 [.31]	38.10 [1.50]	Yellow	12–10	6.35 [.250]	2.79 [.110]
B-106-1503	6.35 [.25]	M5	10	9.91 [.39]	40.13 [1.58]	Yellow	12–10	6.35 [.250]	2.79 [.110]
B-106-1603	6.35 [.25]	M6	1/4	11.94 [.47]	41.66 [1.64]	Yellow	12–10	6.35 [.250]	2.79 [.110]
B-106-1803	6.35 [.25]	M8	5/16	13.97 [.55]	45.21 [1.78]	Yellow	12–10	6.35 [.250]	2.79 [.110]
B-106-1993	6.35 [.25]	M10	3/8	17.78 [.70]	46.99 [1.85]	Yellow	12–10	6.35 [.250]	2.79 [.110]

Catalog 1654025
Revised 3-13

www.te.com

Dimensions are shown for reference purposes only. Specifications subject to change.

Dimensions are in millimeters unless otherwise specified.

USA: +1 800 522 6752
Asia Pacific: +86 0 400 820 6015
UK: +44 800 267 666

For additional support numbers please visit www.te.com

DuraSeal Heat-Shrinkable Environmentally Sealed, Nylon Insulated Crimp Terminals and Disconnects (Continued)

Push-on Terminals

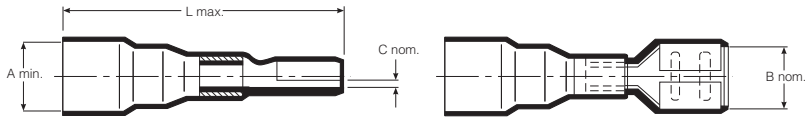

Part No.	Tab Size (inches)	Push-on Terminal Dimensions				Color	Insulation Conductor (AWG)	Wire Dimensions	
		A Min.	B Nom.	C Nom.	L Max.			Insulation O.D. (Max.)	O.D. (Min.)
B-106-3631	.250 x .032	3.81 [.150]	6.35 [.250]	.81 [.032]	30.48 [1.200]	Red	22–18	3.81 [.150]	1.40 [.055]
B-106-3632	.250 x .032	4.57 [.180]	6.35 [.250]	.81 [.032]	32.00 [1.260]	Blue	16–14	4.45 [.175]	2.00 [.080]
B-106-3633	.250 x .032	6.35 [.250]	6.35 [.250]	.81 [.032]	33.02 [1.300]	Yellow	12–10	6.35 [.250]	2.79 [.110]
B-106-3281	.110 x .020	3.81 [.150]	2.79 [.110]	.51 [.020]	22.86 [.900]	Red	22–18	3.81 [.150]	1.40 [.055]
B-106-3481	.187 x .020	3.81 [.150]	4.75 [.187]	.51 [.020]	30.48 [1.200]	Red	22–18	3.81 [.150]	1.40 [.055]

Tab Terminals

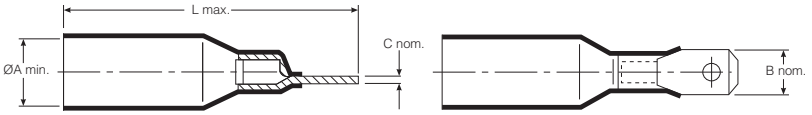

Part No.	Tab Size (inches)	Tab Terminal Dimensions				Color	Insulation Conductor (AWG)	Wire Dimensions	
		A Min.	B Nom.	C Nom.	L Max.			Insulation O.D. (Max.)	O.D. (Min.)
B-106-4631	.250 x .032	3.81 [.150]	6.35 [.250]	.81 [.032]	30.48 [1.20]	Red	22–18	3.81 [.150]	1.40 [.055]
B-106-4632	.250 x .032	4.57 [.180]	6.35 [.250]	.81 [.032]	32.00 [1.26]	Blue	16–14	4.45 [.175]	2.00 [.080]

Dimensions are shown for reference purposes only. Specifications subject to change.

Dimensions are in millimeters unless otherwise specified.

USA: +1 800 522 6752
Asia Pacific: +86 0 400 820 6015
UK: +44 800 267 666

For additional support numbers please visit www.te.com

DuraSeal Heat-Shrinkable Environmentally Sealed, Nylon Insulated Crimp Terminals and Disconnects (Continued)

Pin Terminals

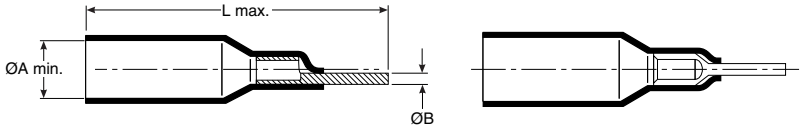

Part No.	Pin Terminal Dimensions			Color	Wire Dimensions		
	A Min.	B Nom.	L Max.		Conductor (AWG)	Insulation O.D. (Max.)	Insulation O.D. (Min.)
B-106-6201	3.81 [.150]	2.00 [.080]	30.99 [1.220]	Red	22–18	3.81 [.150]	1.40 [.055]

Bullet Terminals

Fig. 1

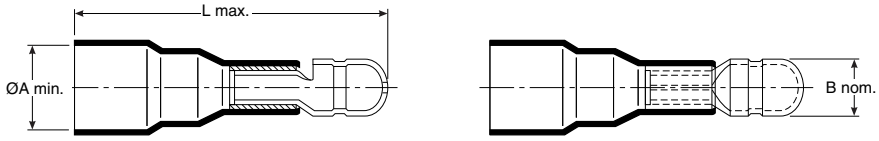

Fig. 2

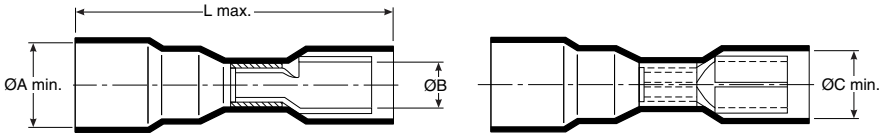

Part No.	Fig.	Type	Bullet Terminal Dimensions				Color	Conductor (AWG)	Wire Dimensions	
			A Min.	B Nom.	C Min.	L Max.			Insulation O.D. (Max.)	Insulation O.D. (Min.)
B-106-7401	1	M	3.81 [.150]	3.81 [.150]	—	33.53 [1.32]	Red	22–18	3.81 [.150]	1.40 [.055]
B-106-7502	1	M	4.57 [.180]	5.08 [.200]	—	34.54 [1.36]	Blue	16–14	4.45 [.175]	2.00 [.080]
B-106-8401	2	F	3.81 [.150]	3.81 [.150]	5.59 [.220]	30.48 [1.20]	Red	22–18	3.81 [.150]	1.40 [.055]
B-106-8502	2	F	4.57 [.180]	5.08 [.200]	6.10 [.240]	32.51 [1.28]	Blue	16–14	4.45 [.175]	2.00 [.080]

Dimensions are shown for reference purposes only. Specifications subject to change.

Dimensions are in millimeters unless otherwise specified.

USA: +1 800 522 6752
Asia Pacific: +86 0 400 820 6015
UK: +44 800 267 666

For additional support numbers please visit www.te.com

DuraSeal Heat-Shrinkable Environmentally Sealed, Nylon Insulated Crimp Terminals and Disconnects (Continued)

Product Characteristics (Typical)

Operating temperature	-55°C to 125°C [-67°F to 257°F]
Shrink ratio	Approximately 2:1
Physical properties	Cut-through resistance: 31.7 kg [70 lb] Wire pullout after crimping and recovery: red: 11.3 kg [25 lb]; blue: 22.7 kg [50 lb]; yellow: 27.2 kg [60 lb] Not flame-retardant No cracking after heat aging for 168 hr at 160°C [320°F]
Chemical properties	Solvent resistance: isopropyl alcohol, trichloroethylene, gasoline, battery acid, diesel fuel, motor oil, antifreeze, brake fluid, 5% salt water
Electrical properties	Dielectric strength: 1000 V Insulation resistance: 10 megohms

Specifications/Approvals

Series	Agency	TE
B-106	UL and CUL 91J4, File E87681 Lloyd's listed, File 65 247 HH 02-93 UL and CUL E157833 (B-106-3XXX/B-106-4XXX)	RB-108

Installation

1. Select appropriate size. For terminal and disconnect terminations, strip wire 6.5 mm (1/4 inch).

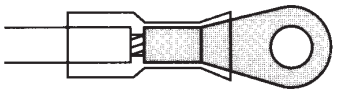

2. Crimp using AD-1522 crimp tool for preinsulated crimps.

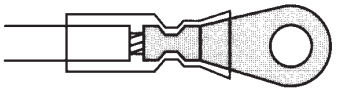

3. Heat terminal or disconnect with heat gun until tubing recovers and adhesive flows. Avoid heating ring or fork metallic parts.

For proper installation of these devices, the correct crimp tool and heating tool with reflector attachment must be used. The AD-1522 crimp tool and HL1910E/HL2010E heating tools are recommended. You will find ordering information for these tools in Section 10. Refer to TE installation procedure RPIP-684-00 for detailed instructions.

Dimensions are shown for reference purposes only. Specifications subject to change.

Dimensions are in millimeters unless otherwise specified.

USA: +1 800 522 6752
Asia Pacific: +86 0 400 820 6015
UK: +44 800 267 666

For additional support numbers please visit www.te.com

SolderGrip Self-Fixturing Insulated Terminals

Product Facts

- **Transparent insulation sleeve provides encapsulation, inspectability, strain relief, and insulation**
- **Spiral copper coil grips and compresses the conductors for optimum solder connection**
- **Prefluxed solder preform provides a controlled soldering process.**
- **One-piece design for easy installation**
- **Accommodates a wide variety of conductor types, quantities, sizes, and plating types unmatched by any other termination technique**
- **Parts meet the performance requirements of MIL-T-7928G**

Product option

Product Series	Environmental Protection
SGRT	Splashproof (not RoHS compliant)

Applications

Used for terminating multiple wires to terminals.

Product Selection Process

1. Determine the wire combination (number of wires and size) of the wire bundle you wish to terminate.
2. Use Table C to select the correct terminal for AWG wire combination.* Example: For connecting a bundle with one 12 AWG wire (1 #12) and two 18 AWG wires (+ 2 #18) to a terminal, you need an SGRT-4-XX terminal.
3. Determine the correct stud size.
4. Select the correct part number from Table A for that stud size in the terminal series and size you selected in Step 2. Example: If the stud size is 1/4, select part number SGRT-4-06.
5. Verify that the wire bundle (with wire insulation) does not exceed the maximum diameter allowed for the part you selected. Simply check the bundle's diameter against the maximum diameter that Table A lists for that part.
6. Verify that the total amperage to be applied does not exceed the maximum amp rating for the part as specified in Table A.

*If the wire combination is not listed in Table B, use the CMA (mm^2) method of determining wire bundle size (see "CMA/mm^2 Calculation" on page 8-36).

Using Table B, select the smallest size part that will fit your total wire CMA (mm^2) value.

Table A. Part Number Selection

SolderGrip Part No.	Stud Size	Maximum Bundle Diameter†	Maximum Amp Rating	Wire Range (Min.–Max.) CMA [mm^2]	Typical Length
SGRT-1-02	2 [2]	4.1 [.161]	12.5 A	1400–5000 [0.7–2.5]	38 [1 1/2]
SGRT-2-03	3 [6]	5.0 [.195]	15 A	2400–6000 [1.2–3.0]	38 [1 1/2]
SGRT-2-04	4 [8]	—	15 A	2400–6000 [1.2–3.0]	38 [1 1/2]
SGRT-2-05	5 [10]	—	15 A	2400–6000 [1.2–3.0]	38 [1 1/2]
SGRT-2-06	6 [1/4]	—	15 A	2400–6000 [1.2–3.0]	38 [1 1/2]
SGRT-3-06	6 [1/4]	6.5 [.255]	33 A	5000–13,200 [2.5–6.6]	44.5 [1 3/4]
SGRT-3-08	8 [5/16]	—	33 A	5000–13,200 [2.5–6.6]	51.0 [2]
SGRT-4-06	6 [1/4]	9.0 [.355]	56 A	12,000–22,400 [6.0–11.2]	44.5 [1 3/4]
SGRT-4-08	8 [5/16]	—	56 A	12,000–22,400 [6.0–11.2]	51 [2]

†Maximum bundle diameter is measured over wire insulation.

Available in:	
Americas	■
Europe	■
Asia Pacific	■

Catalog 1654025
Revised 3-13

www.te.com

Dimensions are shown for reference purposes only. Specifications subject to change.

Dimensions are in millimeters unless otherwise specified.

USA: +1 800 522 6752
Asia Pacific: +86 0 400 820 6015
UK: +44 800 267 666

For additional support numbers please visit www.te.com

SolderGrip Self-Fixturing Insulated Terminals (Continued)

CMA/mm² Calculation

To calculate the total circular mil or mm² area of the wire bundle to be terminated, follow these steps:

1. Choose either CMA or mm² as your unit of measure for selection purposes and continue to use it for all your selection criteria. (Both measures provide the same results.)
2. In the workspace below, list the CMA or mm² for each conductor in the bundle. (Table B provides the CMA of typical conductors.)
3. Add together the values listed in the workspace below to obtain the total area.
4. Use Table A to select the smallest terminator that will fit the total CMA (mm²).

Wire Number	CMA	mm²
1		
2		
3		
4		
5		
6		
7		
8		
9		
10		
Total		

Solder Grip Part No. _____

CMA/mm² Example

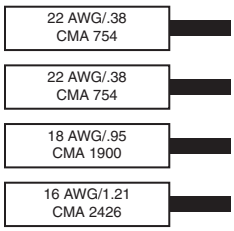

Total CMA = 5834
Total mm² = 2.92
Correct part number (based on CMA of 5834 or mm² of 2.92):
SGRT-2-XX if bundle OD is less than 5.0 mm (0.195 in).

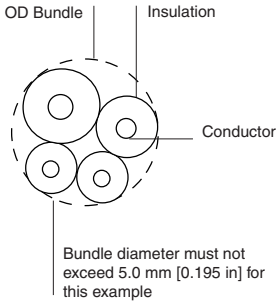

SolderGrip Self-Fixturing Insulated Terminals (Continued)

Table B. CMA of Typical Copper Conductors

Strands	7	19	19	19	19	19	19	19	37
AWG	28	26	24	22	20	18	16	14	12
CMA	177	304	475	754	1216	1900	2426	3831	5874
mm^2	0.09	0.15	0.24	0.38	0.61	0.95	1.21	1.92	2.94

Table C. SolderGrip Wire Combinations (see Table A for Terminal Size [-XX])

Wire Combinations	Part No.	Wire Combinations	Part No.	Wire Combinations	Part No.
1 # 8	SGRT-4-XX	1 # 12 + 1 # 16 + 4 # 18	SGRT-4-XX	1 # 14 + 4 # 20	SGRT-3-XX
1 # 8 + 1 # 16	SGRT-4-XX	1 # 12 + 2 # 16	SGRT-3-XX	1 # 14 + 1 # 18	SGRT-2-XX
2 # 8 + 2 # 16	SGRT-4-XX	1 # 12 + 2 # 16 + 1 # 18	SGRT-3-XX	1 # 14 + 1 # 18 + 1 # 20	SGRT-3-XX
1 # 8 + 1 # 14	SGRT-4-XX	1 # 12 + 2 # 16 + 2 # 18	SGRT-4-XX	1 # 14 + 2 # 18	SGRT-3-XX
1 # 10	SGRT-3-XX	1 # 12 + 3 # 16	SGRT-4-XX	1 # 14 + 3 # 18	SGRT-3-XX
1 # 10 + 1 to 3 # 18	SGRT-3-XX	1 # 12 + 4 # 16	SGRT-4-XX	1 # 14 + 4 # 18	SGRT-3-XX
1 # 10 + 2 # 18	SGRT-3-XX	1 # 12 + 5 # 16	SGRT-4-XX	1 # 14 + 5 # 18	SGRT-4-XX
1 # 10 + 3 # 18	SGRT-4-XX	1 # 12 + 1 # 14 + 1 # 18	SGRT-3-XX	1 # 14 + 1 # 16	SGRT-3-XX
1 # 10 + 1 # 16	SGRT-3-XX	1 # 12 + 1 # 14 + 2 # 18	SGRT-4-XX	1 # 14 + 1 # 16 + 1 # 20	SGRT-3-XX
1 # 10 + 1 # 16 + 1 # 18	SGRT-4-XX	1 # 12 + 1 # 14 + 3 # 18	SGRT-4-XX	1 # 14 + 1 # 16 + 1 # 18	SGRT-3-XX
1 # 10 + 1 # 16 + 2 # 18	SGRT-4-XX	1 # 12 + 1 # 14 + 1 # 16	SGRT-3-XX	1 # 14 + 1 # 16 + 2 # 18	SGRT-3-XX
1 # 10 + 2 # 16	SGRT-4-XX	1 # 12 + 1 # 14 + 2 # 16	SGRT-4-XX	1 # 14 + 1 # 16 + 3 # 18	SGRT-3-XX
1 # 10 + 3 # 16	SGRT-4-XX	1 # 12 + 1 # 14 + 3 # 16	SGRT-4-XX	1 # 14 + 1 # 16 + 4 # 18	SGRT-4-XX
1 # 10 + 4 # 16	SGRT-4-XX	1 # 12 + 1 # 14 + 4 # 16	SGRT-4-XX	1 # 14 + 2 # 16	SGRT-3-XX
1 # 10 + 5 # 16	SGRT-4-XX	1 # 12 + 2 # 14	SGRT-4-XX	1 # 14 + 2 # 16 + 1 # 18	SGRT-3-XX
1 # 10 + 1 # 14	SGRT-3-XX	1 # 12 + 2 # 14 + 1 # 18	SGRT-4-XX	1 # 14 + 2 # 16 + 2 # 18	SGRT-3-XX
1 # 10 + 1 # 14 + 1 # 18	SGRT-4-XX	1 # 12 + 2 # 14 + 1 # 16	SGRT-4-XX	1 # 14 + 2 # 16 + 3 # 18	SGRT-4-XX
1 # 10 + 1 # 14 + 1 # 16	SGRT-4-XX	1 # 12 + 2 # 14 + 2 # 16	SGRT-4-XX	1 # 14 + 3 # 16	SGRT-3-XX
1 # 10 + 1 # 14 + 2 # 16	SGRT-3-XX	1 # 12 + 2 # 14 + 3 # 16	SGRT-4-XX	1 # 14 + 3 # 16 + 1 # 18	SGRT-3-XX
1 # 10 + 1 # 14 + 3 # 16	SGRT-4-XX	1 # 12 + 3 # 14	SGRT-4-XX	1 # 14 + 3 # 16 + 2 # 18	SGRT-4-XX
1 # 10 + 2 # 14	SGRT-4-XX	1 # 12 + 3 # 14 + 1 # 16	SGRT-4-XX	1 # 14 + 4 # 16	SGRT-4-XX
1 # 10 + 3 # 14	SGRT-4-XX	1 # 12 + 4 # 14	SGRT-4-XX	1 # 14 + 4 # 16 + 1 # 18	SGRT-4-XX
1 # 10 + 1 # 12	SGRT-4-XX	2 # 12 + 1 # 18	SGRT-4-XX	1 # 14 + 5 # 16	SGRT-4-XX
1 # 10 + 1 # 12 + 1 # 14	SGRT-4-XX	2 # 12 + 1 # 16	SGRT-4-XX	2 # 14	SGRT-3-XX
1 # 10 + 2 # 12	SGRT-4-XX	2 # 12 + 2 # 16 + 1 # 18	SGRT-4-XX	2 # 14	SGRT-3-XX
2 # 10	SGRT-4-XX	2 # 12 + 3 # 16	SGRT-4-XX	2 # 14	SGRT-3-XX
2 # 10 + 1 # 16	SGRT-4-XX	2 # 12 + 1 # 14 + 1 # 18	SGRT-4-XX	2 # 14	SGRT-3-XX
1 # 12	SGRT-3-XX	2 # 12 + 1 # 14 + 1 # 16	SGRT-4-XX	2 # 14	SGRT-3-XX
1 # 12 + 1 # 18	SGRT-3-XX	2 # 12 + 2 # 14	SGRT-4-XX	2 # 14 + 1 # 16	SGRT-3-XX
1 # 12 + 2 # 18	SGRT-3-XX	3 # 12 + 1 # 18	SGRT-4-XX	2 # 14 + 1 # 16	SGRT-3-XX
1 # 12 + 3 # 18	SGRT-3-XX	3 # 12 + 1 # 16	SGRT-4-XX	2 # 14 + 1 # 16	SGRT-3-XX
1 # 12 + 4 # 18	SGRT-4-XX	3 # 12 + 1 # 14	SGRT-4-XX	2 # 14 + 1 # 16	SGRT-3-XX
1 # 12 + 5 # 18	SGRT-4-XX	1 # 14	SGRT-2-XX	2 # 14 + 2 # 16	SGRT-3-XX
1 # 12 + 1 # 16	SGRT-3-XX	1 # 14 + 1 # 22	SGRT-2-XX	2 # 14 + 2 # 16	SGRT-3-XX
1 # 12 + 1 # 16 + 1 # 18	SGRT-3-XX	1 # 14 + 1 # 20	SGRT-2-XX	2 # 14 + 3 # 16	SGRT-4-XX
1 # 12 + 1 # 16 + 2 # 18	SGRT-3-XX	1 # 14 + 2 # 20	SGRT-3-XX	2 # 14 + 4 # 16	SGRT-4-XX
1 # 12 + 1 # 16 + 3 # 18	SGRT-4-XX	1 # 14 + 3 # 20	SGRT-3-XX	3 # 14	SGRT-3-XX

Dimensions are shown for reference purposes only. Specifications subject to change.

Dimensions are in millimeters unless otherwise specified.

USA: +1 800 522 6752
Asia Pacific: +86 0 400 820 6015
UK: +44 800 267 666

For additional support numbers please visit www.te.com

SolderGrip Self-Fixturing Insulated Terminals (Continued)

Table C. SolderGrip Wire Combinations (see Table A for Terminal Size [-XX])
(Continued)

Wire Combinations	Part No.	Wire Combinations	Part No.	Wire Combinations	Part No.
3 # 14 + 1 # 16	SGRT-4-XX	2 # 16 + 4 # 20	SGRT-3-XX	1 # 18 + 1 # 20 + 2 # 22	SGRT-2-XX
3 # 14 + 2 # 16	SGRT-4-XX	2 # 16 + 1 # 18	SGRT-3-XX	1 # 18 + 2 # 20	SGRT-2-XX
3 # 14 + 3 # 16	SGRT-4-XX	2 # 16 + 1 # 18 + 1 # 20	SGRT-3-XX	1 # 18 + 3 # 20	SGRT-2-XX
4 # 14	SGRT-4-XX	2 # 16 + 1 # 18 + 2 # 20	SGRT-3-XX	1 # 18 + 4 # 20	SGRT-3-XX
4 # 14 + 1 # 16	SGRT-4-XX	2 # 16 + 1 # 18 + 3 # 20	SGRT-3-XX	1 # 18 + 5 # 20	SGRT-3-XX
4 # 14 + 2 # 16	SGRT-4-XX	2 # 16 + 2 # 18	SGRT-3-XX	2 # 18	SGRT-2-XX
5 # 14	SGRT-4-XX	2 # 16 + 2 # 18 + 1 # 20	SGRT-3-XX	2 # 18 + 1 # 22	SGRT-2-XX
5 # 14 + 1 # 16	SGRT-4-XX	2 # 16 + 2 # 18 + 2 # 20	SGRT-3-XX	2 # 18 + 1 # 20	SGRT-2-XX
1 # 16	SGRT-2-XX	2 # 16 + 3 # 18	SGRT-3-XX	2 # 18 + 2 # 20	SGRT-3-XX
1 # 16 + 1 # 22	SGRT-2-XX	2 # 16 + 3 # 18 + 1 # 20	SGRT-3-XX	2 # 18 + 3 # 20	SGRT-3-XX
1 # 16 + 2 # 22	SGRT-2-XX	2 # 16 + 4 # 18	SGRT-3-XX	2 # 18 + 4 # 20	SGRT-3-XX
1 # 16 + 3 # 22	SGRT-2-XX	3 # 16	SGRT-3-XX	3 # 18	SGRT-2-XX
1 # 16 + 1 # 20	SGRT-2-XX	3 # 16 + 1 # 20	SGRT-3-XX	3 # 18 + 1 # 20	SGRT-3-XX
1 # 16 + 1 # 20 + 1 # 22	SGRT-2-XX	3 # 16 + 2 # 20	SGRT-3-XX	3 # 18 + 2 # 20	SGRT-3-XX
1 # 16 + 2 # 20	SGRT-2-XX	3 # 16 + 3 # 20	SGRT-3-XX	3 # 18 + 3 # 20	SGRT-3-XX
1 # 16 + 3 # 20	SGRT-3-XX	3 # 16 + 1 # 18	SGRT-3-XX	4 # 18	SGRT-3-XX
1 # 16 + 4 # 20	SGRT-3-XX	3 # 16 + 1 # 18 + 1 # 20	SGRT-3-XX	4 # 18 + 1 # 20	SGRT-3-XX
1 # 16 + 5 # 20	SGRT-3-XX	3 # 16 + 1 # 18 + 2 # 20	SGRT-3-XX	4 # 18 + 2 # 20	SGRT-3-XX
1 # 16 + 1 # 18	SGRT-2-XX	3 # 16 + 2 # 18	SGRT-3-XX	5 # 18	SGRT-3-XX
1 # 16 + 1 # 18 + 1 # 20	SGRT-2-XX	3 # 16 + 2 # 18 + 1 # 20	SGRT-3-XX	5 # 18 + 1 # 20	SGRT-3-XX
1 # 16 + 1 # 18 + 2 # 20	SGRT-3-XX	3 # 16 + 3 # 18	SGRT-3-XX	6 # 18	SGRT-3-XX
1 # 16 + 1 # 18 + 3 # 20	SGRT-3-XX	4 # 16	SGRT-3-XX	1 # 20 + 2 # 22	SGRT-2-XX
1 # 16 + 1 # 18 + 4 # 20	SGRT-3-XX	4 # 16 + 1 # 20	SGRT-3-XX	1 # 20 + 3 # 22	SGRT-2-XX
1 # 16 + 2 # 18	SGRT-3-XX	4 # 16 + 2 # 20	SGRT-3-XX	1 # 20 + 4 # 22	SGRT-2-XX
1 # 16 + 2 # 18 + 1 # 20	SGRT-3-XX	4 # 16 + 1 # 18	SGRT-3-XX	2 # 20	SGRT-2-XX
1 # 16 + 2 # 18 + 2 # 20	SGRT-3-XX	4 # 16 + 1 # 18 + 1 # 20	SGRT-3-XX	2 # 20 + 1 # 22	SGRT-2-XX
1 # 16 + 2 # 18 + 3 # 20	SGRT-3-XX	4 # 16 + 2 # 18	SGRT-4-XX	2 # 20 + 2 # 22	SGRT-2-XX
1 # 16 + 3 # 18	SGRT-3-XX	5 # 16	SGRT-3-XX	2 # 20 + 3 # 22	SGRT-2-XX
1 # 16 + 3 # 18 + 1 # 20	SGRT-3-XX	5 # 16 + 1 # 20	SGRT-4-XX	3 # 20	SGRT-2-XX
1 # 16 + 3 # 18 + 2 # 20	SGRT-3-XX	5 # 16 + 1 # 18	SGRT-4-XX	3 # 20 + 1 # 22	SGRT-2-XX
1 # 16 + 4 # 18	SGRT-3-XX	6 # 16	SGRT-4-XX	4 # 20	SGRT-2-XX
1 # 16 + 4 # 18 + 1 # 20	SGRT-3-XX	1 # 18 + 1 # 22	SGRT-2-XX	5 # 20	SGRT-3-XX
1 # 16 + 5 # 18	SGRT-3-XX	1 # 18 + 2 # 22	SGRT-2-XX	6 # 20	SGRT-3-XX
2 # 16	SGRT-2-XX	1 # 18 + 3 # 22	SGRT-2-XX	4 # 22	SGRT-2-XX
2 # 16 + 1 # 20	SGRT-3-XX	1 # 18 + 1 # 20	SGRT-2-XX	5 # 22	SGRT-2-XX
2 # 16 + 2 # 20	SGRT-3-XX	1 # 18 + 1 # 20 + 1 # 22	SGRT-2-XX	6 # 22	SGRT-2-XX
2 # 16 + 3 # 20	SGRT-3-XX	—	—	—	—

Catalog 1654025
Revised 3-13

www.te.com

Dimensions are shown for reference purposes only. Specifications subject to change.

Dimensions are in millimeters unless otherwise specified.

USA: +1 800 522 6752
Asia Pacific: +86 0 400 820 6015
UK: +44 800 267 666

For additional support numbers please visit www.te.com

SolderGrip Self-Fixturing Insulated Terminals (Continued)

Installation

The SolderGrip product is pushed onto the conductors with a twisting motion. With the product in place, installation can be completed with the proper selection and use of heating tools and reflectors.

Either of the following TE heating tools is recommended:

- HL1901E/HL2010E
- CV-1981

Refer to TE installation procedure RPIP-820-01 for detailed instructions and recommended reflector attachments.

You will find ordering information for these tools in Section 10.

Product Characteristics

Material	
Insulation	Radiation-crosslinked, heat-shrinkable polyvinylidene fluoride (Kynar®)
Solder and flux	Sn60 Pb40 with RA flux
Typical Performance	
Tensile strength	Exceeds strength of individual wires
Temperature rating	-55°C to +150°C [-67°F to +302°F]
Voltage Drop	Not to exceed that of equivalent length of wire by more than 1 mV
Dielectric Withstanding Voltage	Current leakage less than 2 mA (1.5 kV)

Kynar is a trademark of Arkema, Inc.

Catalog 1654025
Revised 3-13

www.te.com

Dimensions are shown for reference purposes only. Specifications subject to change.

Dimensions are in millimeters unless otherwise specified.

USA: +1 800 522 6752
Asia Pacific: +86 0 400 820 6015
UK: +44 800 267 666

For additional support numbers please visit www.te.com

Introduction

TE SolderSleeve terminators offer easy, one-step solutions for wire connections to pins, posts, and tabs and for mass wire terminations.

Designed for applications with temperatures up to 150°C [302°F], the products in this section include SolderSleeve discrete wire terminators, which are heat-shrinkable thermoplastic sleeves containing a precisely engineered fluxed solder preform.

SolderSleeve terminators are also available on carrier tape, spaced precisely to match connector terminal spacing, enabling termination of an entire row of wires at one time.

SolderSleeve wire-to-pin, wire-to-post, and wire-to-tab terminators, like all TE termination products, provide reliability and economical installation for greater productivity. They can be supplied either in bulk or on carrier tape.

Dimensions are shown for reference purposes only. Specifications subject to change.

Dimensions are in millimeters unless otherwise specified.

USA: +1 800 522 6752
Asia Pacific: +86 0 400 820 6015
UK: +44 800 267 666

For additional support numbers please visit www.te.com

SolderSleeve Discrete Wire Terminators

Product Facts

- **Transparent polyvinylidene fluoride or polyolefin insulation sleeve provides encapsulation, inspectability, strain relief, and insulation**
- **Prefluxed solder preform offers a controlled soldering process**
- **One-piece design means easy installation and low installed cost**
- **Optional tape carrier provides convenience and ease of installation**
- **UL and CUL Recognized**

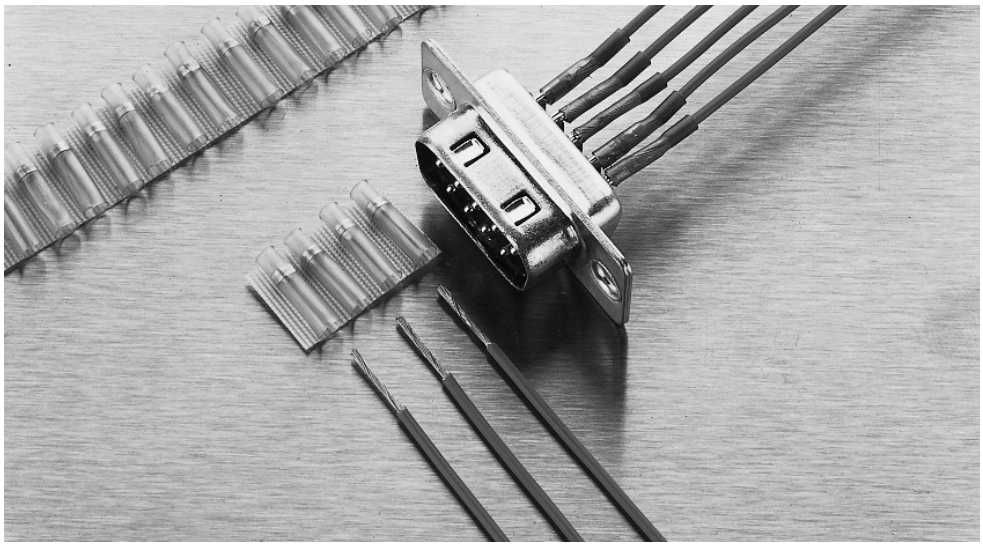

Applications

Used for terminating wires to component terminals, such as motor tabs, connector pins, and switch terminals.

Product selection process

1. Determine the application operating temperature.
2. From the Product Options table on the next page, select the product series appropriate for the application, based on the temperature required.
3. Determine your component connection point type (pin, post, or tab) and dimensions.
4. Determine your wire gauge.
5. Optional: Select tape carrier center-to-center spacing (D-71X series only). This should match center spacing of component terminals.
6. Select part number from the appropriate table:
   - For B-155 and CWT series (applications with low-temperature wires—below 125°C [257°F]), use Table A.
   - For D-129/141/71X series (applications with wires rated higher than 125°C [257°F]), use Table B.

Installation

For proper installation of these devices, the correct heating tool and reflector attachment must be used. Either of the following TE heating tools is recommended:

- HL1901E/HL2010E
- AA-400 Super Heater

Refer to TE installation procedure RCPS-200-12 (for D-129, D-141, D-71X) or RPIP-824-00 (for B-155 and CWT) for detailed instructions and recommended reflector attachment.

You will find ordering information for these tools see section 10.

Available in:	
Americas	■
Europe	■
Asia Pacific	■

Catalog 1654025
Revised 3-13

www.te.com

Dimensions are shown for reference purposes only. Specifications subject to change.

Dimensions are in millimeters unless otherwise specified.

USA: +1 800 522 6752
Asia Pacific: +86 0 400 820 6015
UK: +44 800 267 666

For additional support numbers please visit www.te.com

SolderSleeve Discrete Wire Terminators (Continued)

Product Options

Product Series	Max. Operating Temperature	Min. Wire Temperature Rating
B-155, CWT	125°C [257°F]	85°C [185°F]
D-129, D-141, D-71X	150°C [302°F]	125°C [257°F]

Note: Cadmium-free option (B-152 series) is available for operating temperature of 125˚C [257˚F]. Consult TE for details.

Table A. B-155 Series (125°C [257°F] rated)

Connection-point Type and Size	Terminal Dimensions	Wire AWG/mm²	Part No.
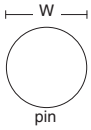	W = up to 0.63 [.025]	24 [0.24] 20 [0.61]	B-155-1501 B-155-1502
	W = 0.63 [.025] to 0.89 [0.035]	24 [0.24] 22 [0.38] 20 [0.61]	B-155-1501 B-155-1502 B-155-1503
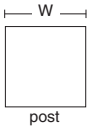	W = 0.89 [0.035] to 1.14 [.045]	24–22 [0.24–0.38] 20–18 [0.61–0.95]	B-155-1502 B-155-1503
	W = 1.14 [.045] to 1.52 [.060]	24–22 [0.24–0.38] 20–18 [0.61–0.95]	B-155-1503 B-155-1504
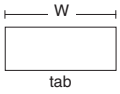	W = up to1.52 [.060]	24–20 [0.24–0.61]	B-155-1501
	W = 1.27 [.050] to 2.28 [.090]	24-18 [0.24–0.95]	B-155-1502
	W = 1.77 [.070] to 2.79 [.110]	24-18 [0.24–0.95]	B-155-1503
	W = 2.54 [.100] to 3.80 [.150]	24-18 [0.24–0.95]	B-155-1504
	W = 2.28 [.090] to 4.70 [.187]	22-16 [0.38–1.21]	B-155-1505

Dimensions are shown for reference purposes only. Specifications subject to change.

Dimensions are in millimeters unless otherwise specified.

USA: +1 800 522 6752
Asia Pacific: +86 0 400 820 6015
UK: +44 800 267 666

For additional support numbers please visit www.te.com

SolderSleeve Discrete Wire Terminators (Continued)

Table B. D-129/141/71X Series (up to 150°C [302°F] rated)

Connection-point Type and Size

Terminal Dimensions		Wire AWG	Wire mm²	Tape Carrier Spacing of Sleeves (Center-to-Center) None	1.27 [0.050]	2.54 [0.100]	3.17 [0.125]	4.0 [0.156]
W, pin	W = up to 0.61 [.024]	30–26	[0.05–0.15]	D-141-30	D-713-03	—	—	—
		24–22	[0.24–0.38]	D-141-07	—	D-711-00	—	—
	W = 0.63 [.025] to 0.81 [.032]	20	[0.61]	D-141-31	—	D-711-04	D-711-07	D-711-08
W, post	W = 0.76 [.030] to 1.27 [.050]	24–20	[0.24–0.61]	D-141-56	—	—	—	—
	W = up to 1.52 [.060]	24–20	[0.24–0.61]	D-129-05	—	D-714-01	—	—
W, tab	W = 1.27 [.050] to 2.28 [.090]	24–20	[0.24–0.61]	D-129-03	—	—	—	D-714-00
	W = 2.28 [.090] to 3.55 [.140]	24–20	[0.24–0.61]	D-129-0043	—	—	—	—

For Fine Wire Terminations 0.15 mm² (26 AWG) and Smaller*

Part No.*	Inside Diameter As Supplied**	Fully Recovered†	Length††
D-110-0062	1.0 [0.040]	0.6 [0.025]	16.0 [0.630]
D-110-0217	1.0 [0.040]	0.6 [0.025]	9.0 [0.360]
D-141-13	0.75 x 1.65 [0.030 X 0.065]	0.75 [0.030]	4.7 [0.185]
D-141-22	0.75 x 1.65 [0.030 X 0.065]	0.75 [0.030]	6.0 [0.240]
D-141-30	0.75 x 1.65 [0.030 X 0.065]	0.75 [0.030]	9.5 [0.375]

Note: Micro SolderSleeve terminators are used for attaching leads smaller than 26 AWG (0.15 mm²) to terminals less than 0.6 [.025] wide.

*The D-110 series sleeves are primarily for single wire terminations and do not have a wire stop. The D-141 series will accept either one or two wires; the parts have a built-in wire stop that will locate the wire approximately 0.76 [0.03] from bottom of terminal.

**Minimum. Wire insulation must be smaller than this. When using the D-141 parts for two-wire terminations, the combined wire insulation diameters must be less than 1.5 [.060].

†Maximum. The combination of conductor diameter and terminal width and the wire insulation must be greater than this.

††The terminal length should be at least 1.2 [0.05] shorter than this. The wire strip length must be adjusted so that, when terminated, the exposed conductor is covered by the sleeve.

Dimensions are shown for reference purposes only. Specifications subject to change.

Dimensions are in millimeters unless otherwise specified.

USA: +1 800 522 6752
Asia Pacific: +86 0 400 820 6015
UK: +44 800 267 666

For additional support numbers please visit www.te.com

SolderSleeve Discrete Wire Terminators (Continued)

Product Characteristics

Material		
Insulation [D-129, D-141, D-71X]	Radiation-crosslinked, heat-shrinkable polyvinylidene fluoride	
Insulation [B-155, CWT]	Radiation-crosslinked, heat-shrinkable polyolefin	
Solder and flux [D-129, D-141, D-71X]	Solder: Sn63 Pb37	Flux: ROL1 per ANSI-J-004 [RMA flux]
Solder and flux [B-155]	Solder: Sn42Bi58	Flux: ROM1 per ANSI-J-004 [RA flux]
Solder and flux [CWT]	Solder: Sn50 Pb32 Cd 18	Flux: ROM1 per ANSI-J-004 [RA flux]
Typical Performance		
Voltage drop	2.0 mV	
Tensile strength	Exceeds strength of conductor	
Dielectric strength	2.0 kV	
Temperature rating [B-155, CWT]	-55°C to 125°C [-67°F to 257°F]	
Temperature rating [D-129, D-141, D-71X]	-55°C to 150°C [-67°F to 302°F]	
Insulation resistance	1000 megohms	

Specifications/Approvals

Series	Agency	TE
B-155	RoHS	RT-1404
CWT	UL and CUL E87681	D-5023
D-129, D-141	UL and CUL E87681	RT-1404

Introduction

TE SolderSleeve shield grounding terminators provide an environmentally sealed, insulated, and encapsulated solder connection for a variety of applications. SolderSleeve terminators are available in many styles.

Designed for a wide variety of temperature applications ranging from -65°C to 200°C [-85°F to 392°F], the products in this section include:

- B-155-X and CWT-X SolderSleeve terminators, designed for low-temperature cables with operating temperatures up to 125°C [257°F] and suitable for most commercial environments.
- MIL-S-83519 SolderSleeve terminators, which are immersion resistant and available with or without a preinstalled ground lead.
- SO Series SolderSleeve terminators, which also are immersion resistant and feature the TE BiAlloy temperature indication system.
- S200 Shield terminators are offered in various sizes and ground lead configurations.

All SolderSleeve products are reliable, versatile, and easy to install, resulting in lower installed costs.

Catalog 1654025
Revised 3-13

www.te.com

Dimensions are shown for reference purposes only. Specifications subject to change.

Dimensions are in millimeters unless otherwise specified.

USA: +1 800 522 6752
Asia Pacific: +86 0 400 820 6015
UK: +44 800 267 666

For additional support numbers please visit www.te.com

SolderSleeve Shield Terminators

Product Facts

- **Transparent insulation sleeve provides encapsulation, inspectability, strain relief, and insulation**
- **Prefluxed solder preform provides a controlled soldering process**
- **One-piece design offers easy installation and lower installed cost**
- **Optional preinstalled ground leads provide convenience and ease of installation**

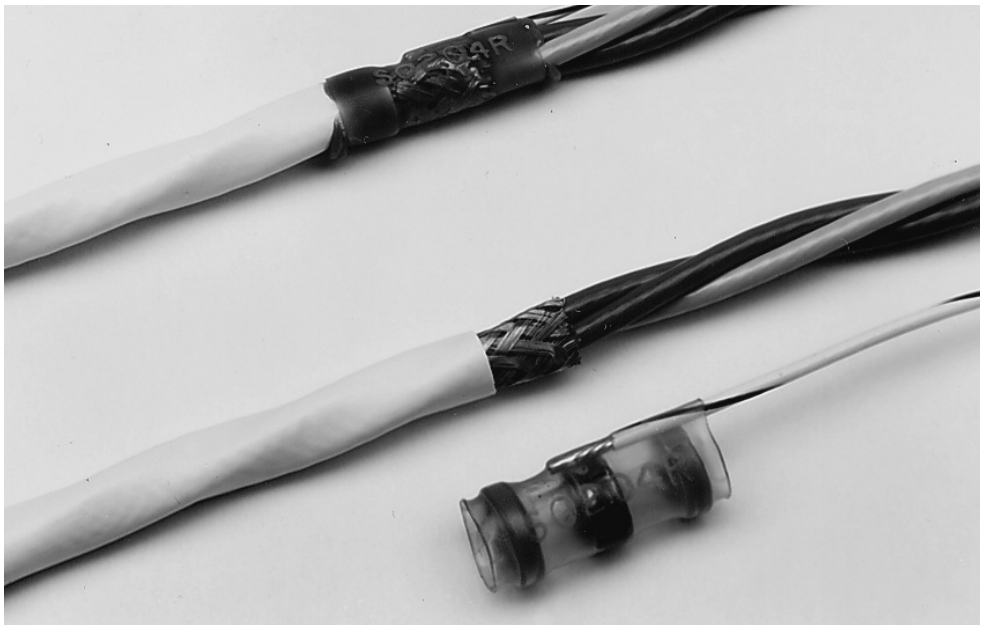

Applications

Used for shield-to-ground termination.

Product Selection Process

1. Select product series from the Product Options table below.
2. Determine cable dimensions.
3. Optional: Select preinstalled wire lead type (see Table G on page 8-49 for type descriptions).
4. Select part number (use the selection table indicated for your product series in the Product Options table below).
5. Refer to Table H on page 8-49 for cross-reference information.

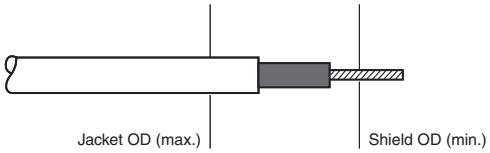

Product Options (Refer to Table G on Page 8-49 for Additional Information)

Product Series	System Oper. Temperature (Max.)	Used on Cables Rated (Min.)	Environmental Protection	Solder Alloy	Flux Type	Insulation Material	Part No. Selection Table
B-155	125°C [257°F]	85°C [185°F]	Splash resistant	Bi58	PA	Polyolefin	A
CWT	125°C [257°F]	85°C [185°F]	Splash resistant	Cd18	RA	Polyolefin	A
SO63*	150°C [302°F]	125°C [257°F]	Immersion resistant	Sn63	RMA	Polyvinylidene fluoride	B
S01/S02**, S03	150°C [302°F]	125°C [257°F]	Immersion resistant	Sn63	RMA	Polyvinylidene fluoride	C, D
SO96***	175°C [347°F]	150°C [302°F]	Immersion resistant	Sn96	RA	Polyvinylidene fluoride	E
SO175****	175˚C [347°F]	150˚C [302°F]	Immersion resistant	Sn96	RA	Polyvinylidene fluoride	F
S200****	200°C [392°F]	150˚C [302°F]	Immersion resistant	Sn96	RA	Fluoropolymer	G

*Meets performance requirements of SAE-AS83519 (formerly MIL-S-83519) and NAS 1747, supplied with BiAlloy temperature indicator.
**Qualified to SAE-AS83519 (formerly MIL-S-83519), supplied with thermochromic temperature indicator.
***Meets performance requirements of SAE-AS83519 (formerly MIL-S-83519) and NAS 1747, supplied with thermochromic temperature indicator.
****Meets performance requirements of SAE-AS83519 (formerly MIL-S-83519), supplied with BiAlloy temperature indicator.
Note: Cadmium-free option (B-152 series) is available for operating temperature of 125˚C [257˚F]. Consult TE for details.

Available in:	
Americas	■
Europe	■
Asia Pacific	■

Dimensions are shown for reference purposes only. Specifications subject to change.

Dimensions are in millimeters unless otherwise specified.

USA: +1 800 522 6752
Asia Pacific: +86 0 400 820 6015
UK: +44 800 267 666

For additional support numbers please visit www.te.com

SolderSleeve Shield Terminators (Continued)

Table A. B-155 Series (125°C [257°F] rated)

Cable OD		Part Nos.	
Jacket OD Max.	Shield OD Min.	No Preinstalled Lead	With Preinstalled Lead (22AWG/0.38 mm² green)
1.7 [.065]	0.9 [.035]	B-155-3801	—
1.95 [.075]	1.1 [.043]	B-155-3802	—
2.7 [.105]	1.5 [.059]	B-155-3	B-155-03-35-22-5
4.5 [.180]	2.0 [.079]	B-155-5	B-155-05-35-22-5
6.0 [.235]	3.3 [.130]	B-155-6	B-155-06-35-22-5
7.0 [.275]	3.3 [.130]	B-155-7	B-155-07-35-22-5
8.7 [.340]	4.5 [.177]	B-155-9	B-155-09-35-22-5
10.7 [.420]	4.5 [.177]	B-155-11	B-155-11-35-22-5
13.0 [.510]	7.0 [.276]	B-155-13	B-155-13-35-22-5

*See Table G on page 8-49 for lead description.
Note: The B-155 series is suitable for applications using low-temperature wires (typically rated at 85°C [185°F] to 125°C [257°F]) with bare copper or tin plating.

Table B. SO63 Series

BiAlloy Temperature Indication System

This system greatly enhances the reliability and repeatability of SO63 series terminators while reducing installed cost. The heat-shrinkable thermoplastic sleeve contains a precisely engineered, fluxed solder band that is visible through the sleeve. The band provides exactly the amount of solder and flux required to terminate the ground lead to the cable shield. Encircling the band is a small temperature indicator ring. This ring melts only when the surfaces to be joined have reached the correct soldering temperature, thus ensuring a properly soldered connection. Process control is built into each sleeve.

Cable OD		Part Nos.						
			Preinstalled Lead Option*				Braid Strap	
Jacket OD Max.	Shield OD Min.	No Preinstalled Lead	20 AWG	22 AWG	24 AWG	26 AWG	Nickel Plated	Tin Plated
1.95 [0.075]	0.90 [.035]	SO63-1-00	SO63-1-55-20-90	SO63-1-55-22-90	SO63-1-55-24-90	SO63-1-55-26-90	SO63-1-01	SO63-1-9030
2.7 [0.105]	1.40 [.055]	SO63-2-00	SO63-2-55-20-90	SO63-2-55-22-90	SO63-2-55-24-90	SO63-2-55-26-90	SO63-2-01	SO63-2-9030
4.3 [0.170]	2.15 [.085]	SO63-3-00	SO63-3-55-20-90	SO63-3-55-22-90	SO63-3-55-24-90	SO63-3-55-26-90	SO63-3-01	SO63-3-9030
6.0 [0.235]	3.30 [.130]	SO63-4-00	SO63-4-55-20-90	SO63-4-55-22-90	SO63-4-55-24-90	SO63-4-55-26-90	SO63-4-01	SO63-4-9030
7.0 [0.275]	4.30 [.170]	SO63-5-00	SO63-5-55-20-90	SO63-5-55-22-90	SO63-5-55-24-90	SO63-5-55-26-90	SO63-5-01	SO63-5-9030

*See Table G on page 8-49 for lead description. Color of wire lead is denoted by the last two digits of the part number as follows:
90 = White with a black stripe 9 = White 0 = Black 6 = Blue (24 AWG only) 5 = Green (20, 22, 24 AWG)
The SO63 series is immersion resistant, features the TE BiAlloy temperature indication system, and meets the performance requirements of SAE-AS83519 (formerly MIL-S-83519) .

Dimensions are shown for reference purposes only. Specifications subject to change.
Dimensions are in millimeters unless otherwise specified.
USA: +1 800 522 6752
Asia Pacific: +86 0 400 820 6015
UK: +44 800 267 666
For additional support numbers please visit www.te.com

SolderSleeve Shield Terminators (Continued)

Table C. S01/S02 M83519 Series

Thermochromic Temperature Indicator

The M83519 (S01 and S02) series terminators contain a colored thermochromic temperature indicator that exhibits a distinct color change when surfaces have reached wetting temperature. This color change gives both manufacturing and Quality Control an aid in the inspection of the completed termination.

Cable OD		Part No. (MIL Part Number and TE Part No.) by Lead Option					
		No Preinstalled Lead		Preinstalled Lead Option*			
				20 AWG		22 AWG	
Jacket OD Max	Shield OD Min	MIL	TE	MIL	TE	MIL	TE
1.95 [0.075]	0.9 [.035]	M83519/1-1	S01-01-R	M83519/2-1	S02-01-R	M83519/2-6	S02-06-R
2.7[0.105]	1.40 [.055]	M83519/1-2	S01-02-R	M83519/2-2	S02-02-R	M83519/2-7	S02-07-R
4.3 [0.170]	2.15 [.085]	M83519/1-3	S01-03-R	M83519/2-3	S02-03-R	M83519/2-8	S02-08-R
6.0 [0.235]	3.30 [.130]	M83519/1-4	S01-04-R	M83519/2-4	S02-04-R	M83519/2-9	S02-09-R
7.0 [0.275]	4.30 [.170]	M83519/1-5	S01-05-R	M83519/2-5	S02-05-R	M83519/2-10	S02-10-R
Jacket OD Max.	Shield OD Min.			Preinstalled Lead Option*			
				24 AWG		26 AWG	
1.95 [0.075]	0.9 [.035]			M83519/2-11	S02-11-R	M83519/2-16	S02-16-R
2.7 [0.105]	1.40 [.055]			M83519/2-12	S02-12-R	M83519/2-17	S02-17-R
4.3[0.170]	2.15 [.085]			M83519/2-13	S02-13-R	M83519/2-18	S02-18-R
6.0 [0.235]	3.30 [.130]			M83519/2-14	S02-14-R	M83519/2-19	S02-19-R
7.0 [0.275]	4.30 [.170]			M83519/2-15	S02-15-R	M83519/2-20	S02-20-R

*See Table G for lead description.
M83519 is the qualified product listed in SAE-AS83519 (formerly MIL-S-83519) . The series features a thermochromic temperature indicator to assist in termination and inspection. The part number is permanently marked on the sleeve.

Table D. S03 Series

Thermochromic Temperature Indicator

The S03 series terminators contain a colored thermochromic temperature indicator that exhibits a distinct color change when surfaces have reached wetting temperature. This color change gives both Manufacturing and Quality Control an aid in the inspection of the completed termination.

Cable OD		Part No.	
		Preinstalled Lead Option*	
Jacket OD Max.	Shield OD Min.	Tin plated Braid Strap	Nickel plated Braid Strap
1.95 [0.075]	0.9 [.035]	S03-01-R	S03-06-R
2.7 [0.105]	1.40 [.055]	S03-02-R	S03-07-R
4.3 [0.170]	2.15 [.085]	S03-03-R	S03-08-R
6.0 [0.235]	3.30 [.130]	S03-04-R	S03-09-R
7.0 [0.275]	4.30 [.170]	S03-05-R	S03-10-R

*See Table G for lead description.

Dimensions are shown for reference purposes only. Specifications subject to change.

Dimensions are in millimeters unless otherwise specified.

USA: +1 800 522 6752
Asia Pacific: +86 0 400 820 6015
UK: +44 800 267 666

For additional support numbers please visit www.te.com

SolderSleeve Shield Terminators (Continued)

Table E. SO96 Series (175°C [347°F] rated)

Thermochromic Temperature Indicator

The SO96 series terminators contain a colored thermochromic temperature indicator that exhibits a distinct color change when surfaces have reached wetting temperature. This color change gives both manufacturing and Quality Control an aid in the inspection of the completed termination.

Cable OD		Part No.		
Jacket OD Max.	Shield OD Min.	No Preinstalled Lead	Preinstalled Lead Option*	
			22 AWG	Braid Strap
1.95 [0.075]	0.9 [.035]	SO96-1-00	SO96-1-55-22-90	SO96-1-01
2.7 [0.105]	1.40 [.055]	SO96-2-00	SO96-2-55-22-90	SO96-2-01
4.3 [0.170]	2.15 [.085]	SO96-3-00	SO96-3-55-22-90	SO96-3-01
6.0 [0.235]	3.30 [.130]	SO96-4-00	SO96-4-55-22-90	SO96-4-01
7.0 [0.275]	4.30 [.170]	SO96-5-00	SO96-5-55-22-90	SO96-5-01

*See Table G for lead description.
The SO96 series is designed for high-temperature applications with operating temperature requirements up to 200°C [392°F]. This series features a thermochromic temperature indicator and meets performance requirements of SAE-AS83519 (formerly MIL-S-83519) . The solder is Sn96 with RA flux compatible with nickel-plated shields.

Table F. SO175 Series (175°C [347°F] rated)

BiAlloy Temperature Indication System

This system greatly enhances the reliability and repeatability of SO175 series terminators while reducing installed cost. The temperature indicator ring, encircling the solder preform, melts to indicate the very minimum amount of heat.

Cable OD		Part No.		
Jacket OD Max.	Shield OD Min.	No Preinstalled Lead	Preinstalled Lead Option*	
			22 AWG	Braid Strap
1.95 [0.075]	0.90 [0.035]	SO175-1-00	SO175-1-55-22-90	SO175-1-01
2.7 [0.105]	1.40 [0.055]	SO175-2-00	SO175-2-55-22-90	SO175-2-01
4.3 [0.170]	2.15 [0.085]	SO175-3-00	SO175-3-55-22-90	SO175-3-01
6.0 [0.235]	3.30 [0.130]	SO175-4-00	SO175-4-55-22-90	SO175-4-01
7.0 [0.275]	4.30 [0.170]	SO175-5-00	SO175-5-55-22-90	SO175-5-01

*See Table H for lead description.

Table G. S200 Series (200°C [392°F] rated)

BiAlloy Temperature Indication System

This system greatly enhances the reliability and repeatability of S200 series terminators while reducing installed cost. The temperature indicator ring, encircling the solder preform, melts to indicate the very minimum amount of heat.

Cable OD		Part No.		
Jacket OD Max.	Shield OD Min.	No Preinstalled Lead	Preinstalled Lead Option*	
			22 AWG	Braid Strap
1.95 [0.075]	0.90 [0.035]	S200-1-00	S200-1-WI-22-9	S200-1-01
2.7 [0.105]	1.40 [0.055]	S200-2-00	S200-2-WI-22-9	S200-2-01
4.3 [0.170]	2.15 [0.085]	S200-3-00	S200-3-WI-22-9	S200-3-01
6.0 [0.235]	3.30 [0.130]	S200-4-00	S200-4-WI-22-9	S200-4-01
7.0 [0.275]	4.30 [0.170]	S200-5-00	S200-5-WI-22-9	S200-5-01

*See Table H for lead description.

Table H. Preinstalled Lead Description

Series	Lead Type	Remarks	Plating	Stranding	Min. Length
S200	M22759/91	MIL-W-22759/91	Silver	Stranded	150 (6.00)
M83519, SO63	55A0111	MIL-W-22759/32	Tin	Stranded	150 [6.00]
SO96, SO175	55A0813	MIL-W-22759/41	Nickel	Stranded	150 [6.00]
SO63, SO96, S03	Braid strap	Uninsulated	Nickel	40 x 38 AWG	150 [6.00]
B-155	XL polyethylene	RoHS	Tin	Stranded (W2)	150 [6.00]
CWT	XL polyethylene	UL Listed	Tin	Stranded (W1)	150 [6.00]
SO63, S03	Braid Strap	Uninsulated	Tin	Stranded	150 [6.00]

Catalog 1654025
Revised 3-13
www.te.com

Dimensions are shown for reference purposes only. Specifications subject to change.
Dimensions are in millimeters unless otherwise specified.
USA: +1 800 522 6752
Asia Pacific: +86 0 400 820 6015
UK: +44 800 267 666
For additional support numbers please visit www.te.com

SolderSleeve Shield Terminators (Continued)

Product Characteristics

Material		
Insulation		
S200	Radiation-crosslinked, heat-shrinkable, modified fluoropolymer	
SO, M83519	Radiation-crosslinked, heat-shrinkable polyvinylidene fluoride	
B-155	Radiation-crosslinked, heat-shrinkable polyolefin	
Solder and flux		
SO63, M83519, S03	Solder: Sn63 Pb37	Flux: ROL1 per ANSI - J - 004 (RMA Flux)
S200, SO96, SO175 series	Solder: Sn96 Ag4	Flux: ROM1 per ANSI - J - 004 (RA Flux)
B-155	Solder: SN42Bi58	Flux: ROM1 per ANSI - J - 004 (RA Flux)
Ground lead		
B-155 series	XL polyethylene	
S200 series	MIL-C-22759/91 or /87	
SO, M83519, SO175	MIL-W-22759/32 or /41	
Typical Performance		
Voltage drop	2.5 mV	
Tensile strength	Exceeds strength of ground lead	
Dielectric strength	1.0 kV immersed	
Temperature rating		
B-155	-55°C to 125°C [-67°F to 257°F]	
SO63/M83519/S03	-55°C to 150°C [-67°F to 302°F]	
SO96/SO175 series	-55°C to 175°C [-67°F to 347°F]	
S200	-55°C to 200°C [-67°F to 392°F]	
Insulation resistance	1000 megohms	

Specifications/Approvals

Series	Agency	TE
B-155	—	RT-1404
SO63*	NAS 1747	RT-1404
M83519**	MIL-S-83519/1&/2	RT-1404
SO96***	NAS 1747	RT-1404
SO175		RT-1404
S200	—	RT-1404

* Meets performance requirements of SAE-AS83519 (formerly MIL-S-83519) and NAS 1747, supplied with BiAlloy temperature indicator.
** Qualified to SAE-AS83519 (formerly MIL-S-83519), supplied with thermochromic temperature indicator.
***Meets performance requirements of SAE-AS83519 (formerly MIL-S-83519) and NAS 1747, supplied with thermochromic temperature indicator.

Installation

For proper installation of these devices, the correct heating tool and reflector attachment must be used. Any one of the following TE heating tools is recommended:

- HL1901E/HL2010E
- AA-400 Super Heater
- CV-1981
- MiniRay
- IR-1759

For detailed instructions and recommended reflector attachments, refer to the appropriate TE installation procedure:

Series	Procedure
B-155	**RPIP-824-000**
CWT	**RPIP-655-00-D**
SO63	**RCPS-100-70**
M83519 (S01/S02)	**RCPS-100-70**
SO96	**RCPS-100-70**
S03	**RCPS-100-70**
SO175	**RCPS-100-70**
S200	**RCPS-100-71**

You will find ordering information for these tools in section 10.

SolderSleeve Shield Terminators (Continued)

Table H. NAS, M83519, and TE Cross-Reference

NAS Part No.	TE D Series Part No.	NAS Comment
1744-1	D-1744-01	
1744-2	D-1744-02	
1744-3	D-1744-03	
1744-4	D-1744-04	
1744-5	D-1744-05	
1744-6	D-1744-06	
1744-7	D-1744-07	
1744-8	D-1744-08	
1745-1	D-144-25	Inactive, Use SAE-AS83519/1-1 (formerly MIL-S-83519)
1745-2	D-100-00	Inactive, Use SAE-AS83519/1-2 (formerly MIL-S-83519)
1745-3	D-101-00	Inactive, Use SAE-AS83519/1-3 (formerly MIL-S-83519)
1745-4	D-103-00	Inactive, Use SAE-AS83519/1-5 (formerly MIL-S-83519)
1745-5	D-144-26	
1745-6	D-100-31	
1745-7	D-101-31	
1745-8	D-103-31	
1745-9		Obsolete - Use NAS1745-13
1745-10		Obsolete - Use NAS1745-14
1745-11		Obsolete - Use NAS1745-15
1745-12		Obsolete - Use NAS1745-16
1745-13	D-142-83	Inactive, Use SAE-AS83519/1-1 (formerly MIL-S-83519)
1745-14	D-142-50	Inactive, Use SAE-AS83519/1-2(formerly MIL-S-83519)
1745-15	D-142-51	Inactive, Use SAE-AS83519/1-3 (formerly MIL-S-83519)
1745-16	D-142-52	Inactive, Use SAE-AS83519/1-5 (formerly MIL-S-83519)
1745-17	D-107-00	Inactive, Use SAE-AS83519/1-4 (formerly MIL-S-83519)
1745-18	D-104-00	
1745-19	D-105-00	
1745-20	D-107-31	
1745-21	D-104-31	
1745-22	D-105-31	
1745-23	D-142-56	Inactive, Use SAE-AS83519/1-4 (formerly MIL-S-83519)
1745-24	D-142-65	
1745-25	D-142-66	
1746-1	D-144-25	Inactive, Use SAE-AS83519/1-1 (formerly MIL-S-83519)
1746-2	D-144-00	Inactive, Use SAE-AS83519/1-2 (formerly MIL-S-83519)
1746-3	D-144-01	Inactive, Use SAE-AS83519/1-3 (formerly MIL-S-83519)
1746-4	D-144-02	Inactive, Use SAE-AS83519/1-5 (formerly MIL-S-83519)
1746-5	D-144-26	
1746-6	D-144-03	
1746-7	D-144-04	
1746-8	D-144-05	
1746-9	D-144-46	Inactive, Use SAE-AS83519/1-4 (formerly MIL-S-83519)
1746-10	D-144-37	

Military Part No.	TE S01/S02 Series* Part No.	TE SO63 Series** Part No.
M83519/1-1	S01-01-R	SO63-1-00
M83519/1-2	S01-02-R	SO63-2-00
M83519/1-3	S01-03-R	SO63-3-00
M83519/1-4	S01-04-R	SO63-4-00
M83519/1-5	S01-05-R	SO63-5-00
M83519/2-1	S02-01-R	SO63-1-55-20-90
M83519/2-2	S02-02-R	SO63-2-55-20-90
M83519/2-3	S02-03-R	SO63-3-55-20-90
M83519/2-4	S02-04-R	SO63-4-55-20-90
M83519/2-5	S02-05-R	SO63-5-55-20-90
M83519/2-6	S02-06-R	SO63-1-55-22-90
M83519/2-7	S02-07-R	SO63-2-55-22-90
M83519/2-8	S02-08-R	SO63-3-55-22-90
M83519/2-9	S02-09-R	SO63-4-55-22-90
M83519/2-10	S02-10-R	SO63-5-55-22-90
M83519/2-11	S02-11-R	SO63-1-55-24-90
M83519/2-12	S02-12-R	SO63-2-55-24-90
M83519/2-13	S02-13-R	SO63-3-55-24-90
M83519/2-14	S02-14-R	SO63-4-55-24-90
M83519/2-15	S02-15-R	SO63-5-55-24-90
M83519/2-16	S02-16-R	SO63-1-55-26-90
M83519/2-17	S02-17-R	SO63-2-55-26-90
M83519/2-18	S02-18-R	SO63-3-55-26-90
M83519/2-19	S02-19-R	SO63-4-55-26-90
M83519/2-20	S02-20-R	SO63-5-55-26-90

* QPL listed to SAE-AS83519 (formerly MIL-S-83519)
** Meets performance requirements of SAE-AS83519 (formerly MIL-S-83519)

Introduction

TE SolderSleeve coaxial cable terminators allow reliable, easy terminations in a variety of coaxial cable applications, including printed circuit boards (PCBs). The insulating and strain-relieving capabilities of SolderSleeve terminators provide the ideal solution to center-conductor breakage problems.

Designed for applications with temperatures up to 150°C [302°F], the products in this section include:

- SolderSleeve coaxial cable terminators, which allow reliable, economical attachment of coaxial cable to connector terminals, printed wiring assemblies, or solderless wrap terminals.
- One-piece SolderSleeve PCB coaxial cable terminators, which permit quick, easy, and cost-effective terminations of coaxial cable to printed circuit boards.
- RF one-step BNC/TNC connectors, which are single-piece assemblies for terminating the center conductor and the braid of a broad range of coaxial cables. They are fully intermateable with MIL-C-39012C connectors and are available in 50-ohm and 75-ohm versions (refer to pages 8-57 to 8-62 for product information).

With precisely measured solder and flux, SolderSleeve products provide exact process control of terminations. The SolderSleeve method means strong connections with the lowest possible voltage drop. Small, lightweight SolderSleeve terminators are also the ideal solution for high-density packaging problems.

SolderSleeve Coaxial Cable Terminators

Product Facts

- **Transparent polyvinylidene fluoride or polyolefin insulation sleeve provides encapsulation, inspectability, strain relief (eliminates center conductor breakage), and insulation.**
- **Prefluxed solder preform provides a controlled soldering process**
- **One-piece design provides easy installation and lower installed cost**
- **Preinstalled termination leads provide convenience and ease of installation**

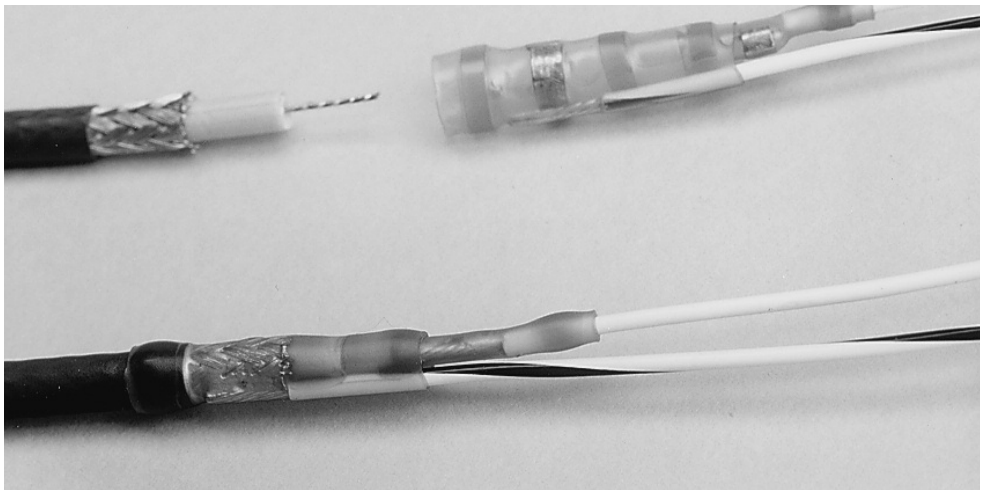

Applications

Used for terminating coaxial cable to component terminals, contacts, printed circuit boards, and solderless wrap terminals.

Product Selection Process

1. Select product series from the product options table below.
2. Select preinstalled lead type from the table below.
3. Determine cable RG number or dimensions.
4. Select part number from Table A (B-155, CWT series) or Table B (B-02X/B-04X series) on the next page.

Product Options

Product Series	Max. Operating Temp.	Use on Cables Rated (Min)	Cable Shield Plating	Part No. Selection Table	Design
B-155, CWT	125°C [257°F]	85°C [185°F]	Tin, copper	A	2-pc.
B-02X/B-04X	150°C [302°F]	125°C [257°F]	Tin, silver	B	1-pc.
D-181	150°C [302°F]	125°C [257°F]	Tin, silver	C	2-pc.
D-184	125°C [257°F]	85°C [185°F]	Tin	D	2-pc.

Preinstalled Lead Descriptions

Series	Lead Type	Plating	Stranding	AWG	Length	Color
B-155, CWT	XL polyethelene	Tin	Stranded (W1)	22	150 [6.000]	White (cntr), green (grnd)
B-021	M81822/13 (solderless wrap)	Silver	Solid-OFHC	24—30	150 [6.000]	White (cntr), blue (grnd)
B-041	M81822/13 (solderless wrap)	Silver	Solid-OFHC	24—30	150 [6.000]	White (cntr), blue (grnd)
B-043	M81822/13 (solderless wrap)	Silver	Solid-OFHC	24—30	150 [6.000]	White (cntr), blue (grnd)
B-020	55A0111 (MIL-W-22759/32)	Tin	Stranded	20—30	150 [6.000]	White (cntr), blue (grnd)
B-040	55A0111 (MIL-W-22759/32)	Tin	Stranded	20—30	150 [6.000]	White (cntr), blue (grnd)
B-044	55A0111 (MIL-W-22759/32)	Tin	Stranded	20—30	150 [6.000]	White (cntr), blue (grnd)
D-181-12XX	55A0111 (MIL-W-22759/32)	Tin	Stranded	20—30	150 [6.000]	White (cntr), white w/black stripe (grnd)
D-181-22XX	55A0111 (MIL-W-22759/32)	Tin	Stranded	20—30	150 [6.000]	White (cntr), white w/black stripe (grnd)
D-181-32XX	55A0111 (MIL-W-22759/32)	Tin	Stranded	20—30	150 [6.000]	White (cntr), white w/black stripe (grnd)
D-181-18XX	M81822/13	Silver	Solid	26 – 30	150 [6.000]	White (cntr), blue (grnd)
D-181-28XX	M81822/13	Silver	Solid	26 – 30	150 [6.000]	White (cntr), blue (grnd)
D-184	55A0111 (MIL-W-22759/32)	Tin	Stranded	20 – 26	150 [6.000]	White (cntr), white w/black stripe (grnd)

Product Characteristics

Material		
Insulation (B-02X/B-04X, D-181, D-184)	Radiation-crosslinked, heat-shrinkable polyvinylidene fluoride	
Insulation (B-155, CWT series)	Radiation-crosslinked, heat-shrinkable polyolefin	
Solder and flux (B-02X/B-04X, D-181)	Solder: Sn63 Pb37	Flux: ROL1 per ANSI-J-004 (RMA Flux)
Solder and flux (CWT series, D-184)	Solder: Sn50 Pb32 Cd18	Flux: ROM1 per ANSI-J-004 (RA Flux)
Solder and flux (B-155)	Solder: Sn42Bi58	Flux: ROM1 per ANSI-J-004 (RA Flux)
Typical Performance		
Voltage drop	2.0 mV	
Tensile strength	Exceeds strength of conductor	
Dielectric strength	2.0 kV	
Temperature rating (B-155, CWT, D-184)	-55°C to 125°C [-67°F to 257°F]	
Temperature rating (B-02X/B-04X, D-181)	-55°C to 150°C [-67°F to 302°F]	
Insulation resistance	1000 megohms	

Available in:	
Americas	■
Europe	■
Asia Pacific	■

Catalog 1654025
Revised 3-13

www.te.com

Dimensions are shown for reference purposes only. Specifications subject to change.

Dimensions are in millimeters unless otherwise specified.

USA: +1 800 522 6752
Asia Pacific: +86 0 400 820 6015
UK: +44 800 267 666

For additional support numbers please visit www.te.com

SolderSleeve Coaxial Cable Terminators (Continued)

Table A. B-155 Series Part Numbers

Cable RG Number	Dimensions		Part No. With Preinstalled Lead AWG/0.38 mm² Green/White)
	Dielectric OD	Jacket OD	
174	0.80–2.30 [.032–.091]	1.30–2.80 [.051–.110]	CWT-4174-W122-5/9
58, 122	2.00–2.80 [.079–.110]	2.50–4.40 [.100–.173]	CWT-4058-W122-5/9
59	2.80–3.30 [.110–.130]	3.20–6.00 [.125–.235]	CWT-4059-W122-5/9

Table B. B-02X/B-04X Series Part Numbers

Part 1: Coaxial Product Group Selection

Typical Compatible Part No.		Dimension Range				
RG Cable Number	TE Cable Description	Jacket OD (Max.)	Shield OD	Dielectric OD	Conductor OD	One-Piece Coaxial Product Group
RG178, RG404	5030A13XX 5028A13XX	3.40 [.134]	1.30–2.30 [.051–.091]	0.50–1.70 [.019–.067]	0.30–0.80 [.011–.032]	Group 1
RG179, RG316	5024A13XX 7530A13XX 7526A13XX 9530A13XX	4.40 [.173]	1.50–2.80 [.060–.110]	1.20–2.50 [.047–.100]	0.30–1.60 [.011–.063]	Group 2
RG180, RG302, RG303	9527A13XX 9528A13XX	6.30 [.248]	2.40–4.60 [.094–.181]	1.40–4.30 [.055–.169]	0.30–2.80 [.011–.110]	Group 3

Part 2: Product Part Number Selection

One-Piece Coaxial Product Group	Preinstalled Wire Type	Preinstalled Wire Size					
		20 AWG	22 AWG	24 AWG	26 AWG	28 AWG	30 AWG
Group 1	Stranded (M22759)	—	B-044-22-N	B-044-24-N	B-044-26-N	—	—
	Solid (M81822)	—	—	B-043-24-N	B-043-26-N	B-043-28-N	B-043-30-N
Group 2	Stranded (M22759)	B-040-20-N	B-040-22-N	B-040-24-N	B-040-26-N	B-040-28-N	B-040-30-N
	Solid (M81822)	—	—	B-041-24-N	B-041-26-N	B-041-28-N	B-041-30-N
Group 3	Stranded (M22759)	B-020-20-N	B-020-22-N	B-020-24-N	B-020-26-N	—	—
	Solid (M81822)	—	—	—	B-021-26-N	—	—

1. The B-02X/B-04X series uses a one-piece design to terminate coaxial cables rated at 125°C minimum.
2. Using Part 1 of this table, select the appropriate coaxial product group (1, 2, or 3) based on your RG cable number, TE cable description, or cable dimensions.
3. Using Part 2 of this table, select the product part number based on the coaxial product group you selected in Part 1 and the appropriate preinstalled lead type you selected on the previous page.

Table C. D-181 Series Part Numbers

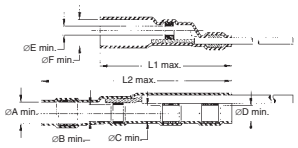

Product Name	Product Dimensions								Wire AWG
	A min.	B min.	C min.	D min.	E min.	F min.	L1 max.	L2 max.	
D-181-1220-90/9									20
D-181-1222-90/9									22
D-181-1224-90/9	3.7	3.2	2.7	2.4	0.71	2.3	17	21.5	24
D-181-1226-90/9	[0.145]	[0.125]	[0.105]	[0.095]	[0.028]	[0.09]	[0.67]	[0.85]	26
D-181-1826-6/9									26
D-181-1830-6/9									30
D-181-2220-90/9									20
D-181-2222-90/9									22
D-181-2224-90/9	4.5	4	3.45	2.9	1.1	3	17	22.7	24
D-181-2226-90/9	[0.18]	[0.16]	[0.135]	[0.115]	[0.045]	[0.12]	[0.67]	[0.895]	26
D-181-2826-6/9									26
D-181-2830-6/9									30
D-181-3220-90/9									20
D-181-3222-90/9								]	22
D-181-3224-90/9	5.2	4.7	4.45	3.95	1.3	4	17	21.5	24
D-181-3226-90/9	[0.205]	[0.185]	[0.175]	[0.155]	[0.055]	[0.16]	[0.67]	[0.85]	26
D-181-3826-6/9									26
D-181-3830-6/9									30

Table D. D-184 Series Part Numbers

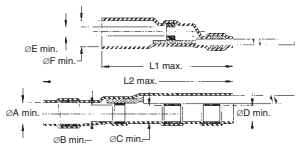

Product Name	Product Dimensions								Wire AWG
	ØA min.	ØB min.	ØC min.	ØD min.	ØE min.	ØF min.	L1 max.	L2 max.	
D-184-1220-90/9									20
D-184-1222-90/9	3.7	3.2	2.7	2.4	0.71	2.3	17	21.5	22
D-184-1224-90/9	[0.145]	[0.125]	[0.105]	[0.095]	[0.028]	[0.09]	[0.67]	[0.85]	24
D-184-1226-90/9									26
D-184-2220-90/9									20
D-184-2222-90/9	4.5	4	3.45	2.9	1.1	3	17	22.7	22
D-184-2224-90/9	[0.18]	[0.16]	[0.135]	[0.115]	[0.045]	[0.12]	[0.67]	[0.895]	24
D-184-2226-90/9									26

Catalog 1654025
Revised 3-13

www.te.com

Dimensions are shown for reference purposes only. Specifications subject to change.

Dimensions are in millimeters unless otherwise specified.

USA: +1 800 522 6752
Asia Pacific: +86 0 400 820 6015
UK: +44 800 267 666

For additional support numbers please visit www.te.com

SolderSleeve PCB/Coaxial Cable Terminators

Product Facts

- **Provides a completely shielded, low-resistance, matched-impedance termination with very low VSWR (D-607 series only)**
- **Transparent polyvinylidene fluoride insulation sleeve provides encapsulation, inspectability, strain relief, and insulation**
- **Prefluxed solder preform provides a controlled soldering process**
- **One-piece design offers easy installation and lower installed cost**
- **Preinstalled PCB termination body provides convenience and ease of installation**

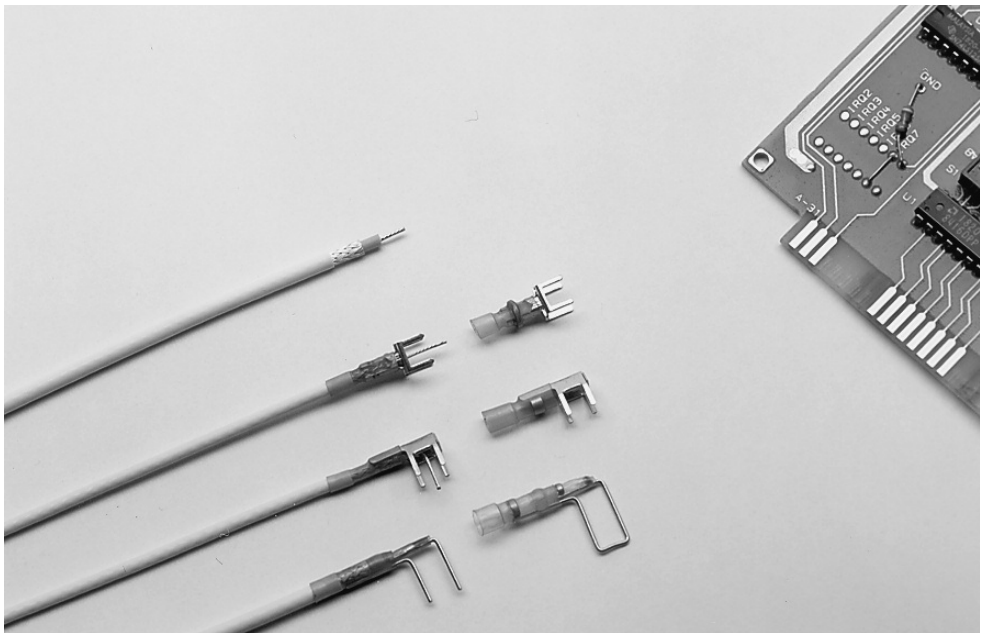

Applications

Used for terminating coaxial cable to printed circuit boards.

Installation

For proper installation of these devices, the correct heating tool and reflector attachment must be used. Any one of the following TE heating tools is recommended:

- HL1910E/HL2010E
- AA-400 Super Heater
- IR-1759 MiniRay
- CV-1981

Refer to TE installation procedure ES-61139 for detailed instructions and recommended reflector attachments.

You will find ordering information for these tools in Section 10.

Product Selection Process

1. Select product series from the Product Options table below.
2. Determine cable RG number or outside diameter dimensions.
3. Select the appropriate part number from Table A (D-607 series) or Table B (B-046 series).

- For D-607 (matched impedance) series, determine straight or right-angle entry to PCB and grid pattern, then select the appropriate part number from Table A on the next page.
- For B-046 (PinPak, or pin to ground) series, determine hole spacing and diameter. Refer to Table B for product selection (see illustration below for cable dimensions).

Available in:	
Americas	■
Europe	■
Asia Pacific	■

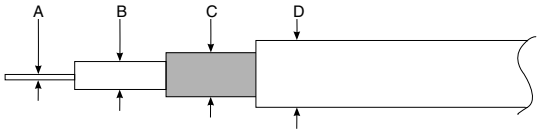

Product Options

Product Series	Typical Application Performance	Shield Method	Part No. Selection Table
D-607	Matched impedance up to 2.3 GHz	Metal body	A
B-046	Effective transmission up to 100 MHz	Pin to ground	B

Catalog 1654025
Revised 3-13

www.te.com

Dimensions are shown for reference purposes only. Specifications subject to change.

Dimensions are in millimeters unless otherwise specified.

USA: +1 800 522 6752
Asia Pacific: +86 0 400 820 6015
UK: +44 800 267 666

For additional support numbers please visit www.te.com

SolderSleeve PCB/Coaxial Cable Terminators (Continued)

Specifications/Approvals

Series	TE
D-607	RT-1404
B-046	RT-1404

Table A. D-607 Series Part Numbers

RG Cable No.	Cable Dimensions (mm/in) Max. Outside Diameter			Part No. Entry to PCB		
	Jacket	Shield	Dielectric	Straight grid 5.08 [.200]	Right-Angle Grid 5.08 [.200]	Straight Grid 2.54 [.100]
174, 178, 179, 316, 404	1.5–3.55 [.060–.140]	1.1–3.15 [.045–.125]	0.60–2.25 [.025–.090]	D-607-09	D-607-10	D-607-40*

Table B. B-046 Series Part Numbers

RG Cable No.	Cable Dimensions				Pin Diameter	Part No.		
	A	B	C	D Max.		Spacing Between Pins 2.54 [.100]	5.08 [.200]	6.35 [.250]
178, 404	0.30–0.80 [.011–.032]	0.5–1.7 [.019–.067]	1.3–2.3 [.050–.091]	3.4 [.134]	0.6 [.023] 0.8 [.031]	B-046-14-N	B-046-10-N	B-046-12-N
							B-046-11-N	B-046-13-N
179, 316	0.3–1.6 [.011–.063]	1.2–2.5 [.047–.100]	.1.5–2.8 [.060–.110]	4.4 [.173]	0.6 [.023] 0.8 [.031]	B-046-15-N	B-046-66-N	B-046-16-N
							B-046-68-N	B-046-18-N

Product Characteristics

Material		
Insulation	Radiation-crosslinked, heat-shrinkable polyvinylidene fluoride	
Solder and flux	Solder: Sn63 Pb37	Flux: ROL1 per ANSI - J - 004 (RMA flux)
Termination body/pin	Copper alloy, solder-plated	
Typical Performance		
Voltage drop	2.0 mV	
Tensile strength	Exceeds strength of conductor	
Dielectric strength	2.0 kV	
Temperature rating	-55°C to 150°C [-67°F to 302°F]	
Insulation resistance	1000 megohms	
Electrical Performance (typical) D-607 Series Only		
Frequency	**VSWR (D-607-09, -40)**	**VSWR (D-607-10)**
350 MHz	1.04 max.	1.04 max.
700 MHz	1.05 max.	1.09 max.
2.3 GHz	1.09 max.	1.12 max.

Dimensions are shown for reference purposes only. Specifications subject to change.

Dimensions are in millimeters unless otherwise specified.

USA: +1 800 522 6752
Asia Pacific: +86 0 400 820 6015
UK: +44 800 267 666

For additional support numbers please visit www.te.com

RF One-Step BNC/TNC Connectors

Product Facts

- Easy, quick installation
- Outstanding cable-retention force
- Solder-solder connection type (center conductor and braid)
- One-step termination for easy, quick installation and lower installed cost
- Exceptional cable retention force to withstand high vibration and frequent mates and unmates
- Fully soldered center conductor and braid
- Excellent built-in strain relief against vibration and excessive handling
- Long-term reliability
- Controlled soldering termination
- Use with standard RG/U cables and TE Cheminax cables
- Three product sizes to accommodate a wide range of cables
- Meets performance requirements of MIL-C-39012 up to 2.8 GHz

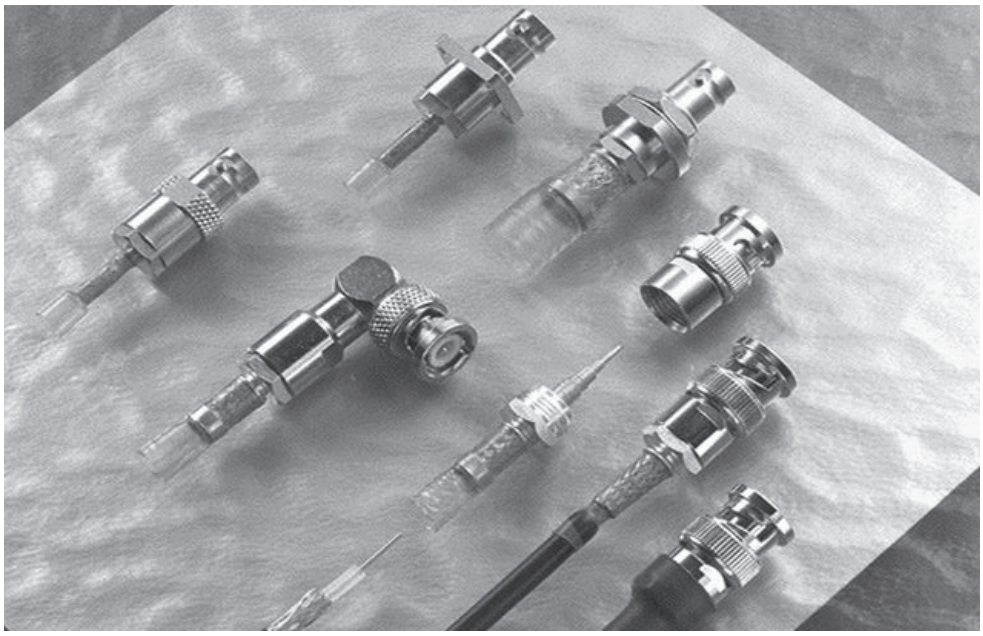

Applications

One-Step BNC/TNC connectors are single-piece assemblies for terminating the center conductor and the braid of a broad range of coaxial cables.

The connectors are fully intermateable with MIL-C-39012 connectors and are available in 50-ohm and 75-ohm versions.

Specifications	Installation	
TE RB-115	For proper installation of these devices, the correct heating tool and reflector attachment must be used. Any one of the following TE heating tools is recommended: • Steinel® Model HL-2010E-230V • CV-1981	Refer to TE installation procedure RPIP-683-00 for detailed instructions.

Available in:	
Americas	■
Europe	■
Asia Pacific	■

Catalog 1654025
Revised 3-13

www.te.com

Dimensions are shown for reference purposes only. Specifications subject to change.

Dimensions are in millimeters unless otherwise specified.

USA: +1 800 522 6752
Asia Pacific: +86 0 400 820 6015
UK: +44 800 267 666

For additional support numbers please visit www.te.com

RF One-Step BNC/TNC Connectors (Continued)

Product Options and Part Numbering System

RXX - XX - X - XX	Connector Style: Dash No. -XX	Connector Style: Style	Connector Type: TNC	Connector Type: BNC
	-00	Straight plug	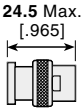 24.5 Max. [.965]	24.5 max. [.965]
	-01	Right-angle plug	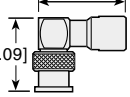 33.5 Max. [1.32]; 28 [1.09]	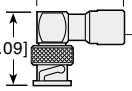 31.5 max. [1.23]; 28 [1.09]
	-02	Straight bulkhead jack	25.4 max. [1.0]	25.4 Max. [1.0]
	-03	Straight jack	25.4 max. [1.0]	25.4 Max. [1.0]
	-04	Straight panel jack	25.4 Max. [1.0]; 4 x M2.5 x 0.45	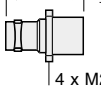 25.4 Max. [1.0]; 4 x M2.5 x 0.45

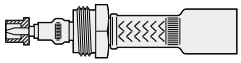

Male

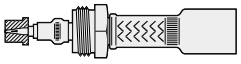

Female

Connector size

L = Large
M = Medium
S = Small

50 = 50 ohms
75 = 75 ohms

D = Nickel-plated brass body, gold-plated brass pin

B = BNC
T = TNC

Example: RBD-50-L-00 is a BNC connector, 50 ohms, large size, with straight plug body.

Catalog 1654025
Revised 3-13

www.te.com

Dimensions are shown for reference purposes only. Specifications subject to change.

Dimensions are in millimeters unless otherwise specified.

USA: +1 800 522 6752
Asia Pacific: +86 0 400 820 6015
UK: +44 800 267 666

For additional support numbers please visit www.te.com

RF One-Step BNC/TNC Connectors (Continued)

Product Characteristics

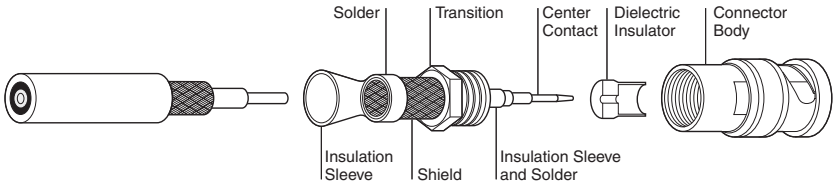

Material	
Center contact	Gold-plated beryllium copper (female)
	Gold-plated brass (male)
Dielectric insulator	PTFE
Transition	Silver-plated brass
Connector body	Nickel-plated brass
Solder and flux	Sn63Pb37, RMA flux
Braided shield	Tin-plated copper wire per ASTM B3
Insulation sleeve	Radiation-crosslinked, heat-shrinkable polyvinylidene fluoride, transparent blue
Strain relief/sealing sleeve	Radiation-crosslinked, heat-shrinkable modified polyolefin with adhesive, black
Typical Performance	
Dielectric withstand voltage	1500 V
Insulation resistance	5000 megohms
Temperature rating	-55˚C to 150˚C [-67˚F to 302˚F]
Contact resistance-straight	Inner = 1.5 milliohms, outer = 1.0 milliohm
Contact resistance — right-angle	Inner = 2.5 milliohms, outer = 1.5 milliohms
Cable retention force	295N (66 lb) to 822N (196 lb)
Voltage rating	500 V RMS
Connector durability	500 mating cycles minimum
Electrical Performance	
Nominal impedance	50 and 75 ohms
Frequency range	Up to 2.8 GHz

Part Selection Process

1. From Product Options and Part Numbering System on page 8-58, select the connector style you need (BNC or TNC, plug or jack, male or female contacts).
2. From the tables that follow, find the appropriate table for the connector style you selected.
3. From the appropriate table, select the connector part number based on the RG cable type or cable part number. For cable types not shown use the cable dimensions.
   Note: The cable dimensions in each table are keyed to the diagram below.

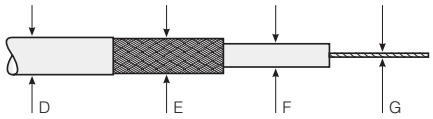

RF One-Step BNC/TNC Connectors (Continued)

Impedance (ohms)	Cable Type: RG Cables	Cable Type: Cables	Cable Dimensions: D (Min.–Max.)	Cable Dimensions: E (Min.–Max.)	Cable Dimensions: F (Max.)	Cable Dimensions: G (Max.)	Part No.
BNC Straight Plugs, Male Contacts							
50	RG-174, RG-178, RG-188, RG-196,RG–316	5026A1311, 5028A1317, 5030A1317	1.50–5.50 [.060–.217]	0.90–3.00 [.035–.118]	1.55 [.060]	0.65 [.025]	RBD-50-S-00
50	RG-58, RG-141, RG-142, RG-303, RG-400	5019D3318, 5021D1331, 5020A1311	3.50–7.00 [.138–.276]	2.10–5.00 [.083–.197]	3.00 [.118]	1.25 [.050]	RBD-50-M-00
50	RG-165, RG-215, RG-213, RG-225, RG-214	5012F3332, 5012A3311	5.00–12.50 [.197–.500]	4.10–9.50 [.161–.375]	7.30 [.287]	2.45 [.100]	RBD-50-L-00
75	RG-179, RG-187	7530A1317	1.50–5.00 [.060–.217]	5 0.90-3.00 [.035–.118]	1.55 [.060]	0.65 [.025]	RBD-75-S-00
75	—	7524A1311, 7528A1317	3.50–7.00 [.138–.276]	2.10–5.00 [.083–.197]	3.70 [.126]	1.25 [.050]	RBD-75-M-00
75	RG-6, RG-11, RG-12, RG-59 RG-144, RG-216	—	5.00–.12.50 [.197–.500]	4.10–9.50 [.161–.375]	7.3 [.287]	2.45 [.100]	RBD-75-L-00
BNC Right-Angle Plugs, Male Contacts							
50	RG-174, RG-178, RG-188, RG-196,RG–316	5026A1311, 5028A1317, 5030A1317	1.50–5.50 [.060–.217]	0.90–3.00 [.035–.118]	1.55 [.060]	0.65 [.025]	RBD-50-S-01
50	RG-58, RG-141, RG-142, RG-303, RG-400	5019D3318, 5021D1331, 5020A1311	3.50–7.00 [.138–.276]	2.10–5.00 [.083–.197]	3.00 [.118]	1.25 [.050]	RBD-50-M-01
50	RG-165, RG-215, RG-213, RG-225, RG-214	5012F3332, 5012A3311	5.00–12.50 [.197–.500]	4.1–9.50 [.161–.375]	7.30 [.287]	2.45 [.100]	RBD-50-L-01
75	RG-179, RG-187	7530A1317	1.50–5.50 [.060–.217]	0.9-3.00 [.035–.118]	1.55 [.060]	0.65 [.025]	RBD-75-S-01
75	—	524A1311, 7528A1317	3.50–7.00 [.138–.276]	2.1–5.00 [.083–.197]	3.70 [.146]	1.25 [.050]	RBD-75-M-01
75	RG-6, RG-11, RG-12, RG-59 RG-144, RG-216	—	5.00–12.50 [.197–.500]	4.1–9.50 [.161–.375]	7.30 [.287]	2.45 [.100]	RBD-75-L-01
BNC Straight Bulkhead Jacks, Female Contacts							
50	RG-174, RG-178, RG-188, RG-196,RG–316	5026A1311, 5028A1317, 5030A1317	1.50–5.50 [.060–.217]	0.90–3.00 [.035–.118]	1.55 [.060]	0.65 [.025]	RBD-50-S-02
50	RG-58, RG-141, RG-142, RG-303, RG-400	5019D3318, 5021D1331, 5020A1311	3.50–7.00 [.138–.276]	2.10–5.00 [.083–.197]	3.00 [.118]	1.25 [.050]	RBD-50-M-02
50	RG-165, RG-215, RG-213, RG-225, RG-214	5012F3332, 5012A3311	5.00–12.50 [.197–.500]	4.10–9.50 [.161–.375]	7.30 [.287]	2.45 [.100]	RBD-50-L-02
75	RG-179, RG-187	7530A1317	1.50–5.00 [.060–.217]	5 0.90-3.00 [.035–.118]	1.55 [.060]	0.65 [.025]	RBD-75-S-02
75	—	75 7524A1311, 7528A1317	3.50–7.00 [.138–.276]	2.10–5.00 [.083–.197]	3.70 [.146]	1.25 [.050]	RBD-75-M-02
75	RG-6, RG-11, RG-12, RG-59 RG-144, RG-216	—	5.00-12.50 [.197–.500]	4.10–9.50 [.161–.375]	7.30 [.287]	2.45 [.100]	RBD-75-L-02
BNC Straight Jacks, Female Contacts							
50	RG-174, RG-178, RG-188, RG-196,RG–316	5026A1311, 5028A1317, 5030A1317	1.50–5.50 [.060–.217]	0.90–3.00 [.035–.118]	1.55 [.060]	0.65 [.025]	RBD-50-S-03
50	RG-58, RG-141, RG-142, RG-303, RG-400	5019D3318, 5021D1331, 5020A1311	3.50–7.00 [.138–.276]	2.10–5.00 [.083–.197]	3.00 [.118]	1.25 [.050]	RBD-50-M-03
50	RG-165, RG-215, RG-213, RG-225, RG-214	5012F3332, 5012A3311	5.00–12.50 [.197–.500]	4.10–9.50 [.161–.375]	7.30 [.287]	2.45 [.100]	RBD-50-L-03
75	RG-179, RG-187	7530A1317	1.50–5.50 [.060–.217]	0.90–3.00 [.035–.118]	1.55 [.060]	0.65 [.025]	RBD-75-S-03
75	—	75 7524A1311, 7528A1317	3.50–7.00 [.138–.276]	2.10–5.00 [.083–.197]	3.70 [.146]	1.25 [.050]	RBD-75-M-03
75	RG-6, RG-11, RG-12, RG-59 RG-144, RG-216	—	5.00–12.50 [.197–.500]	4.10–9.50 [.161–.375]	7.30 [.287]	2.45 [.100]	RBD-75-L-03
BNC Straight Panel Jacks, Female Contacts							
50	RG-174, RG-178, RG-188, RG-196,RG–316	5026A1311, 5028A1317, 5030A1317	1.50–5.50 [.060–.217]	0.90–3.00 [.035–.118]	1.55 [.060]	0.65 [.025]	RBD-50-S-04
50	RG-58, RG-141, RG-142, RG-303, RG-400	5019D3318, 5021D1331, 5020A1311	3.50–7.00 [.138–.276]	2.10–5.00 [.083–.197]	3.00 [.118]	1.25 [.050]	RBD-50-M-04
50	RG-165, RG-215, RG-213, RG-225, RG-214	5012F3332, 5012A3311	5.00–12.50 [.197–.500]	4.10–9.50 [.161–.375]	7.30 [.287]	2.45 [.100]	RBD-50-L-04
75	RG-179, RG-187	7530A1317	1.50–5.50 [.060–.217]	0.90–3.00 [.035–.118]	1.55 [.060]	0.65 [.025]	RBD-75-S-04
75	—	7524A1311, 7528A1317	3.50–7.00 [.138–.276]	2.10–5.00 [.083–.197]	3.70 [.146]	1.25 [.050]	RBD-75-M-04
75	RG-6, RG-11, RG-12, RG-59 RG-144, RG-216	—	5.00–12.50 [.197–.500]	4.10–9.5o [.161–.375]	7.30 [.287]	2.45 [.100]	RBD-75-L-04

Dimensions are shown for reference purposes only. Specifications subject to change.

Dimensions are in millimeters unless otherwise specified.

USA: +1 800 522 6752
Asia Pacific: +86 0 400 820 6015
UK: +44 800 267 666

For additional support numbers please visit www.te.com

RF One-Step BNC/TNC Connectors (Continued)

TNC Coaxial Connectors

Impedance (ohms)	Cable Type: RG Cables	Cable Type: Cables	Cable Dimensions: D (Min.–Max.)	Cable Dimensions: E (Min.–Max.)	Cable Dimensions: F (Max.)	Cable Dimensions: G (Max.)	Part No.
TNC Straight Plugs, Male Contacts							
50	RG-174, RG-178, RG-188, RG-196,RG–316	5026A1311, 5028A1317, 5030A1317	1.50–5.50 [.060–.217]	0.90–3.00 [.035–.118]	1.55 [.060]	0.65 [.025]	RTD-50-S-00
50	RG-58, RG-141, RG-142, RG-303, RG-400	5019D3318, 5021D1331, 5020A1311	3.50–7.00 [.138–.276]	2.10–5.00 [.083–.197]	3.00 [.118]	1.25 [.050]	RTD-50-M-00
50	RG-165, RG-215, RG-213, RG-225, RG-214	5012F3332, 5012A3311	5.00–12.50 [.197–.500]	4.10–9.50 [.161–.375]	7.30 [.287]	2.45 [.100]	RTD-50-L-00
75	RG-179, RG-187	7530A1317	1.50–5.50 [.060–.217]	0.90-3.00 [.035–.118]	1.55 [.060]	0.65 [.025]	RTD-75-S-00
75	—	7524A1311, 7528A1317	3.50–7.00 [.138–.276]	2.10–5.00 [.083–.197]	3.70 [.146]	1.25 [.050]	RTD-75-M-00
75	RG-6, RG-11, RG-12, RG-59 RG-144, RG-216	—	5.00–12.50 [.197–.500]	4.10–9.50 [.161–.375]	7.30 [.287]	2.45 [.100]	RTD-75-L-00
TNC Straight Jacks, Female Contacts							
50	RG-174, RG-178, RG-188, RG-196,RG–316	5026A1311, 5028A1317, 5030A1317	1.5–5.5 [.060–.217]	0.9–3.0 [.035–.118]	1.55 [.060]	0.65 [.025]	RTD-50-S-03
50	RG-58, RG-141, RG-142, RG-303, RG-400	5019D3318, 5021D1331, 5020A1311	3.5–7.0 [.138–.276]	2.1–5.0 [.083–.197]	3.0 [.118]	1.25 [.050]	RTD-50-M-03
50	RG-165, RG-215, RG-213, RG-225, RG-214	5012F3332, 5012A3311	5.0–12.5 [.197–.500]	4.1–9.5 [.161–.375]	7.3 [.287]	2.45 [.100]	RTD-50-L-03
75	RG-179, RG-187	7530A1317	1.5–5.5 [.060–.217]	0.9–3.0 [.035–.118]	1.55 [.060]	0.65 [.025]	RTD-75-S-03
75	—	7524A1311, 7528A1317	3.5–7.0 [.138–.276]	2.1–5.0 [.083–.197]	3.7 [.146]	1.25 [.050]	RTD-75-M-03
75	RG-6, RG-11, RG-12, RG-59 RG-144, RG-216	—	5.0–12.5 [.197–.500]	4.1–9.5 [.161–.375]	7.3 [.287]	2.45 [.100]	RTD-75-L-03
TNC Straight Panel Jacks, Female Contacts							
50	RG-174, RG-178, RG-188, RG-196,RG–316	5026A1311, 5028A1317, 5030A1317	1.5–5.5 [.060–.217]	0.9–3.0 [.035–.118]	1.55 [.060]	0.65 [.025]	RTD-50-S-04
50	RG-58, RG-141, RG-142, RG-303, RG-400	5019D3318, 5021D1331, 5020A1311	3.5–7.0 [.138–.276]	2.1–5.0 [.083–.197]	3.0 [.118]	1.25 [.050]	RTD-50-M-04
50	RG-165, RG-215, RG-213, RG-225, RG-214	5012F3332, 5012A3311	5.0–12.5 [.197–.500]	4.1–9.5 [.161–.375]	7.3 [.287]	2.45 [.100]	RTD-50-L-04
75	RG-179, RG-187	7530A1317	1.5–5.5 [.060–.217]	0.9–3.0 [.035–.118]	1.55 [.060]	0.65 [.025]	RTD-75-S-04
75	—	7524A1311, 7528A1317	3.5–7.0 [.138–.276]	2.1–5.0 [.083–.197]	3.7 [.146]	1.25 [.050]	RTD-75-M-04
75	RG-6, RG-11, RG-12, RG-59 RG-144, RG-216	—	5.0–12.5 [.197–.500]	4.1–9.5 [.161–.375]	7.3 [.287]	2.45 [.100]	RTD-75-L-04

Dimensions are shown for reference purposes only. Specifications subject to change.

Dimensions are in millimeters unless otherwise specified.

USA: +1 800 522 6752
Asia Pacific: +86 0 400 820 6015
UK: +44 800 267 666

For additional support numbers please visit www.te.com

RF One-Step BNC/TNC Connectors (Continued)

TNC Coaxial Connectors

Panel thickness: 3.2 [.125] max.

RBD-XX-X-04
RTD-XX-X-04

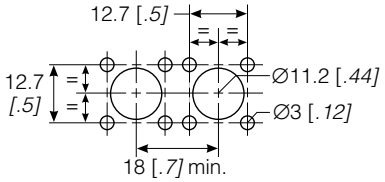

RBD-XX-X -02
RTD-XX-X -02

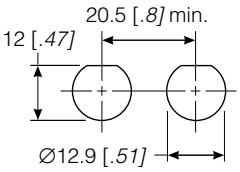

Cable Type			Cable Dimensions				Part No.
Impedance (ohms)	RG Cables	Cables	D (Min.–Max.)	E (Min.–Max.)	F (Max.)	G (Max.)	
TNC Straight Bulkhead Jacks, Female Contacts							
50	RG-174, RG-178, RG-188, RG-196,RG–316	5026A1311, 5028A1317, 5030A1317	1.50–5.50 [.060–.217]	0.90–3.00 [.035–.118]	1.55 [.060]	0.65 [.025]	RTD-50-S-02
50	RG-58, RG-141, RG-142, RG-303, RG-400	5019D3318, 5021D1331, 5020A1311	3.5–7.0 [.138–.276]	2.10–5.00 [.083–.197]	3.00 [.118]	1.25 [.050]	RTD-50-M-02
50	RG-165, RG-215, RG-213, RG-225, RG-214	5012F3332, 5012A3311	5.0–12.5 [.197–.500]	4.10–9.50 [.161–.375]	7.30 [.287]	2.45 [.100]	RTD-50-L-02
75	RG-179, RG-187	7530A1317	1.5–5.5 [.060–.217]	0.90–3.00 [.035–.118]	1.55 [.060]	0.65 [.025]	RTD-75-S-02
75	—	7524A1311, 7528A1317	3.5–7.0 [.138–.276]	2.10–5.00 [.083–.197]	3.70 [.146]	1.25 [.050]	RTD-75-M-02
75	RG-6, RG-11, RG-12, RG-59 RG-144, RG-216	—	5.0–12.5 [.197–.500]	4.10–9.50 [.161–.375]	7.30 [.287]	2.45 [.100]	RTD-75-L-02
TNC Right-Angle Plugs, Male Contacts							
50	RG-174, RG-178, RG-188, RG-196,RG–316	5026A1311, 5028A1317, 5030A1317	1.50–5.50 [.060–.217]	0.90–3.00 [.035–.118]	1.55 [.060]	0.65 [.025]	RTD-50-S-01
50	RG-58, RG-141, RG-142, RG-303, RG-400	5019D3318, 5021D1331, 5020A1311	3.50–7.00 [.138–.276]	2.10–5.00 [.083–.197]	3.00 [.118]	1.25 [.050]	RTD-50-M-01
50	RG-165, RG-215, RG-213, RG-225, RG-214	5012F3332, 5012A3311	5.00–12.50 [.197–.500]	4.10–9.50 [.161–.375]	7.30 [.287]	2.45 [.100]	RTD-50-L-01
75	RG-179, RG-187	7530A1317	1.50–5.50 [.060–.217]	0.90–3.00 [.035–.118]	1.55 [.060]	0.65 [.025]	RTD-75-S-01
75	—	7524A1311, 7528A1317	3.50–7.00 [.138–.276]	2.10–5.00 [.083–.197]	3.70 [.146]	1.25 [.050]	RTD-75-M-01
75	RG-6, RG-11, RG-12, RG-59 RG-144, RG-216	—	5.0–12.5 [.197–.500]	4.10–9.50 [.161–.375]	7.30 [.287]	2.45 [.100]	RTD-75-L-01

Dimensions are shown for reference purposes only. Specifications subject to change.

Dimensions are in millimeters unless otherwise specified.

USA: +1 800 522 6752
Asia Pacific: +86 0 400 820 6015
UK: +44 800 267 666

For additional support numbers please visit www.te.com

Introduction

The question is, how to meet growing performance requirements for shielded cable system fabrication and maintenance while minimizing electromagnetic interference (EMI). The answer is TE SolderShield cable splices. SolderShield devices are one-piece products consisting of a flux-coated, solder-impregnated copper shield braid encased in a heat-shrinkable insulation sleeve.

SolderShield cable-to-cable splice kits, designed for single-conductor or multi-conductor shielded cables, are ideal for fabrication/repair/rework while restoring the electrical integrity of the cable.

SolderShield devices perform even in demanding environments. They are reliable, versatile, and easy to install.

Catalog 1654025
Revised 3-13

www.te.com

Dimensions are shown for reference purposes only. Specifications subject to change.

Dimensions are in millimeters unless otherwise specified.

USA: +1 800 522 6752
Asia Pacific: +86 0 400 820 6015
UK: +44 800 267 666

For additional support numbers please visit www.te.com

SolderShield Shielded and Coaxial Cable Splices

Product Facts

- **Flux-coated, solder-impregnated copper shield braid encased in a transparent heat-shrinkable insulation sleeve provides a controlled soldering process, encapsulation, inspectability, strain relief, and insulation**
- **One-piece design provides easy installation and lower installed cost**
- **Circumferential (360°) shielding results in EMI protection and shield continuity equal to or better than the original cable**
- **Conductor splices are made using MiniSeal crimp products, which are recognized by MIL-S-81824 and MIL-W-5088**

Applications

Used for splicing a wide range of cables, including coaxial and multiconductor cables.

SolderShield devices can be used to repair or splice shielded or coaxial cables. These products consist of a MiniSeal crimp splice plus a flux-coated, solder-impregnated copper shield encased in a heat-shrinkable sealing sleeve, for splicing the shields. SolderShield kits terminate single- or multiple-conductor cables, eliminate EMI problems at the splice, and provide strain relief for the cable.

Product Selection Process

For splicing multiconductor cables refer to Table A.

For splicing coaxial cables refer to Table B.

Installation

For proper installation of these devices, the correct heating tool and reflector attachment must be used. Any one of the following TE heating tools is recommended:

- HL1910E/HL2010E
- IR-1759 MiniRay
- CV-1981

Refer to TE installation procedure RCPS-150-02 (D-150 series) and RPIP-699-00 (B-202 series) for detailed instructions and recommended reflector attachment.

You will find ordering information for most of these tools in Section 10.

Specifications/Approvals

Series	Military	TE
D-150	US: M81824 (conductor splice only) UK: RAF AP 1130-2008-1	RT-1404

Available in:	
Americas	■
Europe	■
Asia Pacific	■

Catalog 1654025
Revised 3-13

www.te.com

Dimensions are shown for reference purposes only. Specifications subject to change.

Dimensions are in millimeters unless otherwise specified.

USA: +1 800 522 6752
Asia Pacific: +86 0 400 820 6015
UK: +44 800 267 666

For additional support numbers please visit www.te.com

SolderShield Shielded and Coaxial Cable Splices (Continued)

Table A. Multiconductor Cable Splices

Each SolderShield part consists of a SolderShield splice and one or more conductor splices. Refer to information below for description and numbers of conductor splices.

SolderShield Splice

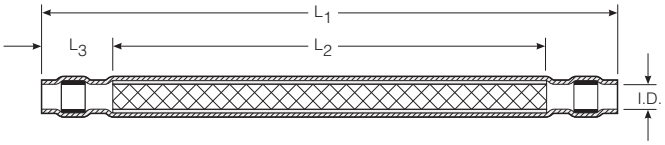

Crimp Splice

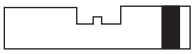

SolderShield Product Dimensions

Part No.		Dimensions				Conductor Splice Size Range CMA [mm²] Min.–Max.	Color Code	Quantity Per Kit
Tin Plated	Nickel Plated	L1 Max.	L2 Nom.	L3 Min.	ID Min.			
D-150-0168	D-150-0228	80.50 [3.17]	50.00 [1.97]	10.20 [.400]	3.00 [.118]	304–1510 [0.15–0.75]	Red	1
D-150-0169	D-150-0229	80.50 [3.17]	50.00 [1.97]	10.20 [.400]	4.00 [.157]	779–2680 [0.39–1.34]	Blue	1
D-150-0170	D-150-0230	80.50 [3.17]	50.00 [1.97]	10.20 [.400]	5.00 [.197]	1900–6755 [0.95–3.37]	Yellow	1
D-150-0174	D-150-0231	10.60 [4.17]	75.00 [2.95]	10.20 [.400]	4.00 [.157]	304–1510 [0.15–0.75]	Red	2
D-150-0175	D-150-0232	10.60 [4.17]	75.00 [2.95]	10.20 [.400]	5.00 [.197]	779–2680 [0.39–1.34]	Blue	2
D-150-0176	D-150-0233	10.60 [4.17]	75.00 [2.95]	10.20 [.400]	6.00 [.236]	1900–6755 [0.95–3.37]	Yellow	2
D-150-0177	D-150-0234	10.60 [4.17]	75.00 [2.95]	10.20 [.400]	9.00 [.356]	304–1510 [0.15–0.75]	Yellow	2
D-150-0178	D-150-0235	10.60 [4.17]	75.00 [2.95]	10.20 [.400]	4.00 [.157]	304–1510 [0.15–0.75]	Red	4
D-150-0179	D-150-0236	10.60 [4.17]	75.00 [2.95]	10.20 [.400]	5.00 [.197]	779–2680 [0.39–1.34]	Red	4
D-150-0180	D-150-0237	10.60 [4.17]	75.00 [2.95]	10.20 [.400]	6.00 [.236]	1900–6755 [0.95–3.37]	Blue	4
D-150-0181	D-150-0238	10.60 [4.17]	75.00 [2.95]	10.20 [.400]	9.00 [.353]	1900–6755 [0.95–3.37]	Yellow	4

Note: The SolderShield splice kits listed in this table are for 1:1 cable splices. The kits can be used on cables with tin-, silver-, and nickel-plated copper conductors. All the kits have environmental-sealing capability. The cable temperature rating must be 125°C minimum.

To find the splice kit part number for your application:

1. Determine the number of conductors in the cable to be spliced.
2. Determine the gauge of each conductor or the maximum jacket OD.
3. Determine the conductor plating.
4. Select the appropriate part number from the table above.

Dimensions are shown for reference purposes only. Specifications subject to change.

Dimensions are in millimeters unless otherwise specified.

USA: +1 800 522 6752
Asia Pacific: +86 0 400 820 6015
UK: +44 800 267 666

For additional support numbers please visit www.te.com

SolderShield Shielded and Coaxial Cable Splices (Continued)

Table B. Coaxial Cable Splices

Each SolderShield part consists of a SolderShield splice and one or more conductor splices. Refer to information below for description and numbers of conductor splices.

SolderShield Splice

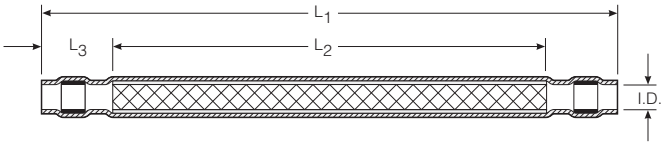

Crimp Splice

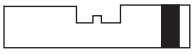

RG Cable No.	Cable Description	Conductor Splice Qty/Kit	Part No.	SolderShield Dimensions		
				L1 Max	L2 Min	ID Min
8A, 9B, 11	5012A3311	1	D-150-0214	80.50 [3.170]	50.00 [1.970]	12.00 [.472]
13, 26, 31	5012E1339					
115, 144, 149	7518A1311					
165, 213, 214	—					
216, 235, 391	—					
393, 397	—					
178, 196,	5028A1317	1	D-150-0094	80.50 [3.170]	50.00 [1.970]	3.00 [.118]
179, 187, 188,	7528A1317					
316, 404, M17/138-00001,	5030A1317					
M17/136-00001	7530A1317					
180, 195	5024A1311	1	D-150-0095	80.50 [3.170]	50.00 [1.970]	4.00 [.157]
M17/137-00001	7526A1311					
M17/139-00001	9527A1318					
—	9530E1014					
124, 140, 141	5020A1311	1	D-150-0096	80.50 [3.170]	50.00 [1.970]	5.00 [.236]
159, 302, 303	5022A1311					
—	7522A1311					
—	7523D1331					
—	7524A1311					
29, 30, 55B	5019D3318	1	B-202-81*	56.00 [2.200]	23.00 [.900]	7.00 [.275]
58, 223	5021D1331					
—	5022A1311					
59, 62, 71	7523D1331	1	B-202-82*	56.00 [2.200]	23.00 [.900]	7.00 [.275]
—	7524A1311					
—	9524A1311					

*These kits use solder to terminate the center conductors. All other kits use crimp.
All kits are for one-to-one coaxial cable splices, and all kits have environmental sealing capability. Each kit contains products to splice conductors, build up dielectric, splice the shield, and provide insulation.

Dimensions are shown for reference purposes only. Specifications subject to change.

Dimensions are in millimeters unless otherwise specified.

USA: +1 800 522 6752
Asia Pacific: +86 0 400 820 6015
UK: +44 800 267 666

For additional support numbers please visit www.te.com

SolderShield Shielded and Coaxial Cable Splices (Continued)

Product Characteristics

Materials	
Insulation sleeve	Radiation-crosslinked polyvinylidene fluoride
Meltable inserts	Fluorocarbon-based thermoplastic
MiniSeal crimp splice	Base metal: Copper alloy C10200 per ASTM B75 Plating: Tin per MIL-T-10727 or nickel per QQ-N-290
SolderShield shield splice	Base metal: Tin-plated copper wire braid per ASTM B3 Solder and flux coating: Type Sn63 Pb37. Flux: ROM1 per ANSI - J - STD - 004 (RA flux)

Parameter	Test Method	Requirement
Electromechanical Performance		
Dielectric strength (shield connection)	—	No breakdown or arcing at 1000 Vac (RMS)
Dielectric strength (conductor connection)	—	2.5 kV
Voltage drop	MIL-S-81824	Less than 2.0-millivolt increase
Insulation resistance (shield connection)	—	1000 megohms minimum at 500 Vdc
Insulation resistance (conductor connection)	—	5000 megohms
Tensile strength for MiniSeal	MIL-S-81824	Exceed yield strength (pounds) of wire.
Tensile strength for SolderShield	MIL-S-81824	75% of strength (pounds) of unspliced cable
Temperature rating	—	-55°C to 150°C [-67°F to 302°F]
Environmental Resistance		
Salt spray	MIL-STD-202 M101	Meet voltage drop requirement.
Heat aging	750 hours at 150°C [302°F]	Meet all electromechanical requirements.
Temperature cycling	MIL-STD-202 M107C	Meet all electromechanical requirements.
Altitude immersion	Immersion at 22,860m [75,000 ft]	Meet insulation-resistance requirement.
Corrosion resistance	—	No evidence of corrosion after testing in accordance with MIL-STD-202, Method 101, Test Condition A

Raychem C-Wrap Side Entry Repair Sleeve

Product Facts

- **150°C rated**
- **Easy to install: saves time, man power and cost**
- **Color-coded to ensure proper sizing for each application**
- **Long term performance provides a permanent repair**
- **Low profile (small diameter and short length)**
- **Side Entry for easy access to damaged wire**
- **Wrap-around design eliminates de-pinning of connector for repair**

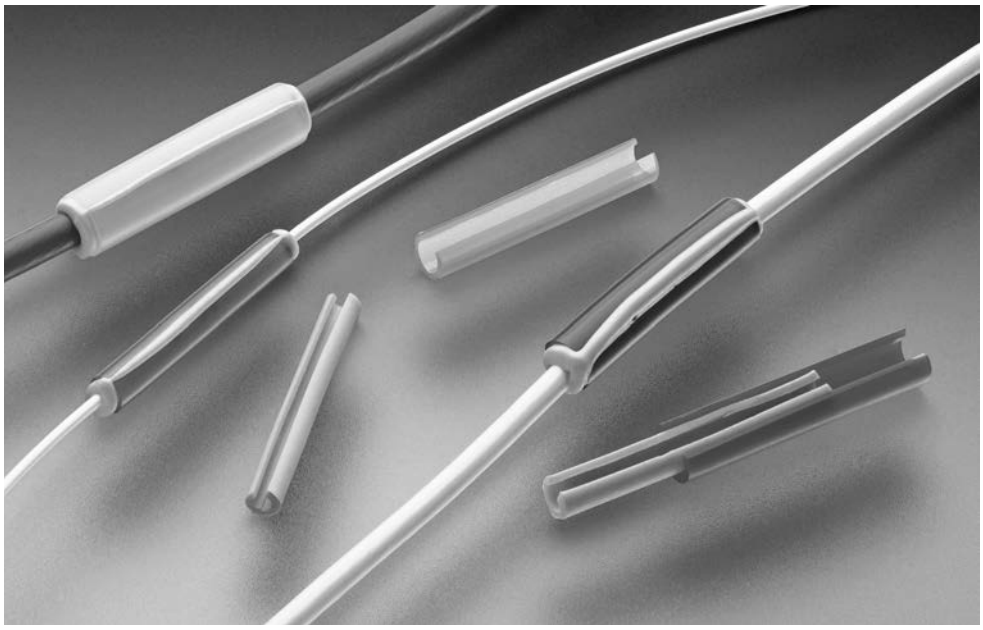

Description

TE Connectivity's C-Wrap side repair sleeve consists of two pieces; the outer tubing and an adhesive inner layer. It is a side-entry sleeve designed to repair and seal a damaged wire jacket that is either chafed or has a radial crack or cut on the insulation.

Applications

- Used as a side-entry repair kit
- Repair of nicks, chafed and radial cracks on the wire in most Aerospace, Defense and Marine applications
- Prevents galvanic corrosion on center conductor
- RoHS compliant

Materials

- Meltable adhesive — Modified thermoplastic fluroelastomer
- Insulation sleeve — Radiation cross-linked modified fluropolymer

Environmental

- Environmental resistant
- For use on insulations rated at 135˚C or higher
- Temperature range: -65˚C to +150˚C

Standards & Specs

- Meets fluid and sealing requirements called out in SAE-AS81824
- Product Specification: TE D-6201
- Installation Procedure: RPIP-1101

Application Tooling

- Steinel HL1910E or HL2010E General Purpose Hot-Air Tool
- Steinel HL1802E-074616 SolderSleeve Reflector for HL Tools
- Leister CV-198X Series
- M81969/8-08 (for D-150-C-11 & D-150-C-12) MIL spec installation tool
- M81969/8-10 (for D-150-C-13 & D-150-C-14) MIL spec installation tool

Dimensions are shown for reference purposes only. Specifications subject to change.

Dimensions are in millimeters unless otherwise specified.

USA: +1 800 522 6752
Asia Pacific: +86 0 400 820 6015
UK: +44 800 267 666

For additional support numbers please visit www.te.com

Raychem C-Wrap Side Entry Repair Sleeve (Continued)

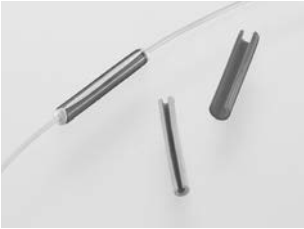

D-150-C-11
PN CX2001-000

D-150-C-12
PN CX2096-000

D-150-C-13
PN CX2097-000

D-150-C-14
PN CX2098-000

Customer Drawing

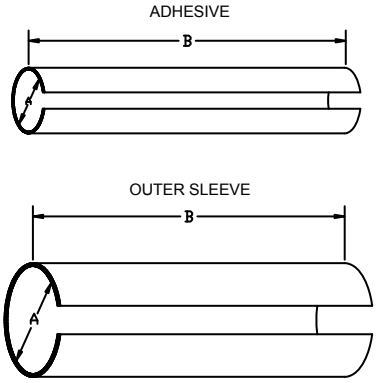

PART DESCRIPTION	COLOR CODE	PRODUCT DIMENSION				CONDUCTOR	
		I.D. (A)		Cut Length (B)		Wire O.D. (Note*)	
		Adhesive ± .05 (.002)	Sleeve ± .05 (.002)	Adhesive ± 1.5 (.06)	Sleeve ± .5 (.02)	Min	Max
D-150-C-11	Green	1.11 (.044)	2.29 (.090)	21.75 (.86)	19.05 (.75)	0.80 (.031)	1.10 (.043)
D-150-C-12	Red	1.68 (.066)	2.74 (.108)	21.75 (.86)	19.05 (.75)	1.10 (.043)	1.50 (.059)
D-150-C-13	Blue	2.13 (.084)	3.43 (.135)	21.75 (.86)	19.05 (.75)	1.50 (.059)	2.30 (.090)
D-150-C-14	Yellow	3.34 (.133)	4.80 (.189)	21.75 (.86)	19.05 (.75)	2.30 (.090)	2.80 (.110)

MATERIALS:
1. MELTABLE ADHESIVES: Environment resistant modified thermoplastic fluoroelastomer. Color coded.
2. OUTER SLEEVE: Heat-shrinkable, transparent, radiation cross-linked modified fluoropolymer. Color coded.

APPLICATION:
1. These parts are designed to provide an environment resistant to repair damaged primary wire that have a radial crack up to 360 degrees, nicks/scrapes not longer than 1/4" on the insulation rated for 135˚C minimum and no damage to wire conductor. For insulation procedures, refer to RPIP 1101.
2. Install using TE approved convection or infrared heating tools in accordance with TE. When installed with approved convection or infrared heating tools, assemblies will meet the performance requirements of TE D-6201 specification. Infrared tools are not recommended for use with black cable jackets.
3. Temperature range: -65˚C to +180˚C. Product will withstand continuous temperature of 150˚C for a period of 500 hours, and continuous temperature of 180˚C for a period of 168 hours.

NOTE*: If the O.D. of the wire is out of the range that is specified in the Table, use the next size of C-Wrap up or down.

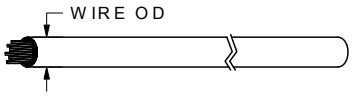

Introduction

TE SolderTacts shielded contacts are designed to provide reliable, one-piece solder terminations for use with circular and rectangular connectors. These controlled soldering contacts help speed installation and reduce installed costs while eliminating the variables associated with hard-to-handle crimped terminations.

With TE's controlled soldering technology, the connections typically exceed the strength of the wire. Transparent insulation and inspection windows permit fully inspectable terminations.

SolderTacts products are available to terminate coaxial cable and twisted wire pairs in both military and commercial applications.

Dimensions are shown for reference purposes only. Specifications subject to change.

Dimensions are in millimeters unless otherwise specified.

USA: +1 800 522 6752
Asia Pacific: +86 0 400 820 6015
UK: +44 800 267 666

For additional support numbers please visit www.te.com

SolderTacts Shielded One-Piece Solder Contacts

Product Facts

- **Reliable one-piece solder contacts: through-connector shielding reduces cross-talk, and improves signal transmission**
- **One-step installation**
- **Solder joints are strong and reliable**
- **Terminations are fully inspectable**
- **Termination for coax cables, shielded wires, twisted pairs, triaxial cables, for a variety of commercial and military connectors**

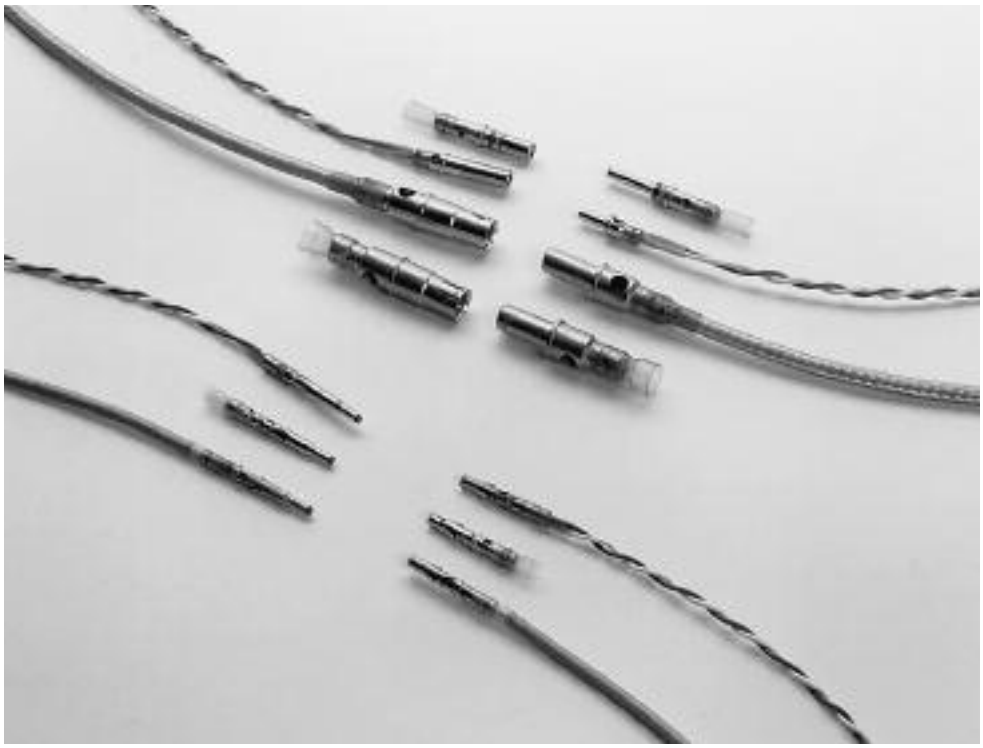

Applications

One-piece controlled-soldering SolderTacts contacts connectors are designed to terminate coaxial cables, shielded wires, and twisted pairs faster and more reliably than any other method. SolderTacts contacts eliminate the variables associated with hard-to-handle crimping. Their one-step installation accelerates production while reducing handling and installed costs.

Controlled Soldering

SolderTacts contacts provide the optimum amount and type of solder and flux in prefluxed solder preforms to control soldering and reduce operator sensitivity. The geometry of the coaxial cable is carried through the connector to eliminate separate pins, help reduce cross talk, and improve shielding effectiveness and signal transmission.

SolderTacts contacts provide simultaneous electrical connection and strain relief. Heat-shrinkable tubing insulations eliminate stress concentration on the wire within the contact. Because the insulation is transparent and inspection windows are provided, terminations are fully inspectable.

Compatibility

The design versatility of SolderTacts contacts makes them exceptionally well suited to military applications, along with commercial aerospace, instrumentation and computers. SolderTacts products are compatible with most standard connector cavities. SolderTacts contacts are intermateable and intermountable with contacts qualified to the indicated specification.

SolderTacts shielded contacts can be terminated with standard TE heating tools. Once terminated, they can be installed into connector cavities with standard insertion and extraction tools. They are replaceable without cutting and restripping or shortening the cable.

Specifications/Approvals

Series	TE
D-602	D-6002

Available in:	
Americas	■
Europe	■
Asia Pacific	■

Catalog 1654025
Revised 3-13

www.te.com

Dimensions are shown for reference purposes only. Specifications subject to change.

Dimensions are in millimeters unless otherwise specified.

USA: +1 800 522 6752
Asia Pacific: +86 0 400 820 6015
UK: +44 800 267 666

For additional support numbers please visit www.te.com

SolderTacts Shielded One-Piece Solder Contacts (Continued)

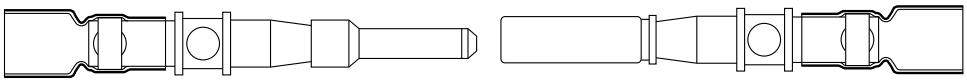

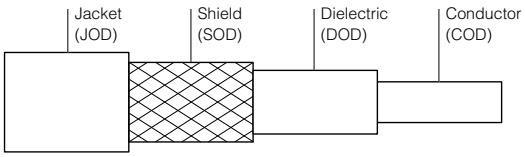

SolderTacts Product Construction, MIL-C-26482 Series

SolderTacts Series: MIL-C-26482

Contact Military Specification	Cable Diameter				Wire (AWG)	TE SolderTacts Part No.	Size	Polarity	Cable Type
	JOD	SOD	DOD	COD					
MIS-20067/5-001†	1.78–4.70 [.070–.185]	1.65–2.79 [.065–.110]	.76–2.03 [.030–.080]	.23–.51 [.009–.020]	24–32	D-602-16	12	S	Coaxial
MIS-20067/6-001†	1.78–4.70 [.070–.185]	1.65–2.79 [.065–.110]	.76–2.03 [.030–.080]	.23–.51 [.009–.020]	24–32	D-602-17	12	P	Coaxial
—	1.52–3.30 [.060–.130]	1.68–2.13 [.066–.089]	.91–1.75 [.036–.069]	.30–.66 [.012–.026]	24–30	D-602-46	16	P	Coaxial
—	1.52–3.30 [.060–.130]	1.68–2.13 [.066–.089]	.91–1.75 [.036–.069]	.30–.66 [.012–.026]	26–32	D-602-47	16	S	Coaxial
—	—	—	.76–1.24 [.030–.049]	.28–.79 [.011–.031]	24–30	D-602-56	16	P	Twinax
—	—	—	.76–1.24 [.030–.049]	.28–.79 [.011–.031]	24–30	D-602-57	16	S	Twinax

†These SolderTacts contacts are on qualified parts list for indicated specification.

Tooling Selection Guide

Part Numbers	Engineering Standard (Termination Instructions)	Convection (Hot Air) Heating AT-1319 Adapter	Repair Wand	Contact Insertion Tool	Contact Removal Tool
D-602-46/47	ES61137	AT-1319-17	*	AD-1525	AD-1526
D-602-56/57	ES61138	—	—	(M81969/17-04)	(M81969/19-08)
D-602-16/17	ES61161	—	—	—	—

*Could be developed.

Note:
AA-400 SuperHeater Compressed Air Heating Tool shown on page 10-2 can be used for installation. Another option is the Steinel® General Purpose Hot-Air Heating Tool shown on page 10-13.

Dimensions are shown for reference purposes only. Specifications subject to change.

Dimensions are in millimeters unless otherwise specified.

USA: +1 800 522 6752
Asia Pacific: +86 0 400 820 6015
UK: +44 800 267 666

For additional support numbers please visit www.te.com

SolderTacts Shielded One-Piece Solder Contacts (Continued)

SolderTacts Series: MIL-C-28748 Series

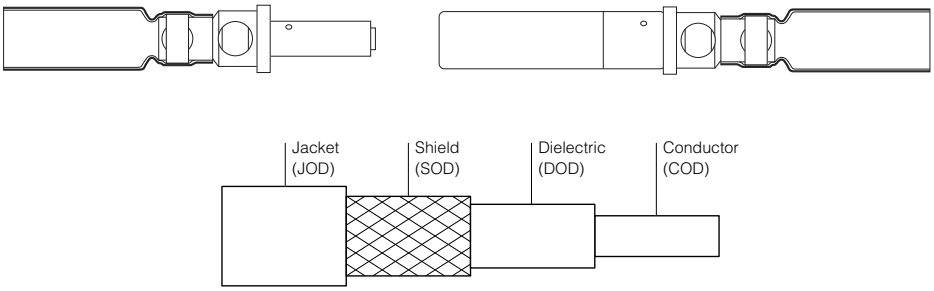

SolderTacts product construction, MIL-C-28748 Series

Contact Military Specification	Cable Diameter				Wire (AWG)	TE SolderTacts Part No.	Size	Polarity	Cable Type
	JOD	SOD	DOD	COD					
MIS-20067/2-002[a]	1.52–3.35 [.060-.132]	1.68–2.13 [.066-.084]	.91–1.78 [.036-.070]	.23–.89 [.009-.035]	26–32	D-602-44	16	P	Coaxial
MIS-20067/1-001[a]	1.52–3.35 [.060-.132]	1.68–2.13 [.066-.084]	.91–1.78 [.036-.070]	.23–.89 [.009-.035]	26–32	D-602-45	16	S	Coaxial
MIS-20067/4-001[a]	—	—	.76–1.24 [.030-.049]	.28–.79 [.011-.031]	24–30	D-602-54	16	P	Twisted pair
MIS-20067/3-001[a]	—	—	.76–1.24 [.030-.049]	.28–.79 [.011-.031]	24–30	D-602-55	16	S	Twisted pair
M39029/79[b]	1.52–3.35 [.060-.132]	1.68–2.13 [.066-.084]	.91–1.68 [.036-.066]	.30–.66 [.012-.026]	26–32	D-602-72	16	P	Coaxial
M39029/80[b]	1.52–3.35 [.060-.132]	1.68–2.13 [.066-.084]	.91–1.68 [.036-.066]	.30–.66 [.012-.026]	26–32	D-602-73	16	S	Coaxial
M39029/40[b]	1.52–3.35 [.060-.132]	1.68–2.13 [.066-.084]	.91–1.68 [.036-.066]	.30–.66 [.012-.026]	26–32	D-602-76	16	P	Coaxial
M39029/41[b]	1.52–3.35 [.060-.132]	1.68–2.13 [.066-.084]	.91–1.68 [.036-.066]	.30–.66 [.012-.026]	26–32	D-602-77	16	S	Coaxial
—	—	—	.76–1.24 [.030-.049]	.28–.79 [.011-.031]	24–30	D-602-0126	16	P	Twisted pair[c]
—	—	—	.76–1.24 [.030-.049]	.28–.79 [.011-.031]	24–30	D-602-0127	16	S	Twisted pair[c]
—	1.52–3.35 [.060-.132]	1.68–2.13 [.066-.084]	.91–1.78 [.036-.070]	.23–.46 [.009-.018]	28–32	D-602-0172	16	P	Coaxial
MIS-20067/2-001, 003[a]	1.52–3.35 [.060-.132]	1.68–2.13 [.066-.084]	.91–1.78 [.036-.070]	.23–.46 [.009-.018]	28–32	D-602-0173	16	S	Coaxial
MIS-20067/8-001[a]	—	—	1.40–3.15 [.055-.124]	.64–1.57 [.025-.062]	16–20	D-610-09	16	P	Power
MIS-20067/7-001[a]	—	—	1.40–3.15 [.055-.124]	.64–1.57 [.025-.062]	16–20	D-610-10	16	S	Power

a These SolderTacts contacts are on the qualified parts list for indicated specification.
b These SolderTacts contacts are intermateable and intermountable with contacts qualified to the indicated specification; they replace crimp-style termination.
c These SolderTacts contacts are designed for twisted-pair cable per MIL-STD-1553B.

Dimensions are shown for reference purposes only. Specifications subject to change.

Dimensions are in millimeters unless otherwise specified.

USA: +1 800 522 6752
Asia Pacific: +86 0 400 820 6015
UK: +44 800 267 666

For additional support numbers please visit www.te.com

SolderTacts Shielded One-Piece Solder Contacts (Continued)

Tooling Selection Guide: MIL-C-28748 Series

SolderTacts Series	Part No.	Engineering Standard (Termination Instructions)	Convection (Hot Air) Heating	
			AT-1319 Adapter	Repair Wand
748	D-602-44/45	ES61133	AT-1319-14	AD-1480
	D-602-0172/0173	ES61240	—	—
	D-602-54/55	ES61132	—	—
	D-602-0126/0127	ES61199	—	—
	D-610-09/10	ES61187	AT-1319-15	AD-1571
	D-602-72/73	ES61135	AT-1319-18	AD-1486
	D-602-76/77	ES61164	AT-1319-20	AD-1554

SolderTacts Series	Contact Insertion Tool	Contact Removal Tool		Special Tools
748	*	AD-1447	AD-1457A (bushing tool)	AD-1464 (flex tip removal tool)

*Not applicable.

Note:
AA-400 SuperHeater Compressed Air Heating Tool shown on page 10-2 can be used for installation. Another option is the Steinel® General Purpose Hot-Air Heating Tool shown on page 10-13.

Dimensions are shown for reference purposes only. Specifications subject to change.

Dimensions are in millimeters unless otherwise specified.

USA: +1 800 522 6752
Asia Pacific: +86 0 400 820 6015
UK: +44 800 267 666

For additional support numbers please visit www.te.com

SolderTacts Shielded One-Piece Solder Contacts (Continued)

SolderTacts Series: MIL-C-38999, Series I, II, III, IV Circular Connectors

SolderTacts Product Construction, MIL-C-38999 Series

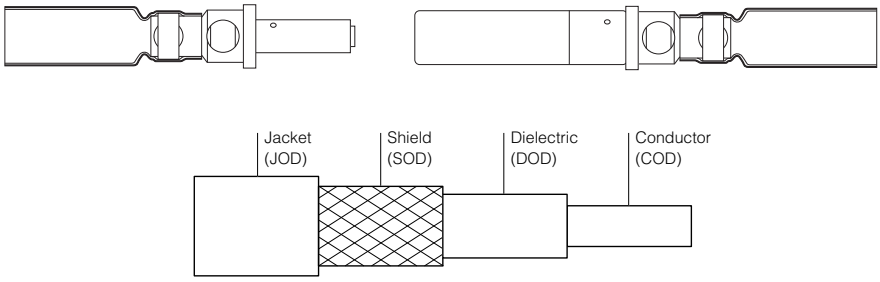

Contact Military Specification	United States Air Force Drawing No.	Cable Diameter JOD	SOD	DOD	COD	Wire (AWG)	TE SolderTacts Part Number	Size	Polarity	Cable Type
Series I, III, and IV										
M39029/60[a]	—	3.81–5.94 [.150-.234]	3.10–4.32 [.150-.170]	1.52–3.84 [.060-.151]	.48–1.09 [.019-.043]	22–24	D-602-0122	8	P	Coaxial
M39029/59[a]	—	3.81–5.94 [.150-.234]	3.10–4.32 [.150-.170]	1.52–3.84 [.060-.151]	.48–1.09 [.019-.043]	22–24	D-602-0123	8	S	Coaxial
M39029/76[a]	915304-1	1.27–2.62 [.050-.103]	1.68–2.13 [.066-.084]	.91–1.73 [.036-.068]	.23–.58 [.009-.023]	26–30	D-602-0140	16	P	Coaxial
M39029/77[a]	915305-1	1.27–2.62 [.050-.103]	1.68–2.13 [.066-.084]	.91–1.73 [.036-.068]	.23–.58 [.009-.023]	26–30	D-602-0141	16	S	Coaxial
M39029/76[a]	915304-2	—	—	.64–1.09 [.025-.043]	.23–.58 [.009-.023]	26–30	D-602-0142	16	P	Twisted pair
M39029/77[a]	915305-2	—	—	.64–1.09 [.025-.043]	.23–.58 [.009-.023]	26–30	D-602-0143	16	S	Twisted pair
M39029/28[a]	915307-1	1.47–3.10 [.058-.122]	1.68–2.39 [.066-.094]	1.12–2.03 [.044-.080]	.48–.89 [.019-.035]	24–32	D-602-0144	12	P	Coaxial
M39029/75[a]	915308-1	1.47–3.10 [.058-.122]	1.68–2.39 [.066-.094]	1.12–2.03 [.044-.080]	.48–.89 [.019-.035]	24–32	D-602-0145	12	S	Coaxial
M39029/28[a]	915307-3	—	—	.74–1.45 [.029-.057]	.48–.89 [.019-.035]	22–26	D-602-0146	12	P	Twisted pair
M39029/75[a]	915308-3	—	—	.74–1.45 [.029-.057]	.48–.89 [.019-.035]	22–26	D-602-0147	12	S	Twisted pair
M39029/28[a]	915307-2	1.90–3.81 [.075-.150]	2.54–2.97 [.100-.117]	1.27–2.62 [.050-.103]	.48–.89 [.019-.035]	22, 28	D-602-0150	12	P	Coaxial
M39029/75[a]	915308-2	1.90–3.81 [.075-.150]	2.54–2.97 [.100-.117]	1.27–2.62 [.050-.103]	.48–.89 [.019-.035]	22, 28	D-602-0151	12	S	Coaxial
—	8340712-OS-01	2.49–3.42 [.098-.135]	1.68–3.05 [.066-.120]	.76–1.24 [.030-.049]	.27–.79 [.011-.031]	24–26	D-602-1108	8	S	Twisted pair[b]
—	8340713-OS-01	2.49–3.42 [.098-.135]	1.68–3.05 [.066-.120]	.76–1.24 [.030-.049]	.27–.79 [.011-.031]	24–26	D-602-1109	8	P	Twisted pair[b]
—	—	2.49–3.76 [.098-.148]	1.68–3.30 [.066-.130]	.91–1.78 [.036-.070]	.23–.89 [.009-.035]	22–26	D-602-1110	8	S	Triaxial
—	—	2.49–3.76 [.098-.148]	1.68–3.30 [.066-.130]	.91–1.78 [.036-.070]	.23–.89 [.009-.035]	22–26	D-602-1111	8	P	Triaxial
—	8340712-OL-01	2.49–3.42 [.098-.135]	1.68–3.05 [.066-.120]	.76–1.24 [.030-.049]	.27–.79 [.011-.031]	24–26	D-602-1112	8	S	Twisted pair[b]
—	8340713-OL-01	2.49–3.42 [.098-.135]	1.68–3.05 [.066-.120]	.76–1.24 [.030-.049]	.27–.79 [.011-.031]	24–26	D-602-1113	8	P	Twisted pair[b]
M39029/90[a]	8912020-OS-01	3.68 [.145] Max.	—	.64–1.29 [.029-.051]	.27–.74 [.011-.029]	24–26	DK-602-0156-N-1	8	P	Twinaxial[c]
M39029/90[a]	8912020-DL-01	4.11 [.162] Max.	—	.64–1.29 [.029-.051]	.27–.74 [.011-.029]	24–26	DK-602-0156-N-2	8	P	Twinaxial[c]

a These SolderTacts contacts are intermateable and intermountable with contacts qualified to indicated specification; they replace crimp-style termination.
b These SolderTacts contacts are designed for shielded twisted pair cable per MIL-STD-1553B.
c These SolderTacts contacts are designed for databus contacts per MIL-STD-1553B.

Dimensions are shown for reference purposes only. Specifications subject to change.

Dimensions are in millimeters unless otherwise specified.

USA: +1 800 522 6752
Asia Pacific: +86 0 400 820 6015
UK: +44 800 267 666

For additional support numbers please visit www.te.com

SolderTacts Shielded One-Piece Solder Contacts (Continued)

SolderTacts Series: MIL-C-38999, Series I, II, III, IV Circular Connectors
(Continued)

Contact Military Specification	United States Air Force Drawing No.	Cable Diameter (in inches)				Wire (AWG)	TE SolderTacts Part Number	Size	Polarity	Cable Type
		JOD	SOD	DOD	COD					
Series I, III, and IV										
M39029/90[a]	8912020-EL-01	4.50 max. [.177]	—	.74-1.30 [.029–.051]	.24-.74 [.011–.029]	24–26	DK-602-0156-N-3	8	P	Twinaxial[c]
M39029/91[a]	8912019-OS-01	3.68 max. [.145]	—	.74-1.30 [.029–.051]	.24-.74 [.011–.029]	24–26	DK-602-0157-N-1	8	S	Twinaxial[c]
M39029/91[a]	8912019-DL-01	4.12 max. [.162]	—	.74-1.30 [.029–.051]	.24-.74 [.011–.029]	24–26	DK-602-0157-N-2	8	S	Twinaxial[c]
M39029/91[a]	8912019-EL-01	4.50 max. [.177]	—	.74-1.30 [.029–.051]	.24-.74 [.011–.029]	24–26	DK-602-0157-N-3	8	S	Twinaxial[c]
M39029/90[a]	8912020-OL-01	4.67 max. [.184]	—	—	—	20	DK-602-0169-1	8	P	Twinaxial[c]
M39029/91[a]	8912019-OL-01	4.67 max. [.184]	—	—	—	20	DK-602-0170-1	8	S	Twinaxial[c]
Series II										
M39029/76[a]	915304-1	1.27-2.62 [.050–.103]	1.68-2.13 [.066–.084]	.91-1.73 [.036–.068]	.23-.58 [.009–.023]	26–30	D-602-0140	16	P	Coaxial
M39029/77[a]	915306-1	1.27-2.62 [.050–.103]	1.68-2.13 [.066–.084]	.91-1.73 [.036–.068]	.23-.58 [.009–.023]	26–30	D-602-0171	16	S	Coaxial
M39029/76[a]	915304-2	—	—	.64-1.09 [.025–.043]	.23-.58 [.009–.023]	26–30	D-602-0142	16	P	Twisted pair
M39029/77[a]	915306-2	—	—	.64-1.07 [.025–.042]	.23-.58 [.009–.023]	26–30	D-602-0174	16	S	Twisted pair

a These SolderTacts contacts are intermateable and intermountable with contacts qualified to indicated specification; they replace crimp-style termination.
b These SolderTacts contacts are designed for shielded twisted pair cable per MIL-STD-1553B.
c These SolderTacts contacts are designed for databus contacts per MIL-STD-1553B.

Tooling Selection Guide

SolderTacts Series	Part Numbers (D-602-)	Engineering Standard (Termination Instructions)	Convection (Hot Air) Heating AT-1319 Adapter	Repair Wand	Contact Insertion Tool	Contact Removal Tool*
999 Size 16	0140/0141	ES61226	AT-1319-78	AD-1565	M81969/8-07 or M81969/14-03	M81869/8-08 or M81969/14-03
	0142/0143	ES61224	—	—		
	0171	ES61226	AT-1319-27	AD-1572		
	0174	ES61224	—	—		
999 Size 12	0144/0145	ES61206	AT-1319-24	AD-1566	M81969/8-09 or M81969/14-04	M81969/8-10 or M81969/14-04
	0146/0147	ES61218	—	—		
	0150/0151	ES61223	—	—		
999 Size 8	0122/0123	ES61179	AT-1319-22	AD-1568	—	M81969/14-06 or Astro ATBX-2277
	1108/1109	ES61172	AT-1319-22 and AT-1319-14	—		
	1110/1111	ES61172		AD-1568 and AD-1480		
	1112/1113	ES61184				
	0156/0157-X	ES61231				
	0169/0170-X	ES61235				

*TE does not provide this tool. See connector manufacturer.

Note:
AA-400 SuperHeater Compressed Air Heating Tool shown on page 10-2 can be used for installation. Another option is the Steinel® General Purpose Hot-Air Heating Tool shown on page 10-13.

Dimensions are shown for reference purposes only. Specifications subject to change.

Dimensions are in millimeters unless otherwise specified.

USA: +1 800 522 6752
Asia Pacific: +86 0 400 820 6015
UK: +44 800 267 666

For additional support numbers please visit www.te.com

SolderTacts Shielded One-Piece Solder Contacts (Continued)

SolderTacts Series: Subminiature*

SolderTacts Product Construction, Submin Series

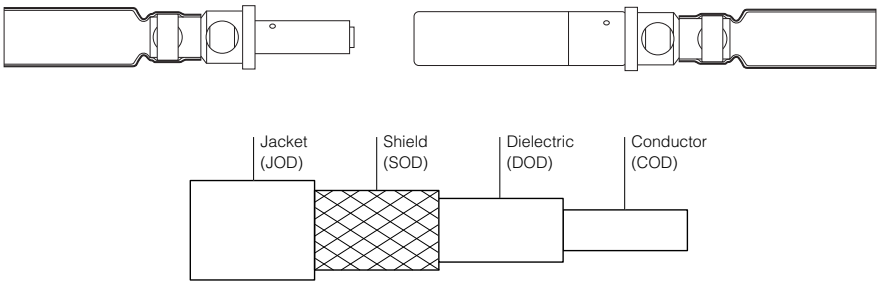

Cable Diameter

SolderTacts	Size	Polarity	Cable Type	Cable Diameter				
				JOD	SOD	DOD	COD	(AWG)
D-602-0278	16	P	Coaxial	1.52–2.92 [.060-.115]	1.85–2.18 [.073-.086]	.64–1.91 [.025-.075]	.23–.74 [.009-.029]	24–32
D-602-0279	16	S	Coaxial	1.52–2.92 [.060-.115]	1.85–2.18 [.073-.086]	.64–1.91 [.025-.075]	.23–.74 [.009-.029]	24–32
D-602-0288	16	P	Twisted pair	—	—	.74–1.40 [.029-.055]	.23–.74 [.009-.029]	24–32
D-602-0289	16	S	Twisted pair	—	—	.74–1.40 [.029-.055]	.23–.74 [.009-.029]	24–32

*These SolderTacts contacts belong to the TE “Subminiature” series of contacts, which are designed for use in commercial connectors.

Tooling Selection Guide

SolderTacts Series	Part Numbers (D-602-)	Engineering Standard (Termination Instructions)	Convection (hot air) Heating AT-1319 Adapter	Repair Wand	Contact Insertion Tool	Contact Removal Tool
Submin	0278/0279	ES61170	AT-1319-12	AD-1481	*	AD-1447
—	0288/0289	ES61414	—	—	—	—

*Not applicable.

Note:
AA-400 SuperHeater Compressed Air Heating Tool shown on page 10-2 can be used for installation. Another option is the Steinel® General Purpose Hot-Air Heating Tool shown on page 10-13.

SolderTacts Shielded One-Piece Solder Contacts (Continued)

SolderTacts Series: MIL-C-83723

Contact Military Specification*	Cable Diameter				Wire (AWG)	TE SolderTacts	Size	Polarity	Cable Type
	JOD	SOD	DOD	COD					
M39029/74-400	2.39–3.56 [.094-.140]	1.96–2.49 [.077-.098]	1.32–2.06 [.052-.081]	.28–.74 [.011-.029]	24–32	D-602-0094	12	P	Coaxial
M39029/73-397	2.39–3.56 [.094-.140]	1.96–2.49 [.077-.098]	1.32–2.06 [.052-.081]	.28–.74 [.011-.029]	24–32	D-602-0095	12	S	Coaxial
M39029/74-401	—	—	.74–1.45 [.029-.057]	.28–.74 [.011-.029]	24–32	D-602-0104	12	P	Twisted pair
M39029/73-398	—	—	.74–1.45 [.029-.057]	.28–.74 [.011-.029]	24–32	D-602-0105	12	S	Twisted pair
M39029/74-399	3.05–3.68 [.120-.145]	3.10–3.15 [.122-.124]	2.36–2.67 [.093-.105]	.28–.74 [.011-.029]	24–32	D-602-0106	12	P	Large coaxial
M39029/73-396	3.05–3.68 [.120-.145]	3.10–3.15 [.122-.124]	2.36–2.67 [.093-.105]	.28–.74 [.011-.029]	24–32	D-602-0107	12	S	Large coaxial

* These SolderTacts contacts are on qualified parts list for indicated specification.

Tooling Selection Guide

TE SolderTacts Part Number	Engineering Standard (Termination Instructions)	Convection (Hot Air) Heating AT-1319 Adapter	Repair Wand	Contact Insertion Tool	Contact Removal Tool	Special Tools
D-602-0094/0095	ES61128	AT-1319-19	AD-1494	AD-1527	AD-1527	AD-1496
D-602-0106/0107	ES61134	Rev. D	Rev. C	(M81969/14-04)	(M81969/14-04)	(twisted)
D-602-0104/0105	ES61129	—	—	—	—	—

Note:
AA-400 SuperHeater Compressed Air Heating Tool shown on page 10-2 can be used for installation. Another option is the Steinel® General Purpose Hot-Air Heating Tool shown on page 10-13.

SolderTacts Series: DOD-C-83527

SolderTacts Reference	Size	Polarity	Cable Type	Contact Military Specification
D-602-0185	16	socket	Coaxial	—
D-602-0094	12	pin	Coaxial	M39029/74
D-602-0093*	12	socket	Coaxial	M39029/73
D-602-0106	12	pin	Coax (large)	M39029/74
D-602-0189*	12	socket	Coax (large)	M39029/73

*These SolderTacts contacts are intermateable with M39029/73, but are not on QPL.

SolderTacts Series: DOD-C-83527 (data bus contacts)**

SolderTacts Reference	Size	Polarity	Cable Type	Contact Military Specification
D-602-0186	8	pin	Twisted pair	M39029/96
D-602-0187	8	socket	Twisted pair	M39029/95
DK-602-0186-2	8	pin	Sh. twisted pair	M39029/96
DK-602-0187-2	8	socket	Sh. twisted pair	M39029/95

** These SolderTacts contacts are designed for shielded twisted pair cable per MIL-STD-1553B.

Dimensions are shown for reference purposes only. Specifications subject to change.

Dimensions are in millimeters unless otherwise specified.

USA: +1 800 522 6752
Asia Pacific: +86 0 400 820 6015
UK: +44 800 267 666

For additional support numbers please visit www.te.com

SolderTacts Shielded One-Piece Solder Contacts (Continued)

SolderTacts Series: Grommets

SolderTacts Reference	Size	Polarity
D-600-0071	—	For shielded twisted pair
D-600-0116	For size 8 DOD-C-83527 series	—
D-600-0125	For size 8 MIL-C-38999 series, for twisted pair	—

Performance

The performance of SolderTacts contacts is defined by the applicable TE specification control drawing (SCD) and TE Specification D-6002. Products on qualified product lists meet the requirements of the base specification.

Termination

Termination of SolderTacts contacts is defined in the appropriate TE Engineering Standard. To obtain a copy, contact TE.

Dimensions are shown for reference purposes only. Specifications subject to change.

Dimensions are in millimeters unless otherwise specified.

USA: +1 800 522 6752
Asia Pacific: +86 0 400 820 6015
UK: +44 800 267 666

For additional support numbers please visit www.te.com

Introduction

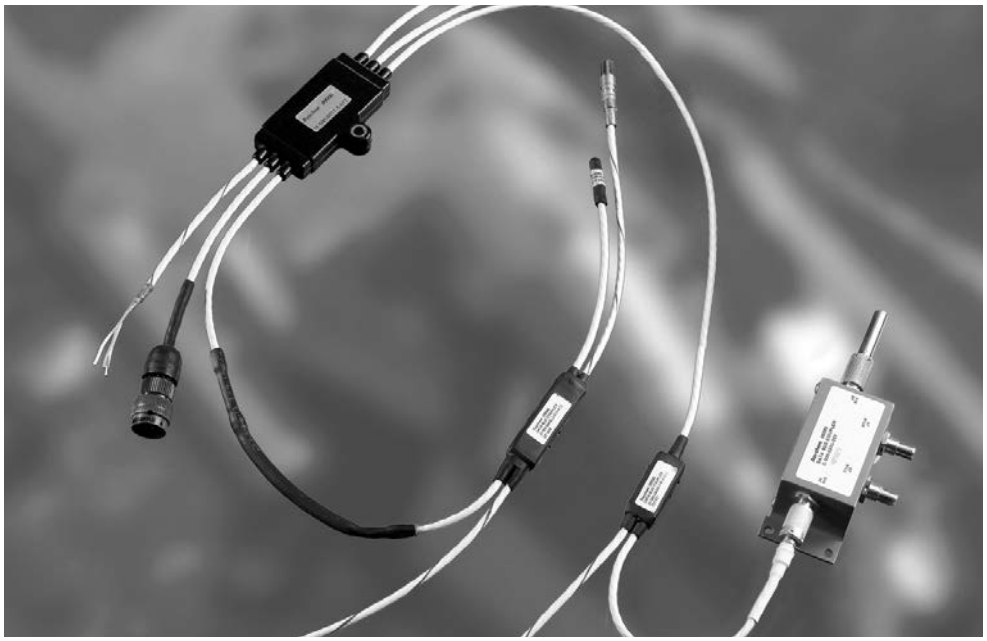

The full line of TE data bus products offers a complete system of interconnection hardware for all MIL-STD-1553B multiplexing needs.

Available components include:

- Couplers (micro's, boxes, flat packs)
- Data bus cables
- Triax connectors and contacts with strain relief
- One-piece triaxial contacts for MIL-C-38999 connectors (size 8 cavity)
- Bus and stub terminators
- Cable marker sleeves (TMS)
- Lightweight couplers
- Space components
- Harness design (Harn*Ware* software)

All TE brand data bus components offer:

- High packaging density and weight savings
- Design flexibility
- High performance (to 150°C [302°F] rating)

MIL-STD-1553B data bus components are also specified in the Air Force drawings listed in Air Force Drawing 8340707.

TE also supplies complete data bus networks in accordance with customer harness drawings. Using factory-built harnesses eliminates unnecessary splices and connectors, reducing the cost and increasing the reliability of the networks. Factory-built harnesses are pre-tested and ready for installation.

Dimensions are shown for reference purposes only. Specifications subject to change.

Dimensions are in millimeters unless otherwise specified.

USA: +1 800 522 6752
Asia Pacific: +86 0 400 820 6015
UK: +44 800 267 666

For additional support numbers please visit www.te.com

Cables

Product Facts

- Light weight
- Highly flexible
- Flame resistant
- Chemical resistant to all aircraft fluids
- Solder iron resistant
- Defined shielding performance

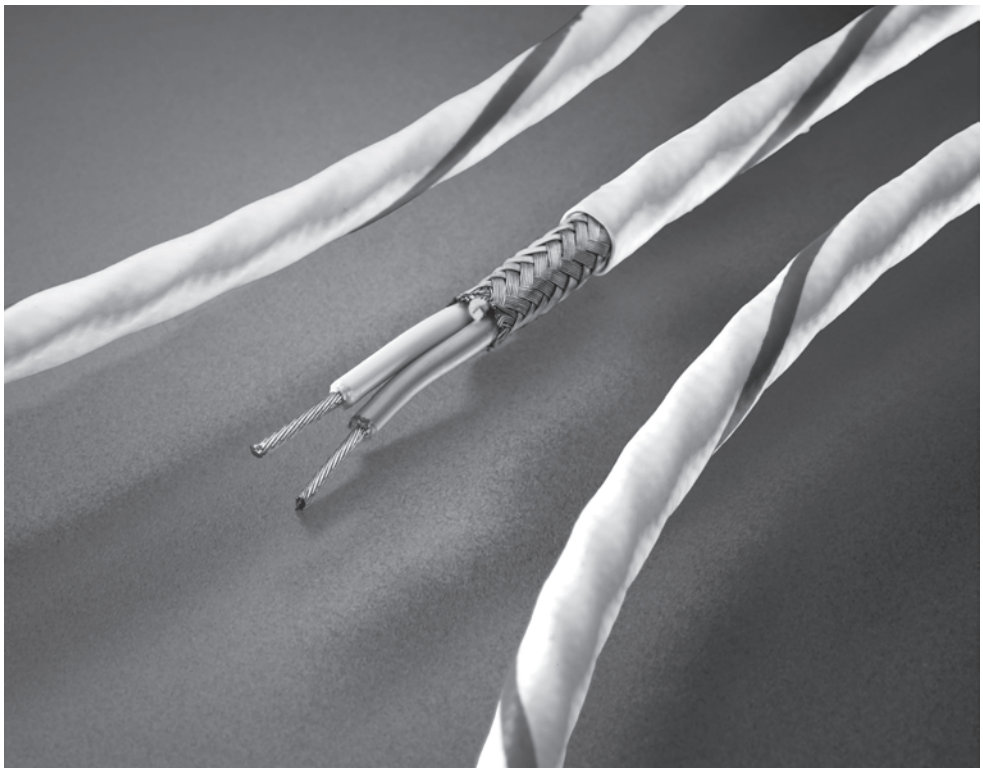

Applications

TE manufactures a line of SPEC 55 data bus cables that meet or exceed the performance requirements of MIL-STD-1553B.

SPEC 55 insulation is a high-temperature, radiation-crosslinked, modified ETFE material that can be used in wire constructions rated up to 200°C [392°F].

Note: TE will build harnesses with any customer specified cables and/or connectors.

Catalog 1654025
Revised 3-13

www.te.com

Dimensions are shown for reference purposes only. Specifications subject to change.

Dimensions are in millimeters unless otherwise specified.

USA: +1 800 522 6752
Asia Pacific: +86 0 400 820 6015
UK: +44 800 267 666

For additional support numbers please visit www.te.com

Cables (Continued)

Specifications/Approvals

Series	Military
SPEC 55 insulation	MIL-AS27500/32–/35 MIL-AS27500/41–/46

Product Selection

Cable Type		Part No.
24 AWG Single Optimized Shield		10612
24 AWG Double Optimized Shield		10613
24 AWG EMP Hardened		10614

In-Line Microcouplers: One- and Two-Stub

Product Facts

- Environmental sealing
- No connectors
- Very small size
- Light weight (1 stub: 10 g max.; 2 stubs: 15 g max.)
- In-line profile that makes wire bundle mounting possible
- 360° continuous low-impedance cable-shield terminations
- Reliable solder termination of all components
- Potted circuit elements for maximum durability and in-use reliability
- Ease of installation
- Altitude immersion resistance
- Optional eyelet configurations for bulkhead mounting
- Mean time between failures > 1,000,000 hours

Applications

The low-profile configuration of these couplers enables avionics system designers to plan for optimum coupler locations. Microcouplers are supplied with SPEC 55 data bus cables, including EMP-hardened versions. They are also available assembled with other components into a complete data bus harness.

Specifications/Approvals

Series	Military	TE
D-500-04	MIL-STD-1553B	D-6020

Available in:	
Americas	■
Europe	■
Asia Pacific	■

Catalog 1654025
Revised 3-13

www.te.com

Dimensions are shown for reference purposes only. Specifications subject to change.

Dimensions are in millimeters unless otherwise specified.

USA: +1 800 522 6752
Asia Pacific: +86 0 400 820 6015
UK: +44 800 267 666

For additional support numbers please visit www.te.com

In-Line Microcouplers: One- and Two-Stub (Continued)

Product Selection

Single Stub		Double Stub	
D-500-0455-1-YYY-ZZZ		D-500-0455-2-YYY-ZZZ	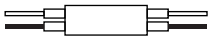
D-500-0465-1-YYY-ZZZ	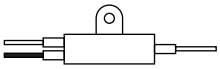	D-500-0465-2-YYY-ZZZ	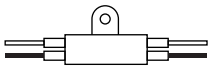
D-500-0456-1-YYY-ZZZ		D-500-0456-2-YYY-ZZZ	
D-500-0466-1-YYY-ZZZ	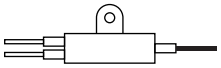	D-500-0466-2-YYY-ZZZ	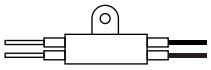
D-500-0457-1-YYY-ZZZ	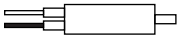	D-500-0457-2-YYY-ZZZ	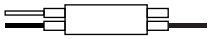
D-500-0467-1-YYY-ZZZ	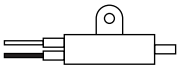	D-500-0467-2-YYY-ZZZ	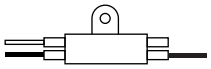
D-500-0458-1-YYY-ZZZ	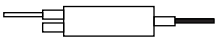	D-500-0458-2-YYY-ZZZ	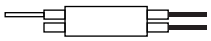
D-500-0468-1-YYY-ZZZ	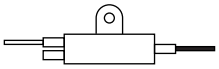	D-500-0468-2-YYY-ZZZ	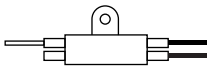

Note:
1. Bus cable
2. Stub cable

Dimensions are shown for reference purposes only. Specifications subject to change.

Dimensions are in millimeters unless otherwise specified.

USA: +1 800 522 6752
Asia Pacific: +86 0 400 820 6015
UK: +44 800 267 666

For additional support numbers please visit www.te.com

In-Line Microcouplers: One- and Two-Stub (Continued)

Microcoupler Part Numbering System

D-500-04W W-X-YYY-ZZZ

Standard Cable Length
012 = 12 in (1 ft)
078 = 78 in (6.5 ft)
079 = 79 in (2 m)
120 = 120 in (10 ft)
236 = 236 in (6 m)
240 = 240 in (20 ft)

Cable Type
612 = 10612 (24 AWG single optimized shield)
613 = 10613 (24 AWG double optimized shield)
614 = 10614 (24 AWG EMP hardened)

Number of Stubs
1 or 2

Design
5 = Without internal terminator
6 = Same as 5 but with reverse bus
7 = With internal terminator
8 = Same as 7 but with reverse bus

Boot
5 = Without mounting eyelet
6 = With mounting eyelet

Catalog 1654025
Revised 3-13

www.te.com

Dimensions are shown for reference purposes only. Specifications subject to change.

Dimensions are in millimeters unless otherwise specified.

USA: +1 800 522 6752
Asia Pacific: +86 0 400 820 6015
UK: +44 800 267 666

For additional support numbers please visit www.te.com

Ultra Lightweight In-Line Microcouplers 1- Through 6-Stub

Product Facts

- Environmental sealing
- No connectors
- Very small size
- Ultra Light weight (1 stub: 6.5 g max.; 2 stubs: 9.5 g max.)
- In-line profile that makes wire bundle mounting possible
- 360° continuous low-impedance cable-shield terminations
- Reliable solder termination of all components
- Potted circuit elements for maximum durability and in-use reliability
- Ease of installation
- Altitude immersion resistance
- Mean time between failures > 1,000,000 hours

Applications

Building on over 20 years of experience and continuous improvement in data bus, including pioneering in-line microcouplers, TE introduces a new family of ultra light-weight In-line micro-couplers, available in 1- through 6-stub configurations.

These couplers offer the same high performance and reliability as current microcouplers, but their weight is further reduced. They are available in configurations up to 6-stub, and to minimize weight; there is no option with a mounting eyelet.

Combined with TE 24 AWG or 26 AWG data bus cables, these ultra light couplers allow designers to significantly reduce weight.

They are also available assembled with other customer specified components into a complete factory-built and tested data bus harness.

Specifications/approvals

Series	Military	TE
D-500-L4xx	MIL-STD-1553B	D-6020 (same as current microcouplers)

Available in:	
Americas	■
Europe	■
Asia Pacific	■

Catalog 1654025
Revised 3-13

www.te.com

Dimensions are shown for reference purposes only. Specifications subject to change.

Dimensions are in millimeters unless otherwise specified.

USA: +1 800 522 6752
Asia Pacific: +86 0 400 820 6015
UK: +44 800 267 666

For additional support numbers please visit www.te.com

Lightweight In-Line Couplers Part Numbering System

D-500-L4 5 W -X -YYY -ZZZ

Cable Length
012 = 12 in 079 = 79 in 236 = 236 in
078 = 78 in 120 = 120 in 240 = 240 in

Cable Type
612 = 10612 (24 AWG single optimized shield)
613 = 10613 (24 AWG double optimized shield)
614 = 10614 (24 AWG EMP hardened)

Number of Stubs
1, 2, 3, 4, 5 or 6

Design
5 = Without internal terminator
6 = Same as 5 but with reverse bus
7 = With internal terminator
8 = Same as 7 but with reverse bus

Style
5 = Without eyelet

Catalog 1654025
Revised 3-13

www.te.com

Dimensions are shown for reference purposes only. Specifications subject to change.

Dimensions are in millimeters unless otherwise specified.

USA: +1 800 522 6752
Asia Pacific: +86 0 400 820 6015
UK: +44 800 267 666

For additional support numbers please visit www.te.com

Ultra Lightweight In-Line Microcouplers 1- Through 6-Stub (Continued)

Product Selection

D-500-L455-X-YYY-ZZZ

End View Left Side		End View Right Side
	1 stub	
	2 stub	
	3 stub	
	4 stub	
	5 stub	
	6 stub	

D-500-L456-X-YYY-ZZZ

End View Left Side		End View Right Side
	1 stub	
	2 stub	
	3 stub	
	4 stub	
	5 stub	
	6 stub	

D-500-L457-X-YYY-ZZZ

End View Left Side		End View Right Side
	1 stub	
	2 stub	
	3 stub	
	4 stub	
	5 stub	
	6 stub	

D-500-L458-X-YYY-ZZZ

End View Left Side		End View Right Side
	1 stub	
	2 stub	
	3 stub	
	4 stub	
	5 stub	
	6 stub	

Legend
Bus cable ○
Stub cable ●

Dimensions are shown for reference purposes only. Specifications subject to change.

Dimensions are in millimeters unless otherwise specified.

USA: +1 800 522 6752
Asia Pacific: +86 0 400 820 6015
UK: +44 800 267 666

For additional support numbers please visit www.te.com

Box Couplers

Product Facts

- **Light, robust coupler modules with connector versatility**
- **Up to eight stub connectors can be arrayed on the "face" of the box coupler. Bus connectors can also be on the "face" or on the "side" of the box**
- **Designed with TE brand D-621 series corrosion-resistant threaded-type or bayonet-type connectors**

Applications

The multiport capability of these couplers (up to eight stubs) enables avionics system designers to interconnect black boxes with minimum wire runs. Box couplers are supplied with triaxial threaded or bayonet connectors.

Note: TE also designs and manufactures customized data bus box couplers.

Specifications/Approvals

Series	Military	TE
D-500-0255	MIL-STD-1553	D-6021

Available in:

Americas	■
Europe	■
Asia Pacific	■

Catalog 1654025
Revised 3-13

www.te.com

Dimensions are shown for reference purposes only. Specifications subject to change.

Dimensions are in millimeters unless otherwise specified.

USA: +1 800 522 6752
Asia Pacific: +86 0 400 820 6015
UK: +44 800 267 666

For additional support numbers please visit www.te.com

Box Couplers (Continued)

Product Selection

Coupler Type	Part No.			
	Threaded	Bayonet A*	Bayonet B*	Bayonet C*
Face - 1 Stub	D-500-0255-511-1	D-500-0255-513-1	D-500-0255-515-1	D-500-0255-517-1
Face - 2 Stub	D-500-0255-521-1	D-500-0255-523-1	D-500-0255-525-1	D-500-0255-527-1
Face - 3 Stub	D-500-0255-531-1	D-500-0255-533-1	D-500-0255-535-1	D-500-0255-537-1
Face - 4 Stub	D-500-0255-541-1	D-500-0255-543-1	D-500-0255-545-1	D-500-0255-547-1
Face - 5 Stub	D-500-0255-551-1	D-500-0255-553-1	D-500-0255-555-1	D-500-0255-557-1
Face - 6 Stub	D-500-0255-561-1	D-500-0255-563-1	D-500-0255-565-1	D-500-0255-567-1
Face - 7 Stub	D-500-0255-571-1	D-500-0255-573-1	D-500-0255-575-1	D-500-0255-577-1
Face - 8 Stub	D-500-0255-581-1	D-500-0255-583-1	D-500-0255-585-1	D-500-0255-587-1
Side - 1 Stub	D-500-0255-512-1	D-500-0255-513-2	D-500-0255-515-2	D-500-0255-517-2
Side - 2 Stub	D-500-0255-522-1	D-500-0255-523-2	D-500-0255-525-2	D-500-0255-527-2
Side - 3 Stub	D-500-0255-532-1	D-500-0255-533-2	D-500-0255-535-2	D-500-0255-537-2
Side - 4 Stub	D-500-0255-542-1	D-500-0255-543-2	D-500-0255-545-2	D-500-0255-547-2
Side - 5 Stub	D-500-0255-552-1	D-500-0255-553-2	D-500-0255-555-2	D-500-0255-557-2
Side - 6 Stub	D-500-0255-562-1	D-500-0255-563-2	D-500-0255-565-2	D-500-0255-567-2
Side - 7 Stub	D-500-0255-572-1	D-500-0255-573-2	D-500-0255-575-2	D-500-0255-577-2
Side - 8 Stub	D-500-0255-582-1	D-500-0255-583-2	D-500-0255-585-2	D-500-0255-587-2

*The bayonet polarization listed is for the bus connector. All stub connectors are Bayonet D polarization. Polarizations are depicted as follows (jack view):

Dimensions are shown for reference purposes only. Specifications subject to change.

Dimensions are in millimeters unless otherwise specified.

USA: +1 800 522 6752
Asia Pacific: +86 0 400 820 6015
UK: +44 800 267 666

For additional support numbers please visit www.te.com

Discrete Connectors

Product Facts

- Compliance with MIL-STD-1553B hardware requirements
- Light weight
- Removable pin or socket contacts
- Termination with MIL-STD-1553B data bus cables, including EMP-hardened versions
- Continuous 360° shield coverage
- Rugged constructions
- Termination time of 1 to 2 minutes
- Inspectable solder terminations
- Low-skill assembly
- Reworkable and repairable terminations
- Strain relief built into the design
- Low-voltage drop and high reliability because of precisely controlled solder terminations
- Threaded and bayonet coupling styles
- Low total installed cost
- 1000-hour salt spray resistance
- Lower-cost connectors, for benchtop and mock-up

Applications

Designed specifically for MIL-STD-1553B data bus applications, the D-621 connector is intended to be a perfect match for the TE airworthy data bus cable. Together they provide durable, reliable, and reworkable interconnection hardware for the MIL-STD-1553B market.

Specifications/Approvals

Series	Military	TE
DK-621	MIL-STD-1553B	D-6025

Available in:	
Americas	■
Europe	■
Asia Pacific	■

Catalog 1654025
Revised 3-13

www.te.com

Dimensions are shown for reference purposes only. Specifications subject to change.

Dimensions are in millimeters unless otherwise specified.

USA: +1 800 522 6752
Asia Pacific: +86 0 400 820 6015
UK: +44 800 267 666

For additional support numbers please visit www.te.com

Discrete Connectors (Continued)

Connector Kit Part Numbering System

DK-621-04 XX-XX

Contact (supplied in DK-621 kits only)
P = Pin
S = Socket

Polarization (bayonet styles only) (jack view)

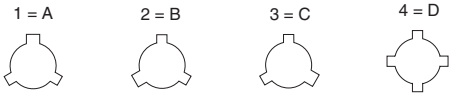

Basic Connector Configurations
Threaded styles
11 = Plug
12 = Jack
Bayonet styles
33 = Plug, A polarization
34 = Jack, A polarization
35 = Plug, B polarization
36 = Jack, B polarization
37 = Plug, C polarization
38 = Jack, C polarization
39 = Plug, D polarization
40 = Jack, D polarization

D-621 connector, kitted with accessories

Example:

DK-621-0434-1P = D-621 connector, kitted with accessories, jack bayonet style with A polarization and pin contact.

Catalog 1654025
Revised 3-13

www.te.com

Dimensions are shown for reference purposes only. Specifications subject to change.

Dimensions are in millimeters unless otherwise specified.

USA: +1 800 522 6752
Asia Pacific: +86 0 400 820 6015
UK: +44 800 267 666

For additional support numbers please visit www.te.com

Accessories

Product Facts

- **A single source for all harness components**
- **Products designed to work together**

Applications

TE manufactures all the products needed to build a MIL-STD-1553B data bus network. In addition to the main components (couplers, connectors, contacts, and cables), TE supplies the accessory components that may be necessary to complete a data bus system.

These include:

- Bus and stub terminators (spliced-in and connectorized D-621 series).
- Cable splice kits.
- EMI/environment-resistant connector caps.
- Braid terminators and strain relief tubing (for rework applications).
- Cable marking materials.

Available in:	
Americas	■
Europe	■
Asia Pacific	■

Catalog 1654025
Revised 3-13

www.te.com

Dimensions are shown for reference purposes only. Specifications subject to change.

Dimensions are in millimeters unless otherwise specified.

USA: +1 800 522 6752
Asia Pacific: +86 0 400 820 6015
UK: +44 800 267 666

For additional support numbers please visit www.te.com

Accessories (Continued)

Product Selection

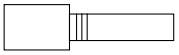

D-621 Plug

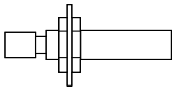

D-621 Jack

Splice-in

Bus and Stub Terminators

Spliced-in	12-inch Cable
77-ohm 10612 cable	D-500-0463-612
77-ohm 10613 cable	D-500-0463-613
77-ohm 10614 cable	D-500-0463-614

D-621 Series—Plug	Threaded	Bayonet A	Bayonet B	Bayonet C	Bayonet D
77-ohm pin contact	D-621-0413	D-621-0453	D-621-0454	D-621-0455	D-621-0456
77-ohm socket contact	D-621-0415	D-621-0469	D-621-0470	D-621-0471	D-621-0472
3000-ohm pin contact	D-621-0417	D-621-0457	D-621-0458	D-621-0459	D-621-0476
3000-ohm socket contact	D-621-0407	D-621-0473	D-621-0474	D-621-0475	D-621-0460
D-621 Series—Jack	**Threaded**	**Bayonet A**	**Bayonet B**	**Bayonet C**	**Bayonet D**
77-ohm pin contact	D-621-0418	D-621-0477	D-621-0478	D-621-0479	D-621-0480
77-ohm socket contact	D-621-0406	D-621-0461	D-621-0462	D-621-0463	D-621-0464
3000-ohm pin contact	D-621-0423	D-621-0481	D-621-0482	D-621-0483	D-621-0484
3000-ohm socket contact	D-621-0424	D-621-0465	D-621-0466	D-621-0467	D-621-0468
D-621 Series—L	**Lanyard 7”**	**—**	**—**	**—**	**—**

Connector Caps

D-621 Series	Threaded	Bayonet A	Bayonet B	Bayonet C	Bayonet D
Plug cap for jack connector Supplied with 7” Lanyard	D-600-0083	D-600-0068	D-600-0068	D-600-0068	D-600-0065

Cable Splice Kits

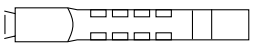

Cables	Flexible Crimp
All data bus cables	D-150-0708-5

Catalog 1654025
Revised 3-13

www.te.com

Dimensions are shown for reference purposes only. Specifications subject to change.

Dimensions are in millimeters unless otherwise specified.

USA: +1 800 522 6752
Asia Pacific: +86 0 400 820 6015
UK: +44 800 267 666

For additional support numbers please visit www.te.com

Accessories (Continued)

Terminator and Connector and Compatibility — Bayonet and Threaded Connectors

Panel Thickness	Connector	Contact	Terminator Reference	Mate with Standard Connector	Mate with Long Reach Connector
Bayonet Connectors					
Polarity A					
77 Ohm bus terminator	Plug	Pin	D-621-0453(-L)	DK-621-0434-1S	DK-621-0550-1S
	Plug	Socket	D-621-0469(-L)	DK-621-0434-1P	DK-621-0550-1P
	Jack	Pin	D-621-0477(-L)	DK-621-0433-1S	—
	Jack	Socket	D-621-0461(-L)	DK-621-0433-1P	—
3K Ohm stub terminator	Plug	Pin	D-621-0457(-L)	DK-621-0434-1S	DK-621-0550-1S
	Plug	Socket	D-621-0473(-L)	DK-621-0434-1P	DK-621-0550-1P
	Jack	Pin	D-621-0481(-L)	DK-621-0433-1S	—
	Jack	Socket	D-621-0465(-L)	DK-621-0433-1P	—
Polarity B					
77 Ohm bus terminator	Plug	Pin	D-621-0454-(-L)	DK-621-0436-2S	DK-621-0548-2S
	Plug	Socket	D-621-0470-(-L)	DK-621-0436-2P	DK-621-0548-2P
	Jack	Pin	D-621-0478-(-L)	DK-621-0435-2S	—
	Jack	Socket	D-621-0462-(-L)	DK-621-0435-2P	—
3K Ohm stub terminator	Plug	Pin	D-621-0458-(-L)	DK-621-0436-2S	DK-621-0548-2S
	Plug	Socket	D-621-0474-(-L)	DK-621-0436-2P	DK-621-0548-2P
	Jack	Pin	D-621-0482-(-L)	DK-621-0435-2S	—
	Jack	Socket	D-621-0466-(-L)	DK-621-0435-2P	—
Polarity C					
77 Ohm bus terminator	Plug	Pin	D-621-0455(-L)	DK-621-0438-3S	DK-621-0546-3S
	Plug	Socket	D-621-0471(-L)	DK-621-0438-3P	DK-621-0546-3P
	Jack	Pin	D-621-0479(-L)	DK-621-0437-3S	—
	Jack	Socket	D-621-0463(-L)	DK-621-0437-3P	—
3K Ohm stub terminator	Plug	Pin	D-621-0459(-L)	DK-621-0438-3S	DK-621-0546-3S
	Plug	Socket	D-621-0475(-L)	DK-621-0438-3P	DK-621-0546-3P
	Jack	Pin	D-621-0483(-L)	DK-621-0437-3S	—
	Jack	Socket	D-621-0467(-L)	DK-621-0437-3P	—
Polarity D					
77 Ohm bus terminator	Plug	Pin	D-621-0456(-L)	DK-621-0440-4S	DK-621-0551-4S
	Plug	Socket	D-621-0472(-L)	DK-621-0440-4P	DK-621-0551-4P
	Jack	Pin	D-621-0480(-L)	DK-621-0439-4S	—
	Jack	Socket	D-621-0464(-L)	DK-621-0439-4P	—
3K Ohm stub terminator	Plug	Pin	D-621-0460(-L)	DK-621-0440-4S	DK-621-0551-4S
	Plug	Socket	D-621-0476(-L)	DK-621-0440-4P	DK-621-0551-4P
	Jack	Pin	D-621-0468(-L)	DK-621-0439-4S	—
	Jack	Socket	D-621-0484(-L)	DK-621-0439-4P	—
Threaded Connectors					
77 Ohm bus terminator	Plug	Pin	D-621-0413(-L)	DK-621-0412-S	DK-621-0512-S
	Plug	Socket	D-621-0415(-L)	DK-621-0412-P	DK-621-0512-P
	Jack	Pin	D-621-0418(-L)	DK-621-0411-S	—
	Jack	Socket	D-621-0406(-L)	DK-621-0411-P	—
3K Ohm stub terminator	Plug	Pin	D-621-0417(-L)	DK-621-0412-S	DK-621-0512-S
	Plug	Socket	D-621-0407(-L)	DK-621-0412-P	DK-621-0512-P
	Jack	Pin	D-621-0423(-L)	DK-621-0411-S	—
	Jack	Socket	D-621-0424(-L)	DK-621-0411-P	—

Dimensions are shown for reference purposes only. Specifications subject to change.

Dimensions are in millimeters unless otherwise specified.

USA: +1 800 522 6752
Asia Pacific: +86 0 400 820 6015
UK: +44 800 267 666

For additional support numbers please visit www.te.com

Accessories (Continued)

Triaxial Connectors and Terminator Compatibility — Bayonet and Threaded Connectors

Panel Thickness	Connector	Contact	Connector Reference	Mate with		
				Connector	77 Ohm Bus Terminator	3K Ohm Stub Terminator
Bayonet Connectors						
Polarity A						
	Plug	Pin	DK-621-0433-1P	DK-621-0434-1S	D-621-0461(-L)	D-621-0465 (-L)
	Plug	Socket	DK-621-0433-1S	DK-621-0434-1P	D-621-0477(-L)	D-621-0481(-L)
Standard	Jack	Pin	DK-621-0434-1P	DK-621-0433-1S	D-621-0461(-L)	D-621-0473(-L)
2.4mm max.	Jack	Socket	DK-621-0434-1S	DK-621-0433-1P	D-621-0453(-L)	D-621-0457(-L)
Long Reach	Jack	Pin	DK-621-0550-1P	DK-621-0433-1S	D-621-0469(-L)	D-621-0473(-L)
12.5mm max.	Jack	Socket	DK-621-0550-1S	DK-621-0433-1P	D-621-0453(-L)	D-621-0457(-L)
Polarity B						
	Plug	Pin	DK-621-0435-2P	DK-621-0436-2S	D-621-0462(-L)	D-621-0474 (-L)
	Plug	Socket	DK-621-0435-2S	DK-621-0436-2P	D-621-0478(-L)	D-621-0458(-L)
Standard	Jack	Pin	DK-621-0436-2P	DK-621-0435-2S	D-621-0470(-L)	D-621-0474(-L)
2.4mm max.	Jack	Socket	DK-621-0436-2S	DK-621-0435-2P	D-621-0454(-L)	D-621-0458(-L)
Long Reach	Jack	Pin	DK-621-0448-2P	DK-621-0435-2S	D-621-0470(-L)	D-621-0467(-L)
12.5mm max.	Jack	Socket	DK-621-0448-2S	DK-621-0435-2P	D-621-0454(-L)	D-621-0483(-L)
Polarity C						
	Plug	Pin	DK-621-0437-3P	DK-621-0438-3S	D-621-0463(-L)	D-621-0467(-L)
	Plug	Socket	DK-621-0437-3S	DK-621-0438-3P	D-621-0479(-L)	D-621-0483(-L)
Standard	Jack	Pin	DK-621-0438-3P	DK-621-0437-3S	D-621-0471(-L)	D-621-0475(-L)
2.4mm max.	Jack	Socket	DK-621-0438-3S	DK-621-0437-3P	D-621-0455(-L)	D-621-0459(-L)
Long Reach	Jack	Pin	DK-621-0446-3P	DK-621-0437-3S	D-621-0471(-L)	D-621-0475(-L)
12.5mm max.	Jack	Socket	DK-621-0446-3S	DK-621-0437-3P	D-621-0455(-L)	D-621-0459(-L)
Polarity D						
	Plug	Pin	DK-621-0439-4P	DK-621-0440-4S	D-621-0464(-L)	D-621-0468(-L)
	Plug	Socket	DK-621-0439-4S	DK-621-0440-4P	D-621-0480(-L)	D-621-0484(-L)
Standard	Jack	Pin	DK-621-0440-4P	DK-621-0439-4S	D-621-0472(-L)	D-621-0460(-L)
2.4mm max.	Jack	Socket	DK-621-0440-4S	DK-621-0439-4P	D-621-0456(-L)	D-621-0476(-L)
Long Reach	Jack	Pin	DK-621-0551-4P	DK-621-0439-4S	D-621-0472(-L)	D-621-0476(-L)
12.5mm max.	Jack	Socket	DK-621-0551-4S	DK-621-0439-4P	D-621-0456(-L)	D-621-0460(-L)
Threaded Connectors						
	Plug	Pin	DK-621-0411-P	DK-621-0412-S	D-621-0406(-L)	D-621-0424(-L)
	Plug	Socket	DK-621-0411-S	DK-621-0412-P	D-621-0418(-L)	D-621-0423(-L)
Standard	Jack	Pin	DK-621-0412-P	DK-621-0411-S	D-621-0415(-L)	D-621-0407(-L)
2.4mm max.	Jack	Socket	DK-621-0412-S	DK-621-0411-P	D-621-0413(-L)	D-621-0417(-L)
Long Reach	Jack	Pin	DK-621-0412-P	DK-621-0411-S	D-621-0415(-L)	D-621-0407(-L)
12.5mm max.	Jack	Socket	DK-621-0412-S	DK-621-0411-P	D-621-0413(-L)	D-621-0417(-L)

Dimensions are shown for reference purposes only. Specifications subject to change.

Dimensions are in millimeters unless otherwise specified.

USA: +1 800 522 6752
Asia Pacific: +86 0 400 820 6015
UK: +44 800 267 666

For additional support numbers please visit www.te.com

Accessories (Continued)

Triaxial Connectors and Terminator Compatibility — to European norme 3716

Panel Thickness	Connector	Contact	Connector Reference	Mate with		
				Connector	77 Ohm Bus Terminator	3K Ohm Stub Terminator
Triaxial Connectors						
	Plug	Pin	DK-3716-F101-TP	DK-621-E102-TS	D-621-E077-S	D-621-E03K-S
	Plug	Socket	DK-3716-F101-TS	DK-621-E102-TP	D-621-E077-P	D-621-E03K-P
	Plug	Pin	DK-3716-F201-TP	DK-621-E202-TS	D-621-E077-S	D-621-E03K-S
	Plug	Socket	DK-3716-F201-TS	DK-621-E202-TP	D-621-E077-P	D-621-E03K-P
Standard 2.4mm max.	Jack	Pin	DK-3716-E102-TP	DK-621-F101-TS	D-621-F077-S	D-621-F03K-S
	Jack	Socket	DK-3716-E102-TS	DK-621-F101-TP	D-621-F077-P	D-621-F03K-P
	Jack	Pin	DK-3716-E202-TP	DK-621-F201-TS	D-621-F077-S	D-621-F03K-S
	Jack	Socket	DK-3716-E202-TS	DK-621-F201-TP	D-621-F077-P	D-621-F03K-P
Long Reach 12.5mm max.	Jack	Pin	DK-3716-E112-TP	DK-621-F101-TS	D-621-F077-S	D-621-F03K-S
	Jack	Socket	DK-3716-E112-TS	DK-621-F101-TP	D-621-F077-P	D-621-F03K-P
	Jack	Pin	DK-3716-E212-TP	DK-621-F201-TS	D-621-F077-S	D-621-F03K-S
	Jack	Socket	DK-3716-E212-TS	DK-621-F201-TP	D-621-F077-P	D-621-F03K-P

Panel Thickness	Connector	Contact	Terminator Reference	Mate with	
				Standard Connector	Long Reach Connector
Terminators					
77 Ohm bus terminator	Plug	Pin	DK-3716-F077-P	DK-3716-E#02-TS	DK-3716-E#12K-TS
	Plug	Socket	DK-3716-F077-S	DK-3716-E#02-TP	DK-3716-E#12K-TP
	Jack	Pin	DK-3716-F077-P	DK-3716-E#01-TS	—
	Jack	Socket	DK-3716-F077-S	DK-3716-E#01-TP	—
3K Ohm stub terminator	Plug	Pin	DK-3716-E03K-P	DK-3716-E#02-TS	DK-3716-E#12K-TS
	Plug	Socket	DK-3716-E03K-S	DK-3716-E#02-TP	DK-3716-E#12K-TP
	Jack	Pin	DK-3716-E03K-P	DK-3716-E#01-TS	—
	Jack	Socket	DK-3716-E03K-S	DK-3716-E#01-TP	—

Catalog 1654025
Revised 3-13

www.te.com

Dimensions are shown for reference purposes only. Specifications subject to change.

Dimensions are in millimeters unless otherwise specified.

USA: +1 800 522 6752
Asia Pacific: +86 0 400 820 6015
UK: +44 800 267 666

For additional support numbers please visit www.te.com

Triaxial Size 8 Contacts

Product Facts

- One-step termination
- Termination time of 1 to 2 minutes
- No requirements for special termination tools
- No requirements for special skills
- Reworkable and repairable terminations
- Strain relief
- Continuous 360° shield coverage
- Triaxial mating face for least susceptibility to damage
- Rugged construction, because only two parts are being soldered together
- Inspectable solder terminations
- Low voltage drop and high reliability due to precisely controlled solder termination

Applications

Contacts provide full shield coverage with a simple, quick, and reliable termination system. 24 AWG twisted-pair data bus cables are terminated with triaxial SolderTacts contacts, which fit size 8 cavities of MIL-C-38999, Series 1, 3, or 4 connectors.

Triaxial size 8 data bus contacts for MIL-C-38999 connectors have interfaces that comply with MIL-C-39029/90 and /91 to provide ease of termination, and intermateability with more cumbersome crimp contacts.

These contacts provide a fast and convenient method of implementing MIL-STD-1553B connections in MIL-STD-1760 applications.

Specifications/Approvals

Series	TE
Size 8	D-6002

Product Selection

Cable Type	Pin	Socket
10612	DK-602-0156-N-1	DK-602-0157-N-1
10613	DK-602-0156-N-2	DK-602-0157-N-2
10614	DK-602-0156-N-3	DK-602-0157-N-3

Available in:	
Americas	■
Europe	■
Asia Pacific	■

Catalog 1654025
Revised 3-13

www.te.com

Dimensions are shown for reference purposes only. Specifications subject to change.

Dimensions are in millimeters unless otherwise specified.

USA: +1 800 522 6752
Asia Pacific: +86 0 400 820 6015
UK: +44 800 267 666

For additional support numbers please visit www.te.com

Space Grade MIL-STD-1553B Data Bus Components

Product Facts

- **High packaging density and weight savings**
- **Design flexibility**
- **Complete line of space qualified MIL-STD-1553B components**
- **Low outgassing levels that meet NASA requirements**
- **Rugged construction**
- **Factory built harnesses eliminate unnecessary splices and connectors, reducing the cost and increasing the reliability of the networks**
- **Factory built harnesses are pre-tested to customer requirements and are ready for installation**

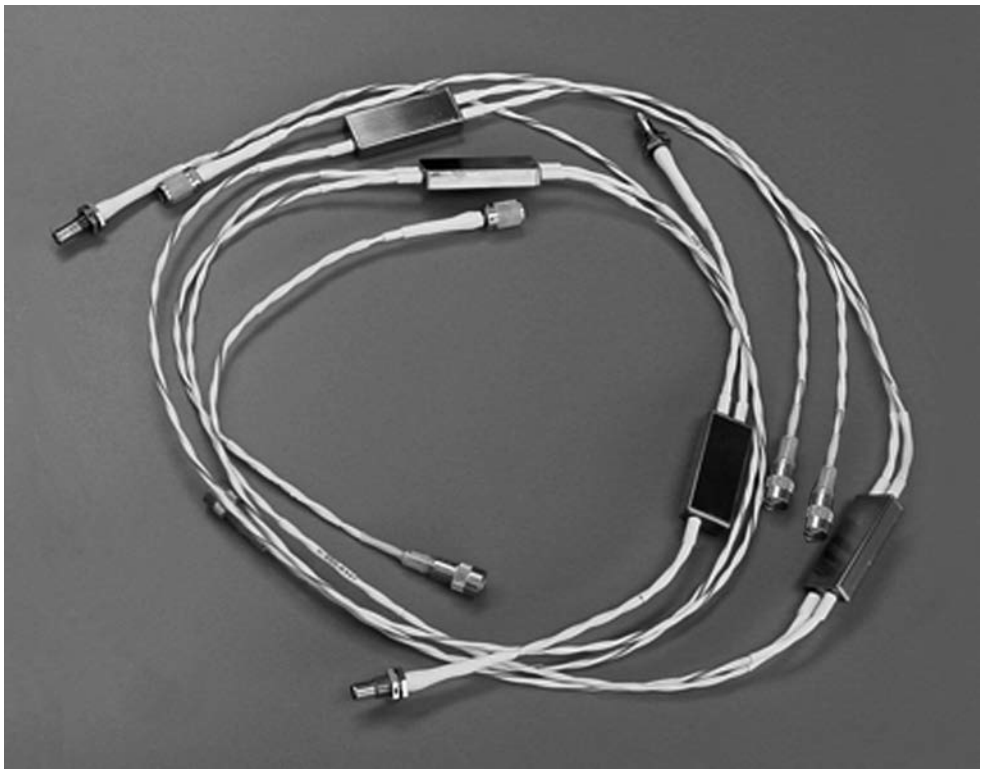

A complete system of interconnection hardware for MIL-STD-1553B networks

Complete collection of components include:

- A wide selection of in line couplers
- Data bus cables
- Triax connectors and contacts with strain relief
- One-piece triaxial contacts for MIL-C-38999 connectors
- Bus and stub terminators
- Low outgassing components for use in space
- Cable identification sleeves
- Harness design software using HarnWare software
- Flexible cable splices

Applications

Used in MIL-STD-1553B multiplexing space applications

Flight control for:

- Launch Vehicles
- Satellites
- Human Spacecraft
- Cargo Spacecraft
- Deep Space Probes

Specifications

Meets TE Specification D-6022 for space-grade data bus components.

Note: TE is a major supplier of space data bus products to a number of space equipment OEM's.

Available in:	
Americas	■
Europe	■
Asia Pacific	■

Catalog 1654025
Revised 3-13

www.te.com

Dimensions are shown for reference purposes only. Specifications subject to change.

Dimensions are in millimeters unless otherwise specified.

USA: +1 800 522 6752
Asia Pacific: +86 0 400 820 6015
UK: +44 800 267 666

For additional support numbers please visit www.te.com

Space Grade MIL-STD-1553B Data Bus Components (Continued)

Components

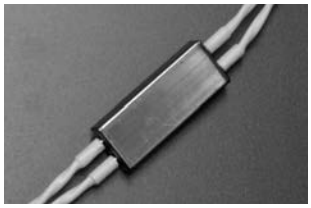

In-Line Couplers and Terminators

- Tin/Nickel-plated metallic parts
- Baked silicone rubber components
- Low out-gassing tubing
- D-500-94XX-X-XXX series for couplers
- D-500-9463-XXX series for terminators

Threaded Triaxial Connectors

- Tin/Nickel-plated metallic parts
- Baked silicone rubber components
- Low out-gassing tubing
- DK-621-0911P
- DK-621-0911S
- DK-621-0912P
- DK-621-0912S

Bayonet Triaxial Connectors

- Tin/Nickel-plated metallic parts
- Baked silicone rubber components
- Low out-gassing tubing

"A" Polarization

- DK-621-0933-1P or S
- DK-621-0934-1P or S

"B" Polarization

- DK-621-0935-2P or S
- DK-621-0936-2P or S

"C" Polarization

- DK-621-0937-3P or S
- DK-621-0938-3P or S

"D" Polarization

- DK-621-0939-4P or S
- DK-621-0940-4P or S

Splice Kits

- Flux-coated, solder impregnated copper shield braid encased in a transparent heat-shrinkable insulation sleeve provides a controlled soldering process, encapsulation, inspectability, strain relief and insulation
- D-150-9708-5

Standard Space Cables

- Optimized single shield
  S16 = 7724S1664-9
  S1L = 7724S1LL4 LF*

*LF = Low Fluoride

EMP Hardened

- S86 = 7724S8664-9
- S8L = 7724S8LL4-9 LF

Optimized Double Shield

- S36 = 7724S3664-9
- S3L = 7724S3LL4 LF

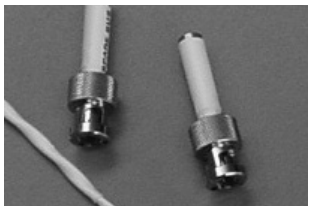

Demateable Terminators

- Available with and without lanyard
- DK-621-0937
- DK-621-0938
- DK-621-0939
- DK-621-0940
- DK-621-0933
- DK-621-0934
- DK-621-0935
- DK-621-0936

TE also manufactures complete harnesses to customer specifications and print.

Dimensions are shown for reference purposes only. Specifications subject to change.

Dimensions are in millimeters unless otherwise specified.

USA: +1 800 522 6752
Asia Pacific: +86 0 400 820 6015
UK: +44 800 267 666

For additional support numbers please visit www.te.com

Space Grade MIL-STD-1553B Data Bus Components (Continued)

Space-Grade In-Line Coupler Part Numbering System

D-500-94 W W -X -YYY -ZZZ

Cable Length
012 = 12 in
078 = 78 in
079 = 79 in
120 = 120 in
236 = 236 in
240 = 240 in

Cable Type
41L = 7724S1LL4 (24 AWG single optimized shield)
43L = 7724S3LL4 (24 AWG double optimized shield)
48L = 7724S8LL4 (24 AWG EMP hardened)

Number of Stubs
1, 2, 3, or 4

Design
5 = Without internal terminator
6 = Same as 5 but with reverse bus
7 = With internal terminator
8 = Same as 7 but with reverse bus

Style
5 = Without mounting eyelet
6 = With mounting eyelet

Catalog 1654025
Revised 3-13

www.te.com

Dimensions are shown for reference purposes only. Specifications subject to change.

Dimensions are in millimeters unless otherwise specified.

USA: +1 800 522 6752
Asia Pacific: +86 0 400 820 6015
UK: +44 800 267 666

For additional support numbers please visit www.te.com

Space Grade MIL-STD-1553B Data Bus Components (Continued)

Space-Grade Connectors Part Numbering System

DK-621 -09 XX -X X

Contact (installed, DK-621 kits only)
P = Pin*
S = Socket*
*May be ordered separately as D-602-0126 (pin) and D-602-0127 (socket)

Polarization (bayonet styles only) (jack view)

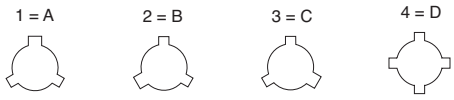

Basic Connector Configurations
Threaded styles:
11 = Plug
12 = Jack

Bayonet styles:
33 = Plug, A polarization
34 = Jack, A polarization
35 = Plug, B polarization
36 = Jack, B polarization
37 = Plug, C polarization
38 = Jack, C polarization
39 = Plug, D polarization
40 = Jack, D polarization

D-621 Connector, Kitted with Accessories

Space-Grade Terminators Part Numbering System

D-500-9463- ZZZ

Cable Type
41L = 7724S1LL4 (24 AWG single optimized shield)
43L = 7724S3LL4 (24 AWG double optimized shield)
48L = 7724S8LL4 (24 AWG EMP hardened)

Space-Grade Splice Kit = D-150-9708-5

Catalog 1654025
Revised 3-13

www.te.com

Dimensions are shown for reference purposes only. Specifications subject to change.

Dimensions are in millimeters unless otherwise specified.

USA: +1 800 522 6752
Asia Pacific: +86 0 400 820 6015
UK: +44 800 267 666

For additional support numbers please visit www.te.com

Customer-Specified Harness Assemblies and Harn*Ware* Harness Design Software

TE supplies complete Raychem brand data bus networks in accordance with customer harness drawings, with any customer-specified cables and/or connectors. Using factory-built harnesses eliminates unnecessary splices and connectors, reducing the cost and increasing the reliability of the networks. Factory-built harnesses are pre-tested and ready for installation.

Harn*Ware* Harness Design Software allows designers to draw a data bus harness in a matter of minutes, while selecting TE or others' components; a bill of materials is automatically generated.

Sample Drawing

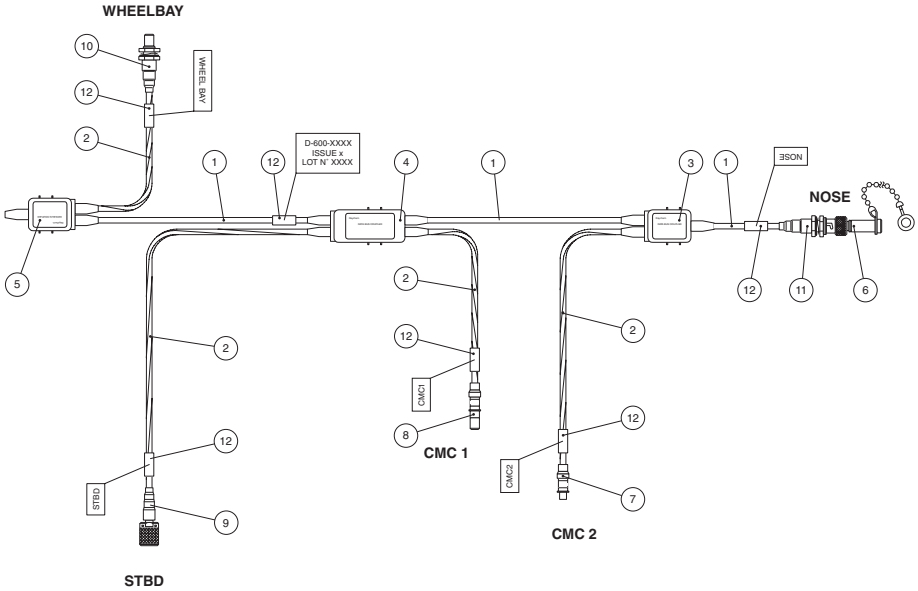

Parts List

Item	Description	Part No.	Spec/Remarks	Qty	Unit
1	Data bus Cable	10613-9	TE	5.3	M
2	Data bus Cable	10613-96	TE	7	M
3	Data bus Coupler	D-500-0455-1	TE	1	Pc
4	Data bus Coupler	D-500-0455-2	TE	1	Pc
5	Data bus Coupler	D-500-0457-1	TE	1	Pc
6	Data bus Terminator	D-621-0469-L	TE	1	Pc
7	Data bus Contact	DK-602-0156-N-2	TE	1	Pc
8	Data bus Contact	DK-602-0157-N-2	TE	1	Pc
9	Data bus Connector	DK-621-0411-P	TE	1	Pc
10	Data bus Connector	DK-621-0412-P	TE	1	Pc
11	Data bus Connector	DK-621-0434-1P	TE	1	Pc
12	Marker Sleeve	TMS-SCE-3/16-2.0-9	TE	6	Pc

Dimensions are shown for reference purposes only. Specifications subject to change.

Dimensions are in millimeters unless otherwise specified.

USA: +1 800 522 6752
Asia Pacific: +86 0 400 820 6015
UK: +44 800 267 666

For additional support numbers please visit www.te.com

Engineering Notes

Catalog 1654025
Revised 3-13

www.te.com

Dimensions are shown for reference purposes only. Specifications subject to change.

Dimensions are in millimeters unless otherwise specified.

USA: +1 800 522 6752
Asia Pacific: +86 0 400 820 6015
UK: +44 800 267 666

For additional support numbers please visit www.te.com

Table of Contents

Introduction 9-2

High-Performance Wire and Cable
- SPEC 44 Wire and Cable . . . . . 9-3 to 9-9
- SPEC 55 Wire and Cable . . . . . 9-10 to 9-20
- FlexLine (SPEC 80) Wire and Cable 9-21, 9-22

Low-Fire-Hazard Wire and Cable
- Type 99 Wire and Cable . . . . . 9-23 to 9-26
- Zerohal 100A Wire and Cable . . . . . 9-27 to 9-29
- Zerohal 100G Wire and Cable . . . . . 9-30 to 9-32

Signal and Control Cables for Offshore and Commercial Shipping
- C-Lite Low Fire Hazard Lightweight Cables . . . . . 9-33 to 9-49
- C-Lite F (Fire Resistant) Cable 9-50, 9-51

Commercial Wire Family
- FlexLite Wire 9-52, 9-53
- FlexLite CW Wire 9-54, 9-55
- FlexLite DW Wire 9-56, 9-57
- FlexLite TW Wire 9-58, 9-59
- FlexLite HT Wire 9-60, 9-61

Thermocouple Extension Cable
- Thermocouple Extension Cable . . . . . 9-62 to 9-64

Controlled Electrical Cables
- Electroloss FilterLine Cables . . . . . 9-67 to 9-72
- Cheminax Coaxial Cables . . . . . 9-73 to 9-75
- Cheminax High-Performance Cables 9-76
- Cheminax Twin Axial Cables 9-77, 9-78
- SeaLAN Ethernet Cables 9-79, 9-80
- SHF-260 Highly Flexible Wire 9-81
- ZEROHAL PROFIBUS Cables 9-82, 9-83
- QUADLITE Quadaxial Cables . . . . . 9-84 to 9-88
- High Speed Copper Cable Assemblies 9-89
- High Speed Copper Cables . . . . . 9-90 to 9-93

Multiconductor (Multicore) Cables
- Custom Designed and Standard Multiconductor Cables 9-94
- Multicore Cables 9-95, 9-96
- Computer Aided Design 9-97
- Custom Shipboard Cables 9-98

Braids
- RayBraid Tubular Braiding 9-99, 9-100

Cable Jacket Materials
- Properties and Specifications 9-101, 9-102
- FDR 25 . . . . . 9-103, 9-104
- Zerohal . . . . . 9-105 to 9-107
- Thermorad HTF/Fluoroelastomer 9-108
- Thermorad/Thermorad F 9-109
- Raythane, NT/Thermorad NTFR, Rayolin, and AFR 9-110
- NBC 9-111, 9-112

Miscellaneous
- Electrical Shielding 9-113, 9-114
- Power Cables . . . . . 9-115 to 9-118

Note: Users should independently evaluate the suitability of the product for their application. Before ordering, check with TE Connectivity for most current data.

Catalog 1654025
Revised 3-13

www.te.com

Dimensions are shown for reference purposes only. Specifications subject to change.

Dimensions are in millimeters unless otherwise specified.

USA: +1 800 522 6752
Asia Pacific: +86 0 400 820 6015
UK: +44 800 267 666

For additional support numbers please visit www.te.com

Introduction

TE provides wire and cable solutions for challenging environments and demanding applications. The product range includes high-performance insulated wires, coaxial and data bus cables, power cables, electronics wire, and multicore cables.

- **SPEC 44** wire is an economical yet rugged dual-wall insulation system rated at 150°C [221°F], with consistently low cost and reliable performance.
- **SPEC 55** wire insulation provides high reliability in harsh environments from -65°C to +200°C [-85°F to +392°F]. Resistant to electrical arc tracking, it combines the easy handling of a flexible wire with excellent resistance to scrape abrasion, and cut-through.
- **SPEC 80** (FlexLine) wire is insulated with a flexible modified radiation cross-linked ETFE polymer with a temperature rating of -65˚C to +200˚C [-85˚F to -395˚F]
- **Type 99** wire has a dual wall construction and has excellent mechanical performance and chemical resistance with a range of enhanced fire hazard properties.
- **ElectroLoss Filterline** wire reduces the vulnerability of critical circuits to high-frequency electromagnetic interference.
- **Cheminax** coaxial and data bus cables allow system designers to optimize minimum size and weight with impedance and attenuation characteristics.
- **Multiconductor (multicore)** cables organize a variety of TE wire and cable products in controlled geometries for specific applications. Using a computer-aided design system, TE can quickly design multicore cables to meet your needs. A variety of cable jackets are available to suit most applications.
- **High Speed Copper cable** designs are available for Cat 5e, Cat 6, IEEE 1394 and USB applications. This family of cables can be customized to meet specific application needs.
- **SeaLAN Cat 5e and Zerohal PROFIBUS** cables are designed to be used in the demanding marine environmental conditions while still meeting the high performance data standards.
- **Quadlite** quadraxial cables, rated up to 200˚C, offer small size and light weight high speed solutions in aerospace applications which require data protocols such as 100BaseT, 1000BaseT, FiberChannel and IEEE 1394.
- **C-Lite low fire hazard lightweight cables** offer significant size and weight reduction, when compared to conventional insulation systems, while at the same time meeting key criteria such as low fire hazard performance and mechanical robustness.
- **FlexLite commercial wire** family is available in various constructions for a variety of applications with temperature ratings from -45˚C up to 250˚C.
  FLCW is a general purpose and motor lead wire.
  FLDW is a dual-wall primary wire.
  FLTW is a thin-wall hookup wire and cable.
  FLHT is a high-temperature hookup wire.
  FLTX is an ultra-high temperature hookup wire.

TE wire and cable products can meet your specific application needs. Here are just a few examples:

- Limited-fire-hazard wire and cable for mass transit and marine applications.
- High-performance, high temperature automotive wiring.
- Small, light hookup wires for high-temperature applications in commercial appliances, tools, and devices.
- Very flexible, rugged, thin-wall insulated power cables.
- Low-outgassing space-vehicle wiring.
- Lightweight, shielded wire and cable constructions for aerospace applications.
- Thermocouple extension cables with a range of our high-performance insulation materials.

Contact TE to find out more about wire and cable and our associated interconnection products.

Dimensions are shown for reference purposes only. Specifications subject to change.

Dimensions are in millimeters unless otherwise specified.

USA: +1 800 522 6752
Asia Pacific: +86 0 400 820 6015
UK: +44 800 267 666

For additional support numbers please visit www.te.com

SPEC 44

Product Facts

- **Dual wall construction**
- **600, 1000 and 2500 voltage rating**
- **Small size, light weight**
- **Resistant to most chemicals and electrical arc tracking**

Applications

SPEC 44 wire has a dual wall construction which combines the outstanding physical and electrical characteristics of radiation crosslinked polyalkene with the excellent mechanical and chemical properties of radiation cross-linked polyvinylidene fluoride (PVDF).

The result is a wire insulation system that offers a 150°C [302°F] temperature rating, small size, light weight, solder iron resistance, and resistance to most solvents, fuels and lubricants.

SPEC 44 wire and cable is highly flame retardant, non-melting, does not cold flow, and though mechanically very tough, is easy to handle and install using conventional tools.

Originally developed for aerospace and military requirements in applications of high density and complex circuitry, SPEC 44 wire and cable now finds wide use throughout industry, in commercial and military electronics, avionics, on satellites, aircraft, helicopters, ships, trains, military ground systems, and offshore platforms where environmental conditions demand consistently reliable performance. In airframe applications SPEC 44 constructions can offer a modern dimensional replacement for PVC/Nylon/Glass braid type wire and cables. SPEC 44 wire is offered in a wide range of sizes in stranded conductors, standard materials available being tin or silver-plated copper and high strength copper alloy. Voltage ratings of 600, 1000 and 2500 volts are available as standard. Shielded and jacketed versions include single and multi-conductor constructions and flat braid shields where further size and weight savings are achieved.

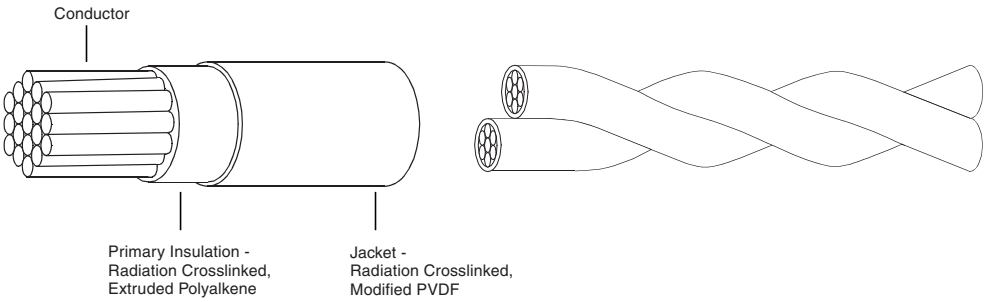

Available in:	Americas	Europe	Asia Pacific
	■	■	■

Catalog 1654025
Revised 3-13

www.te.com

Dimensions are shown for reference purposes only. Specifications subject to change.

Dimensions are in millimeters unless otherwise specified.

USA: +1 800 522 6752
Asia Pacific: +86 0 400 820 6015
UK: +44 800 267 666

For additional support numbers please visit www.te.com

SPEC 44 (Continued)

Physical Characteristics

Small Size

SPEC 44 equipment wire, 600 volt rated has a 0.19 [.008] nominal wall thickness compared to 0.25 [.010] and 0.38 [.015] for equivalent PTFE and PVC wires in MIL-DTL-16878, SAE AS22759 or BS 3G210.

Light Weight

Because of the thin wall and low density of the insulation materials considerable weight savings are made over similarly rated PTFE wires, eg:- 44A0111-22AWG equipment wire 4.45 grams/meter max
22 AWG PTFE equipment wire, AS-81044
5.54 grams/meter max

General Handling

The flexibility of SPEC 44 and the ease with which it takes a 'set' makes it one of the easiest of the 'high performance' wires to install. Stripping is done with conventional die blade strippers.

The tin-plated conductor usually specified is easily soldered or crimped. The insulation may be easily printed and does not need etching before potting.

Lengths

SPEC 44 is available in long continuous lengths and can be supplied for use on automatic cut and strip wire preparation machines.

Specifications/Approvals

AS-81044, NEMA-WC-27500 (Cables)
Def Stan. 61-12 Part 18 - Type 1 pliable (Maintenance Range)
Def Stan. 61-12 Part 26 All types
VG 95218 Parts 20, 21, 22, 23 and 1000
NATO Stock Numbers (NSN's) exist for most standard constructions
Civil Aviation Authority Accessory Approval E11623
TE Specification 44

NOTE:
Please check with TE personnel to ensure the product you wish to purchase is manufatured and released to the specification required.

Typical Properties

Temperature rating	-65°C to +150°C [-85°F to +302°F]
Voltage rating (thin wall)	600 V
Voltage rating (thick wall)	2500 V
Tensile strength and elongation of insulation	28 N/mm2, (4000 PSI), 230%
Notch propagation, 0.05mm notch	Pass
Solder iron resistance (370°C, 1 minute)	Pass
Shrinkage, 300°C	<1%
Low temperature bend	-65°C [-85°F]
Voltage withstand (thin wall)	2500 V
Resistance: fuels, oils, solvents	Pass

Dimensions are shown for reference purposes only. Specifications subject to change.

Dimensions are in millimeters unless otherwise specified.

USA: +1 800 522 6752
Asia Pacific: +86 0 400 820 6015
UK: +44 800 267 666

For additional support numbers please visit www.te.com

SPEC 44 (Continued)

Environmental Performance

Temperature Rating

SPEC 44 wire and cable is rated for continuous operation from -65°C to +150°C [-85°F to +302°F] and for short periods at temperatures as high as 300°C [572°F]. Heat ageing tests are routinely performed at temperatures of 200°C [392°F] (168 hr) and 300°C [572°F] (6 hr). In addition SPEC 44 insulation will not shrink back under repeated cycling.

Mechanical Performance

SPEC 44 wire provides better cut through resistance than some wires with much thicker walls. 600 volt equipment wire 44A0111 (0.19 mm wall) has 40% greater cut through resistance than 600 volt PTFE insulated wire (0.25 mm wall).

Solder Iron/Overload Resistance

The radiation crosslinking of the materials used in SPEC 44 makes them non-melting at high temperature. As a result SPEC 44 wire is resistant to prolonged contact with solder irons and is resistant to current overloads which would melt most thermoplastic insulation.

Chemical Resistance

The irradiated dual wall construction of SPEC 44 wire is highly resistant to many acids, alkalis, hydrocarbon solvents, fuels, lubricants, water, and many missile fuels and oxidizers.

Cold Flow

Radiation cross-linking of SPEC 44 prevents cold flow of the insulation — a recognized problem of some uncrosslinked materials.

Voltage Ratings

Standard available voltage ratings for SPEC 44 wire are 600 volts (0.19 mm wall thickness), 1000 volts (0.28 mm wall) and 2500 volts (0.48 mm wall).

Electrical Arc Track Resistance

SPEC 44 insulation demonstrates a resistance to arc tracking under both wet and dry conditions at aircraft system voltages.

Low Outgassing

For use in space applications, special constructions of SPEC 44 wire are available with low outgassing characteristics, for use in an environment of high vacuum and high temperature.

Fire Hazard Performance

Flammability	Federal Aviation Reg FAR-25	Pass
	BS EN 50265 Vertical Flammability	Pass
	S424 14751 (Swedish chimney)	Pass
	NFC 32070 (2) (French chimney)	Pass
	IEC 60332 part 3 (Cable ladder)	Pass
Smoke/Toxicity Index	Smoke Index, Def Stan 61-12 (18)	6 per meter of wire
	Toxicity Index, Def Stan 61-12 (18)	0.8 per meter of wire
	BS EN 1S0-4589 Part 2 BS EN 1S0-4589 Part 3	30% Oxygen
	Temperature Index, NES 715	>300°C [572°F]

SPEC 44 (Continued)

Part Numbering System

Cross items that are not standard.

44 X X X X X- AWG- X/X- X

Jacket Color
(codes same as for Primary Wire Insulation Color)

Primary Wire Insulation Color
(code per MIL-STD-681)

0 -	Black	5 -	Green
1 -	Brown	6 -	Blue
2 -	Red	7 -	Violet
3 -	Orange	8 -	Gray
4 -	Yellow	9 -	White

Conductor Size (AWG)

Conductor Type

1 - Tin-coated copper	A - Silver-coated CS95
2 - Silver-coated copper	C - Silver-coated high strength copper alloy (cadmium-free)
3 - Nickel-coated copper	D - Nickel-coated high strength copper alloy (cadmium-free)
4 - Silver-coated high strength copper alloy	
5 - Aluminum	
6 - Nickel-coated high strength copper alloy	

Number of Conductors
1 through 10 (designator for 10 conductor = 0)

Class of Wire

1 - 600 volt, general purpose	6 - 2500 volt, outerspace*
2 - 1000 volt, general purpose	7 - 600 volt, airframe
3 - 2500 volt, general purpose	8 - 600 volt, medium weight
4 - 600 volt, outerspace*	
5 - 1000 volt, outerspace*	

Construction

0 - Primary wire; or unshielded & unjacketed cable
1 - Round braid shielded and jacketed cable**
2 - Tin-coated copper flat braid shielded & jacketed cable
3 - Round braid shielded cable, no jacket**
4 - Jacketed cable, no shield
5 - Spiral braid shielded & jacketed cable**
7-9 - Special constructions

Temperature Rating:

/ - 135˚C (XL-PVF2 cable jacket) - USA only
A - 150˚C (XL-PVF2 cable jacket)
AC - 150˚C (same as 44AM with 90% min. shield coverage)
AM - 150˚C (M27500, shielded and/or XL-PVF2 jacketed cable)
B - 150˚C (XL-ETFE cable jacket)
D - 135˚C (XL-PVF2) - Def Stan Part 26-UK only)

Part Numbering System is a cross reference only and not meant for part creation.

Basic Product Number

* Classes 4, 5 and 6 available only as "44/" constructions. 44/7xxx and 44A7xxx will be available as indicated on the applicable SCD.
**Shield coating same as conductor coating except: - for Conductor Type 4, 6, C and D, shield shall be tin-coated copper for standard products

Typical ordering example	3 conductors, brown, yellow with green stripe, blue, white jacket. If 600 volt, round braid, 20 AWG tinned conductor, 44A1131-20-1/45/6-9.
Ordering information	Other constructions and custom designed wire and cable are available on request.

Dimensions are shown for reference purposes only. Specifications subject to change.

Dimensions are in millimeters unless otherwise specified.

USA: +1 800 522 6752
Asia Pacific: +86 0 400 820 6015
UK: +44 800 267 666

For additional support numbers please visit www.te.com

SPEC 44 (Continued)

NEMA WC-27500 Cable Part Numbering System

M27500 X AWG XX X X XX

Basic Specification Number

Component Wire ID/Shield Coverage Code

Shield Coverage 85%	Shield Coverage 90%	Component Wire Identification
-	C	Colored Stripes on White Wire (9/96/93/95/92/90/94/97/98/91... etc.)
A	D	Solid Color Wires (9/6/3/5/2/0/4/7/8/1...etc.)
B	E	Band Marks on Solid Colors (by AWG)
F	H	Alternate Colored Stripes (92/96/94/95/9/90/91/93/97/98...etc)
G	J	Alternate Solid Colors (2/6/4/5/9/0/1/3/7/8...etc.)
K	M	Number Marking on Solid Colors (by AWG)
L	N	Number Marking on White Wires
P	R	Band Marks on Colored Stripes (by AWG)
S	T	Band Marks on White Wires
U	V	Non-standard color - defined by customer

Conductor Size (AWG)

Basic Wire Spec Code (MIL-W-81044) and Slash Sheet

MD - M81044/5 (44A0712)
ME - M81044/6 (44A0711)
MF - M81044/7 (44A0714)
MG - M81044/8 (44A0812)
MH - M81044/9 (44A0811)
MJ - M81044/10 (44A0814)
MK - M81044/11 (44A0112)
ML - M81044/12 (44A0111)
MM - M81044/13 (44A0114)

Number of Component Wires

Shield Material and Style Code

U - No shield
T - Tin-coated copper, round
J - Tin-coated copper, flat
S - Silver-coated copper, round
G - Silver-coated copper, flat
N - Nickel-coated copper, round

Jacket Material and Style Code

00 - No jacket
08 - Crosslinked, white PVDF
23 - Crosslinked, white Modified ETFE

Example: **M27500-22ML3T08 = 44AM1131-22-9/96/93-9**

Tyco Electronics Part No.

Military Part No.

Part Numbering System is a cross reference only and not meant for part creation.

Dimensions are shown for reference purposes only. Specifications subject to change.

Dimensions are in millimeters unless otherwise specified.

USA: +1 800 522 6752
Asia Pacific: +86 0 400 820 6015
UK: +44 800 267 666

For additional support numbers please visit www.te.com

SPEC 44 (Continued)

Primary Wires/Twisted Pair

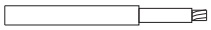

44A011X (600 V)
Primary Wire

44A021X (1000 V)
Primary Wire

Wire Size (AWG)	Stranding (mm)	Stranding #/AWG	CSA (mm²)	44A011X (600 V) Nom. OD	44A011X (600 V) Max. Weight (g/m) lb/kft	44A021X (1000 V) Nom. OD	44A021X (1000 V) Max. Weight (g/m) lb/kft
30	7/0.10	7/38	0.06	0.68 [0.027]	1.06 [0.71]	0.81 [0.032]	1.34 [0.9]
28	7/0.13	7/36	0.09	0.76 [0.030]	1.43 [0.96]	0.89 [0.035]	1.64 [1.1]
26*	19/0.10	19/38	0.15	0.86 [0.034]	2.08 [1.4]	1.02 [0.040]	2.38 [1.6]
24	19/0.13	19/36	0.25	1.02 [0.040]	2.98 [2.0]	1.17 [0.046]	3.57 [2.4]
22	19/0.16	19/34	0.40	1.19 [0.047]	4.46 [3.0]	1.37 [0.054]	5.20 [3.5]
20	19/0.20	19/32	0.60	1.40 [0.055]	6.70 [4.5]	1.57 [0.062]	7.59 [5.1]
18	19/0.25	19/30	1.00	1.65 [0.065]	10.12 [6.8]	1.85 [0.073]	11.46 [7.7]
16	19/0.29	19/29	1.25	1.83 [0.072]	12.80 [8.6]	2.06 [0.081]	14.58 [9.8]
14	19/0.36	19/27	2.00	2.26 [0.089]	19.64 [13.2]	2.49 [0.098]	21.88 [14.7]
12	37/0.32	37/28	3.00	2.74 [0.108]	30.06 [20.0]	2.97 [0.117]	32.89 [22.1]
10	37/0.40	37/26	5.00	3.28 [0.129]	46.28 [31.1]	3.71 [0.146]	52.98 [35.6]
8	133/0.29	133/29	8.30	—	—	5.23 [0.206]	91.97 [61.8]

*For 44A0211-26 the stranding is 7/0.16mm 7/34 AWG

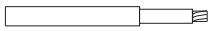

44A031X (2500 V)
Primary Wire

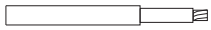

44A081X (600 V)
Airframe Wire

44A012X (600 V)
Twisted Pair

Wire Size (AWG)	Stranding (mm)	Stranding #/AWG	CSA (mm²)	44A031X (2500 V) Nom. OD	44A031X (2500 V) Max. Weight (g/m) lb/kft	44A081X (600 V) Nom. OD	44A081X (600 V) Max Weight (g/m) lb/kft	44A012X (600 V) Nom. OD	44A012X (600 V) Max. Weight (g/m) lb/kft
30	7/0.10	7/38	0.06	—	—	—	—	1.37 [0.054]	2.38 [1.6]
28	7/0.13	7/36	0.09	—	—	—	—	1.52 [0.060]	3.13 [2.1]
26	19/0.10	19/38	0.15	1.35 [0.053]	3.13 [2.1]	1.22 [0.048]	2.98 [2.0]	1.73 [0.068]	4.31 [2.9]
24	19/0.13	19/36	0.25	1.44 [0.057]	4.46 [3.0]	1.37 [0.054]	3.87 [2.6]	2.03 [0.080]	6.39 [4.3]
22	19/0.16	19/34	0.40	1.75 [0.069]	6.40 [4.3]	1.57 [0.062]	5.65 [3.8]	2.38 [0.094]	9.37 [6.3]
20	19/0.20	19/32	0.60	1.98 [0.078]	9.08 [6.1]	1.78 [0.070]	8.04 [5.4]	2.79 [0.110]	13.98 [9.4]
18	19/0.25	19/30	1.00	2.23 [0.088]	12.95 [8.7]	2.03 [0.080]	11.91 [8.0]	3.30 [0.130]	21.27 [14.3]
16	19/0.29	19/29	1.25	2.46 [0.097]	16.22 [10.9]	2.26 [0.089]	14.73 [9.9]	3.65 [0.144]	26.93 [18.1]
14	19/0.36	19/27	2.00	2.92 [0.115]	24.10 [16.2]	2.74 [0.108]	22.17 [14.9]	4.52 [0.178]	42.25 [28.4]
12	37/0.32	37/28	3.00	3.32 [0.131]	36.01 [24.2]	3.20 [0.126]	32.59 [21.9]	5.48 [0.216]	65.91 [44.3]
10	37/0.40	37/26	5.00	4.09 [0.161]	54.32 [36.5]	3.94 [0.155]	52.08 [35.0]	—	—
8	133/0.29	133/29	8.30	96.20 [0.219]	96.73 [65.0]	92.94 [0.214]	93.46 [62.8]	—	—

Dimensions are shown for reference purposes only. Specifications subject to change.

Dimensions are in millimeters unless otherwise specified.

USA: +1 800 522 6752
Asia Pacific: +86 0 400 820 6015
UK: +44 800 267 666

For additional support numbers please visit www.te.com

SPEC 44 (Continued)

Shielded and Jacketed Cable

44A111X (600 V)
1 Conductor

44A121X (1000 V)
1 Conductor

Wire Size (AWG)	Stranding (mm)	Stranding #/AWG	44A111X (600 V) Nom. OD	44A111X (600 V) Max. Weight (g/m) lb/kft	44A121X (1000 V) Nom. OD	44A121X (1000 V) Max. Weight (g/m) lb/kft
30	7/0.10	7/38	1.54 [0.061]	5.21 [3.5]	—	—
28	7/0.13	7/36	1.61 [0.063]	5.80 [3.9]	—	—
26	19/0.10	19/38	1.57 [0.065]	6.84 [4.6]	1.73 [0.068]	6.85 [4.6]
24	19/0.13	19/36	1.83 [0.072]	8.63 [5.8]	1.98 [0.078]	9.67 [6.5]
22	19/0.16	19/34	2.01 [0.079]	10.71 [7.2]	2.24 [0.088]	12.35 [8.3]
20	19/0.20	19/32	2.26 [0.089]	14.73 [9.9]	2.54 [0.100]	17.41 [11.7]
18	19/0.25	19/30	2.62 [0.103]	20.68[13.9]	2.82 [0.111]	22.62 [15.2]
16	19/0.29	19/29	2.79 [0.110]	24.55 [16.5]	3.02 [0.119]	26.64 [17.9]
14	19/0.36	19/27	3.22 [0.127]	34.08 [22.9]	3.45 [0.136]	36.16 [24.3]
12	37/0.32	37/28	3.70 [0.146]	47.77 [32.1]	4.14 [0.155]	49.56 [33.3]

Other sizes are also available in some constructions depending on conductor type and construction required.

44A181X (600 V)
1 Conductor

44A112X (600 V)
2 Conductor

Wire Size (AWG)	44A181X (600 V) Nom. OD	44A181X (600 V) Max. Weight (g/m) lb/kft	44A112X (600 V) Nom. OD	44A112X (600 V) Max. Weight (g/m) lb/kft
30	—	—	2.23 [0.088]	8.20 [5.8]
28	—	—	2.38 [0.094]	9.40 [6.6]
26	—	—	2.59 [0.102]	12.05 [8.1]
24	2.26 [0.089]	11.76 [7.9]	2.99 [0.118]	16.82 [11.3]
22	2.57 [0.101]	15.48 [10.4]	3.35 [0.132]	21.57 [14.5]
20	2.77 [0.109]	19.19 [12.9]	3.76 [0.148]	27.97 [18.8]
18	3.02 [0.119]	24.11 [16.2]	4.32 [0.170]	38.24 [25.7]
16	3.25 [0.128]	28.13 [18.9]	4.67 [0.184]	44.94 [30.2]
14	3.73 [0.147]	38.69 [26.0]	5.53 [0.218]	64.28 [43.2]
12	4.19 [0.165]	52.38 [35.2]	6.50 [0.256]	91.51 [61.5]

Other sizes are also available in some constructions depending on conductor type and construction required.

Catalog 1654025
Revised 3-13

www.te.com

Dimensions are shown for reference purposes only. Specifications subject to change.

Dimensions are in millimeters unless otherwise specified.

USA: +1 800 522 6752
Asia Pacific: +86 0 400 820 6015
UK: +44 800 267 666

For additional support numbers please visit www.te.com

SPEC 55

Product Facts

- **Resistant to electrical arc tracking in wet or dry conditions**
- **Single or dual wall constructions**
- **Small size, ultra light weight**
- **Exceptional chemical resistance**
- **-65°C to 200°C [-85°F to 392°F]**

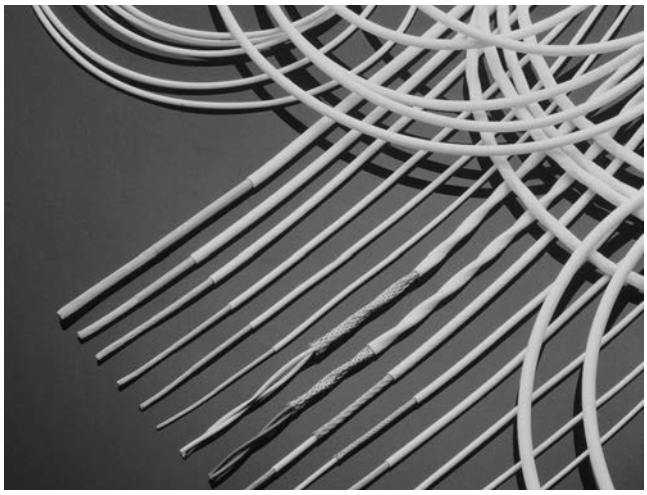

Applications

SPEC 55 wire is insulated with modified radiation cross-linked ETFE polymer. It has a temperature rating of -65°C to 200°C [-85°F to 392°F] continuous using a silver plated copper conductor, and combines the easy handling of a flexible wire with excellent scrape abrasion and cut-through characteristics.

The dual wall airframe construction of SPEC 55 wire is currently used on numerous aircraft programs. It has a choice of two total wall thicknesses, 0.25 [.010] (55A08XX 10 mil) and 0.2 [.008] (55A02XX 8 mil). Both have a contrasting core color to act as a damage indicator. Chosen for its balance of properties, SPEC 55 wire has outstanding resistance to chemicals and solvents, excellent electrical arc track resistance, and is not susceptible to UV and moisture degradation. Single wall equipment wire constructions are available in 0.10 [.004] (55/03XX 4 mil) and 0.15 [.006] (6 mil) wall thicknesses for use inside black boxes where flexibility and solder-iron resistance make it a wire which is very easy to install reliably.

Both single and dual wall insulated wires are available in twisted pairs, triples, etc., and as shielded and jacketed cables.

Physical Characteristics

Size and Weight

SPEC 55 wire provides one of the most comprehensive wiring product ranges for aerospace users, with a wide choice of conductor sizes and insulation wall thicknesses.The dual wall airframe wire has an insulation wall thickness of either 0.2 [.008] or 0.25 [.010] for robustness in unprotected harnesses and has excellent wire to wire abrasion properties.

The single wall equipment wire has a 0.15 [.006] wall thickness for use inside equipment and protected harnesses. For high density, interconnect wiring, the 450 volt 55M041X series of equipment wire has a nominal 0.1 [.004] wall and provides considerable weight and size savings over other comparable wires.

Handling

The excellent flexibility and handleability makes SPEC 55 the ideal wire to install, both in new aircraft and equipment and for maintenance purposes. The wire is easily stripped with conventional tooling. The insulation is readily marked by hot stamp, ink jet or laser, and can be potted without pre-etching.

SPEC 55PC Wire and Cable Insulation System

This product was originally developed to meet Boeing's material standard BMS13-48 for the 777 airliner. SPEC 55PC provides lightweight, compact insulation that matches the proven performance of our SPEC 55 wire. Today, 55PC is specified and utilized on the majority of aerospace platforms worldwide.

TE's rigorous, statistical-process-controlled manufacturing has produced wiring that is rugged and versatile enough for a wide range of commercial and defense aerospace applications, including electronic hook-ups in harsh, open airframe environments.

SPEC 55PC wire and cable systems feature an 8-mil airframe wire that is lighter and smaller than typical 10-mil wire, with little reduction in key mechanical performance features. SPEC 55PC wire offers flame resistance superior to FAA standards and also resists scrape abrasion, notch, propagation, cut-through, and electrical arc tracking.

- Meets Boeing material standard BMS 13-48.
- Exceeds FAR 25 test requirements for flame resistance and smoke density.

Available in:	
Americas	■
Europe	■
Asia Pacific	■

Catalog 1654025
Revised 3-13

www.te.com

Dimensions are shown for reference purposes only. Specifications subject to change.

Dimensions are in millimeters unless otherwise specified.

USA: +1 800 522 6752
Asia Pacific: +86 0 400 820 6015
UK: +44 800 267 666

For additional support numbers please visit www.te.com

SPEC 55 (Continued)

Specifications

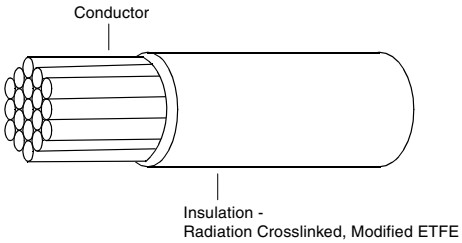

SPEC 55 Insulation System - Single Wall

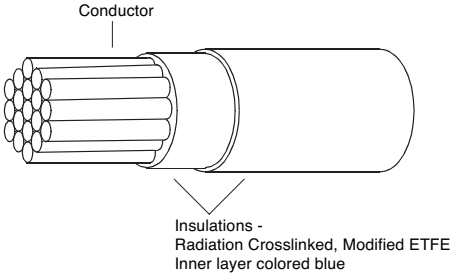

SPEC 55 Insulation System - Dual Wall

SAE AS22759/32-35 and /41 to /46 and NEMA-WC-27500 (Cables)
Defense Standard 61-12 Part 33 Issue 5
Part 1001 and Part 1002
VDE 9426, 9427, 9428
British Standard 3G233
Boeing BMS 13-48
Airbus ABS 0820 to 0826
NASA preferred product list
European Space Agency 3901/012, 3901/020 and 3901/022
TE Specification 55
Civil Aviation Authority Accessory Approval E11623

NOTE:
Please check with TE personnel to ensure the product you wish to purchase is manufatured and released to the specification required.

Typical Properties

Temperature rating (Tin plated conductor)	-65°C to +150°C [-85°F to +302°F]
(Silver or nickel plated conductor)	-65°C to +200°C [-85°F to +392°F]
Thermal endurance	200 °C [392°F], 10000 h
Scrape abrasion (BS 3G233)	>100 cycles at 150°C [302°F]
Flexing endurance (Boeing BSS 7324)	>1000 cycles
Voltage rating	600 V, 1000V
Tensile strength + elongation (core only)	(Dual wall wire) 35 N/mm², 125% min.
Tensile strength + total elongation (core & primary jacket)	(Dual wall wire) 35 N/mm², 75% min.
Notch propagation BS 3G230 0.05 mm notch	Pass
Solder iron resistance (370 °C, 1 minute)	Pass
Solderability - Tin plated copper conductor BS 3G233 conditions	<0.8 secs to wet
Shrinkage	<1%
Long term water resistance	Will not hydrolyze
Permitivity 1 KHz (ASTM D150)	2.7
Dissipation factor (ASTM D150)	0.001
FAR 25 Afterburn (sec) Burn length	~~0~~ 30 sec. max. 75 mm [3 in.] max.

Dimensions are shown for reference purposes only. Specifications subject to change.

Dimensions are in millimeters unless otherwise specified.

USA: +1 800 522 6752
Asia Pacific: +86 0 400 820 6015
UK: +44 800 267 666

For additional support numbers please visit www.te.com

SPEC 55 (Continued)

Environmental Performance

Temperature Rating

SPEC 55 wire and cable is rated for continuous operation from -65°C to +200°C [-85°F to +392°F] and for short periods at temperatures as high as 400°C [752°F].

Mechanical Performance

Radiation crosslinking of the SPEC 55 insulation significantly improves the following mechanical characteristics; scrape (sharp edges), cross wire abrasion, cut-through resistance and creep resistance.

Solder Iron/Overload Resistance

Radiation crosslinking ensures that the insulation resists melting at high temperatures. As a result SPEC 55 wire is resistant to hot solder irons and current overloads which would melt most thermoplastic insulation.

Chemical Resistance

SPEC 55 is unaffected by all commonly used chemicals, eg. fuels, hydraulic fluids, defluxing agents, cleaners, coolants and de-icers. It also shows excellent resistance to weathering (UV, ozone, pollutants, water).

Space Wire

SPEC 55 is available in special versions suitable for use in outer space meeting both ESA and NASA requirements for outgassing.

Flammability

Special additives increase the flame retardance of SPEC 55 compared to unirradiated ETFE so that it meets the latest high performance tests, eg. BS 3G230 and vertical test FAR25.

Electrical Arc Tracking Resistance

SPEC 55 insulation demonstrates resistance to arc tracking under both wet and dry conditions at aircraft system voltages.

SPEC 55 Wire & Cable: Standard Constructions, Nominal Sizes, Strandings, Diameters and Weights

Conductor	Primary Wire	Twisted Pair	Shielded & Jacketed	
			Single	Pair
			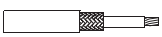	

55PC - Extra Light Weight Constructions

For applications where weight is critical, light weight tight tolerance conductors and insulation are available. These are manufactured using statistical process control methods and achieve weights that are equal or lighter than the equivalent polyimide/PTFE constructions.

Dimensions are shown for reference purposes only. Specifications subject to change.

Dimensions are in millimeters unless otherwise specified.

USA: +1 800 522 6752
Asia Pacific: +86 0 400 820 6015
UK: +44 800 267 666

For additional support numbers please visit www.te.com

SPEC 55 (Continued)

55A - AWG Conductor: Equipment/Interconnect Wires & Cables

Wire Size (AWG)	Stranding (mm)	55A011X		55A012X	
		Nom. OD	Max. Weight (g per m/lbs per kft)	Nom. OD	Max. Weight (g per m/lbs per kft)
30	7/0.102	0.61 [0.024]	0.98 [0.66]	1.27 [0.048]	1.94 [1.3]
28	7/127	0.68 [0.027]	1.35 [0.91]	1.42 [0.054]	2.68 [1.8]
26	19/102	0.81 [0.032]	2.08 [1.4]	1.67 [0.064]	4.16 [2.8]
24	19/127	0.94 [0.037]	2.98 [2.0]	1.93 [0.074]	5.96 [4.0]
22	19/0.16	1.09 [0.043]	4.17 [2.8]	2.23 [0.086]	8.63 [5.8]
20	19/0.203	1.27 [0.050]	6.40 [4.3]	2.66 [0.102]	13.24 [8.9]
18	19/0.25	1.52 [0.060]	9.67 [6.5]	3.20 [0.122]	20.09 [13.5]
16	19/287	1.73 [0.068]	12.35 [8.3]	3.58 [0.138]	25.75 [17.3]
14	19/0.36	2.20 [0.085]	19.34 [13.0]	4.47 [0.172]	39.58 [26.6]
12	37/0.32	2.62 [0.103]	29.32 [19.7]	5.38 [0.208]	59.97 [40.3]
10	37/0.403	3.25 [0.128]	47.32 [31.8]	6.65 [0.256]	96.58 [64.9]
8	133/0.287	4.77 [0.188]	87.50 [58.8]	9.80 [0.376]	178.58 [120.0]

Wire Size (AWG)	55A111X		55A112X	
	Nom. OD	Max. Weight (g per m/lbs per kft)	Nom. OD	Max. Weight (g per m/lbs per kft)
30	1.51 [0.057]	5.06 [3.4]	2.12 [0.081]	8.03 [5.4]
28	1.59 [0.060]	5.80 [3.9]	2.27 [0.087]	9.37 [6.30]
26	1.71 [0.065]	6.85 [4.6]	2.53 [0.097]	11.75 [7.9]]
24	1.84 [0.070]	8.19 [5.5]	2.80 [0.107]	14.58 [9.8]
22	1.99 [0.076]	10.27 [6.9]	3.07 [0.119]	18.15 [12.2]
20	2.20 [0.084]	13.40 [9.0]	3.50 [0.135]	24.10 [16.2]
18	2.45 [0.094]	17.86 [12.0]	4.10 [0.155]	32.60 [21.9]
16	2.67 [0.102]	21.73 [14.6]	4.43 [0.171]	39.73 [26.7]
14	3.10 [0.119]	30.36 [20.4]	5.30 [0.205]	57.13 [38.4]
12	3.55 [0.137]	42.41 [28.5]	6.30 [0.243]	81.98 [55.1]
10	4.20 [0.161]	62.65 [42.1]	7.40 [0.291]	123.63 [83.1]
8	5.80 [0.223]	110.42 [74.2]	10.60 [0.417]	226.15 [152.0]

55A - AWG Conductor: Airframe Wires & Cables

Wire Size (AWG)	Stranding (mm)	55A081X		55A082X	
		Nom. OD	Max. Weight (g per m/lbs per kft)	Nom. OD	Max. Weight (g per m/lbs per kft)
26	19/102	1.01 [0.040]	2.5 [1.7]	2.10 [0.080]	5.06 [3.4]
24	19/127	1.14 [0.045]	3.4 [2.3]	2.33 [0.090]	6.84 [4.6]
22	19/0.16	1.27 [0.050]	4.8 [3.2]	2.64 [0.102]	9.98 [6.7]
20	19/0.203	1.47 [0.058]	7.0 [4.7]	3.07 [0.118]	14.73 [9.9]
18	19/0.25	1.78 [0.070]	10.7 [7.2]	3.63 [0.140]	21.88 [14.7]
16	19/287	1.96 [0.077]	13.4 [9.0]	4.06 [0.156]	27.53 [18.5]
14	19/0.36	2.40 [0.094]	20.5 [13.8]	4.90 [0.190]	42.26 [28.4]
12	37/0.32	2.82 [0.111]	30.5 [20.5]	5.80 [0.224]	63.00 [42.3]
10	37/0.403	3.40 [0.134]	48.3 [32.4]	7.10 [0.272]	98.96 [66.5]

Wire Size (AWG)	55A181X		55A182X	
	Nom. OD	Max. Weight (g per m/lbs per kft)	Nom. OD	Max. Weight (g per m/lbs per kft)
26	1.854 [0.073]	7.89 [5.3]	2.870 [0.113]	14.29 [9.6]
24	1.981 [0.078]	9.37 [6.3]	3.124 [0.123]	16.37 [11.0]
22	2.134 [0.084]	11.76 [7.9]	3.429 [0.135]	20.68 [13.9]
20	2.337 [0.092]	14.88 [10.0]	3.853 [0.151]	27.08[18.2]
18	2.616 [0.103]	19.79[13.3]	4.394 [0.173]	36.46 [24.5]
16	2.819 [0.111]	23.81[16.0]	4.801 [0.189]	42.86 [28.8]
14	3.251 [0.128]	33.03 [22.2]	5.715 [0.225]	61.61 [41.4]
12	3.683 [0.145]	45.09 [30.3]	6.578 [0.259]	85.42 [57.4]
10	4.192 [0.168]	66.97[45.0]	7.797 [0.307]	127.54 [85.7]

Dimensions are shown for reference purposes only. Specifications subject to change.

Dimensions are in millimeters unless otherwise specified.

USA: +1 800 522 6752
Asia Pacific: +86 0 400 820 6015
UK: +44 800 267 666

For additional support numbers please visit www.te.com

SPEC 55 (Continued)

55PC - AWG Conductor: Statistical Process Controlled Airframe Wires & Cables

Wire Size (AWG)	Stranding (mm)	55PC021X		55PC022X	
		Nom. OD	Target Weight (g per m/lbs per kft)	Nom. OD	Target Weight (g per m/lbs per kft)
26	19/102	0.087 [0.035]	2.05 [1.38]	—	—
24	19/127	1.00 [0.0395]	2.95 [1.98]	2.00 [0.079]	5.95 [4.00]
22	19/0.16	1.15 [0.0455]	4.31 [2.90]	2.31 [0.091]	8.74 [5.87]
20	19/0.203	1.37 [0.0540]	6.51 [4.38]	2.74 [0.108]	13.2 [8.87]
18	19/0.25	1.61 [0.0635]	9.81 [6.59]	3.22 [0.127]	19.84 [13.33]
16	19/287	1.80 [0.0710]	12.46 [8.37]	3.60 [0.142]	25.21 [16.94]
14	19/.036	2.18 [0.0860]	19.17 [12.88]	4.36 [0.172]	38.80 [26.07]
12	37/0.32	2.66 [0.1047]	29.36 [19.73]	5.30 [0.209]	59.42 [39.93]
10	37/0.403	3.27 [0.1290]	46.31 [31.12]	6.55 [0.258]	93.92 [62.99]

Wire Size (AWG)	55PC121X		55PC122X	
	Nom. OD	Target Weight (g per m/lbs per kft)	Nom. OD	Target Weight (g per m/lbs per kft)
26	1.52 [0.064]	6.54 [4.4]	2.33 [0.100]	11.34 [7.62]
24	1.65 [0.069]	7.86 [5.28]	2.89 [0.109]	13.90 [9.34]
22	1.80 [0.075]	9.81 [6.59]	2.89 [0.122]	17.89 [12.02]
20	2.00 [0.083]	12.83 [8.62]	3.30 [0.139]	23.84 [16.02]
18	2.23 [0.093]	17.01 [11.43]	3.78 [0.158]	32.10 [21.57]
16	2.44 [0.100]	20.36 [13.68]	4.16 [0.174]	39.00 [26.21]
14	2.79 [0.116]	28.69 [19.28]	4.92 [0.204]	55.21 [37.10]
12	3.30 [0.135]	40.73 [27.37]	5.92 [0.243]	80.23 [53.45]
10	3.98 [0.159]	59.90 [40.25]	7.39 [0.297]	123.65 [83.09]

X = 1 -Tin plated copper conductor.
4 -Silver plated high strength copper alloy conductor. (Recommended for size 24 & 26 in airframe applications and mandatory for CAA release.)

SPEC 55 (Continued)

Part Numbering System 55A and 55LF — General Purpose

55 A 1 1 2 1 * - AWG - 2/6 - 9

Jacket Color (code per MIL-STD-681)
Codes same as for Primary Wire Insulation Color

Primary Wire Insulation Color (code per MIL-STD-681)

0 - Black	4 - Yellow	8 - Gray
1 - Brown	5 - Green	9 - White
2 - Red	6 - Blue	
3 - Orange	7 - Violet	

Conductor Size (AWG)

***Optional Shield Material**
H - High strength copper alloy, shield coating same as conductor coating (No designator defaults to coated "copper" shield, if any)

Conductor Type
1 - Tin-coated copper
2 - Silver-coated copper
3 - Nickel-coated copper
4 - Silver-coated high strength copper alloy
6 - Nickel-coated high strength copper alloy
A - Silver-coated ultra high-strength copper alloy

Number of Conductors
1 through 10 (designator for 10 conductor = 0)

Class of Wire
1 - 600 volt, lightweight
2 - 600 volt, medium weight
4 - 450V (55M 20-30 AWG only)
7 - 1000 volt, heavy duty, airframe
8 - 600 volt, normal weight, airframe

Constructions
0 - Primary wire; or unshielded & unjacketed cable
1 - **Round braid shielded & jacketed cable
2 - ** Flat braid shielded& jacketed cable
3 - ** Round braid shielded cable, no jacket
4 - Jacketed cable, no shield
5 - ** Spiral braid shielded & jacketed cable
6-9- Special constructions

Product Type
A - General purpose
AC - General purpose, 90% min. shield coverage
AF - General purpose, low fluoride
D - Defense Standard 61-12 Part 33
LF - General purpose, ultra low fluoride
LFC- General purpose, ultra low fluoride, 90% min. shield coverage
M - 450 Volt

Basic Product Number

Except for p/ns with Shield Material designation "H", shield coating same as conductor coating, **except:
- for Conductor Type 4, shield shall be tin-coated cooper
- for Conductor Types 6 and A, flat braid only, shield shall be tin-coated copper

The UK manufactures and supply large volumes of 55Mx4x4 (450 volt) construction wires and cables for Aerospace and Multisport applications.

Part Numbering System is a cross reference only and not meant for part creation.

SPEC 55 (Continued)

Part Numbering System
55/ — Outer Space

55 / 1 3 2 1 * - AWG - 0/9 - 9

Jacket Color (code per MIL-STD-681)
Codes same as for Primary Wire Insulation Color

Primary Wire Insulation Color (code per MIL-STD-681)

0 - Black	4 - Yellow	8 - Gray
1 - Brown	5 - Green	9 - White
2 - Red	6 - Blue	
3 - Orange	7 - Violet	

Conductor Size (AWG)

***Optional Shield Material**
H - High strength copper alloy, shield coating same as conductor coating (No designator defaults to coated "copper" shield, if any)

Conductor Type
1 - Tin-coated copper
2 - Silver-coated copper
3 - Nickel-coatedcopper
4 - Silver-coated high strength copper alloy
6 - Nickel-coated high strength copper alloy
A - Silver-coated ultra high-strength copper alloy

Number of Conductors
1 thorugh 10 (designator for 10 conductor = 0)

Class of Wire
1 - 600 volt, lightweight
2 - 600 volt, medium weight
3 - 600 volt, ultra lightweight
4 - 300 volt (discontinued)
7 - 1000 volt, heavy duty
8 - 600 volt, normal weight

Constructions
0 - Primary wire; or unshielded & unjacketed cable
1 - **Round braid shielded & jacketed cable
2 - ** Flat braid shielded & jacketed cable
3 - ** Round braid shielded cable, no jacket
4 - Jacketed cable, no shield
5 - ** Spiral braid shielded & jacketed cable
6-9- Special constructions

Product Type
/ - Outer Space
/F - Outer Space, low fluoride
/LF- Outer Space, ultra low fluoride
/P - Outer Space, shield coating same as conductor coating (valid with the following conductor types only: 4 for round braid; 4, 6 or A for flat braid)

Basic Product Number

For 55/: Except for p/ns with Shield Material designation "H", shield coating same as conductor coating, **except:
- for Conductor Type 4, shield shall be tin-coated cooper; - for Conductor Types 6 and A, flat braid only, shield shall be tin-coated copper. For 55/P, /LF: Shield coating same as conductor coating.
For product released to ESCC 3901/012, 3901/020 and/or 3901/022, please refer to TE for product designation and construction.

Part Numbering System is a cross reference only and not meant for part creation.

Catalog 1654025
Revised 3-13

www.te.com

Dimensions are shown for reference purposes only. Specifications subject to change.

Dimensions are in millimeters unless otherwise specified.

USA: +1 800 522 6752
Asia Pacific: +86 0 400 820 6015
UK: +44 800 267 666

For additional support numbers please visit www.te.com

SPEC 55 (Continued)

Part Numbering System 55PC and 55 PLF — Process Control

55 PC 1 1 2 4 * - AWG - 2/6 - 9

Jacket Color (code per MIL-STD-681)
Codes same as for Primary Wire Insulation Color

Primary Wire Insulation Color (code per MIL-STD-681)

0 - Black	4 - Yellow	8 - Gray
1 - Brown	5 - Green	9 - White
2 - Red	6 - Blue	
3 - Orange	7 - Violet	

Conductor Size (AWG)

***Optional Shield Material**
H - High strength copper alloy, shield coating same as conductor coating (No designator defaults to coated "copper" shield, if any)

Conductor Type
1 - Tin-coated copper
2 - Silver-coated copper
3 - Nickel-coated copper
4 - Silver-coated high strength copper alloy
5 - Aluminum
6 - Nickel-coated high strength copper alloy
A - Silver-coated ultra high-strength copper alloy

Number of Conductors
1 through 10 (designator for 10 conductor = 0)
0 - 10 conductors

Class of Wire
1 - 600 volt, lightweight, general purpose, single wall
2 - 600 volt, medium weight, general purpose
5 - 600 volt, lightweight, general purpose, dual wall
7 - 1000 volt, heavy duty, airframe, general purpose
8 - 600 volt, normal weight, airframe, general purpose

Constructions
0 - Primary wire; or unshielded & unjacketed cable
1 - **Round braid screened & jacketed cable
2 - ** Flat braid screened & jacketed cable
3 - ** Round braid, screened cable, no jacket
4 - Jacketed cable, no shield
5 - ** Spiral braid shielded & jacketed cable
6-9- Special constructions

Product Type
PC - Process Control
PCF- Process Control, low fluoride
PCFL-Process Control, low fluoride (lite)
PCL - Process Control (lite)
PCT- Process Control (stripping thread under jacket, and shield, if any)
PLF - Process Control, ultra low fluoride
PLFL-Process Control, ultra low fluoride (lite)

Basic Product Number

Except for p/ns with Shield Material designation "H", shield coating same as conductor coating, **except:
For 55PCL - for conductor type 6, flat braid only, shield shall be tin-coated copper
For 55PC and 55PCT - for conductor Type 4 and A, shield shall be tin-coated cooper
for Conductor Type 6, flat braid only, shield shall be tin-coated copper

Part Numbering System is a cross reference only and not meant for part creation.

Dimensions are shown for reference purposes only. Specifications subject to change.

Dimensions are in millimeters unless otherwise specified.

USA: +1 800 522 6752
Asia Pacific: +86 0 400 820 6015
UK: +44 800 267 666

For additional support numbers please visit www.te.com

SPEC 55 (Continued)

Typical Ordering Example	3 conductors, red, yellow, blue, 600 volt equipment wire with overall round braid, 20 AWG tinned conductor and white jacket: total part number is 55A1131-20-2/4/6-9.
Ordering Information	A list of stock policy items can be identified by contacting TE.

SPEC 55 Part Numbering System — General

Temperature Rating	Conductor Material	AWG Range Available	Part Number	MIL-SPEC No.
600-V Lightweight Single-wall Hookup Wire, .152 [.006] Nominal Wall				
150°C [302°F]	Tin-coated copper	12–30	55A0111	M22759/32
200°C [392°F]	Silver-coated copper	12–28	55A0112	M22759/44
200°C [302°F]	Nickel-coated copper	12–28	55A0113	M22759/45
200°C [392°F]	Silver-coated high-strength alloy	20–30	55A0114	M22759/33
200°C [392°F]	Nickel-coated high-strength alloy	20–28	55A0116	M22759/46
600-V Lightweight Dual-wall Airframe Wire, .203 [.008] Nominal Wall				
150°C [302°F]	Tin-coated copper	6–26	55A0211	—
200°C [392°F]	Silver-coated copper	10–26	55A0212	—
200°C [392°F]	Nickel-coated copper	10–26	55A0213	—
200°C [392°F]	Silver-coated high-strength alloy	18–30	55A0214	—
200°C [392°F]	Nickel-coated high-strength alloy	16–26	55A0216	—
600-V Dual-wall Airframe Wire, .254 [.010] Nominal Wall				
150°C [302°F]	Tin-coated copper	00–24	55A0811	M22759/34
200°C [392°F]	Silver-coated copper	00–26	55A0812	M22759/43
200°C [392°F]	Nickel-coated copper	00–26	55A0813	M22759/41
200°C [392°F]	Silver-coated high-strength alloy	20–26	55A0814	M22759/35
200°C [392°F]	Nickel-coated high-strength alloy	20–26	55A0816	M22759/42
1000-V Medium-Weight Dual-wall Airframe Wire, .381 [.015] Nominal Wall				
150°C [302°F]	Tin-coated copper	10–24	55A0711	—
200°C [392°F]	Silver-coated copper	16–24	55A0712	—
200°C [392°F]	Nickel-coated copper	16–24	55A0713	—
200°C [392°F]	Silver-coated high-strength alloy	16–24	55A0714	—
200°C [392°F]	Nickel-coated high-strength alloy	16–26	55A0716	—

Dimensions are shown for reference purposes only. Specifications subject to change.

Dimensions are in millimeters unless otherwise specified.

USA: +1 800 522 6752
Asia Pacific: +86 0 400 820 6015
UK: +44 800 267 666

For additional support numbers please visit www.te.com

SPEC 55 (Continued)

SPEC 55 Cable Constructions

Construction	Number of Components	Component Conductor[1]	Shield Material[1]	Part Number	
				Light Wt.[2]	Medium Wt.
Unshielded, unjacketed	2–10	1	—	55*01X1-AWG-Y	55*08X1-AWG-Y
		2	—	55*01X2-AWG-Y	55*08X2-AWG-Y
		3	—	55*01X3-AWG-Y	55*08X3-AWG-Y
		4	—	55*01X4-AWG-Y	55*08X4-AWG-Y
		6	—	55*01X6-AWG-Y	55*48X6-AWG-Y
Unshielded, jacketed	2–10	1	—	55*41X1-AWG-Y	55*48X1-AWG-Y
		2	—	55*41X2-AWG-Y	55*48X2-AWG-Y
		3	—	55*41X3-AWG-Y	55*48X3-AWG-Y
		4	—	55*41X4-AWG-Y	55*48X4-AWG-Y
		6	—	55*41X6-AWG-Y	55*48X6-AWG-Y
Shielded (round braid), jacketed	1–10	1	1	55*11X1-AWG-Y	55*18X1-AWG-Y
		2	2	55*11X2-AWG-Y	55*18X2-AWG-Y
		3	3	55*11X3-AWG-Y	55*18X3-AWG-Y
		4	1	55*11X4-AWG-Y	55*18X4-AWG-Y
		6	3	55*11X6-AWG-Y	55*18X6-AWG-Y
Shielded (flat braid), jacketed	1–10	1	1	55*21X1-AWG-Y	55*28X1-AWG-Y
		2	1	55*21X2-AWG-Y	55*28X2-AWG-Y
		3	1	55*21X3-AWG-Y	55*28X3-AWG-Y
		4	1	55*21X4-AWG-Y	55*28X4-AWG-Y
		6	1	55*21X6-AWG-Y	55*28X6-AWG-Y

[1]Type of conductor or shield material:
1 = tin-coated copper
2 = silver-coated copper
3 = nickel-coated copper
4 = silver-coated high-strength copper alloy
6 = nickel-coated high-strength copper alloy
* = A or PC

[2] X = no. of wire components
Y = color code
For complete part number, see Part Numbering System on page 9-15.

Dimensions are shown for reference purposes only. Specifications subject to change.

Dimensions are in millimeters unless otherwise specified.

USA: +1 800 522 6752
Asia Pacific: +86 0 400 820 6015
UK: +44 800 267 666

For additional support numbers please visit www.te.com

SPEC 55 (Continued)

NEMA WC-27500 Cable Part Numbering System

M27500 X AWG XX X X XX

Basic Specification Number

Component Wire ID/Shield Coverage Code

Shield Coverage 85%	Shield Coverage 90%	Component Wire Identification
-	C	Colored Stripes on White Wire (9/96/93/95/92/90/94/97/98/91... etc.)
A	D	Solid Color Wires (9/6/3/5/2/0/4/7/8/1...etc.)
B	E	Band Marks on Solid Colors (by AWG)
F	H	Alternate Colored Stripes (92/96/94/95/9/90/91/93/97/98...etc)
G	J	Alternate Solid Colors (2/6/4/5/9/0/1/3/7/8...etc.)
K	M	Number Marking on Solid Colors (by AWG)
L	N	Number Marking on White Wires
P	R	Band Marks on Colored Stripes (by AWG)
S	T	Band Marks on White Wires

Conductor Size (AWG)

Basic Wire Spec Code (SAE-AS-22759) and Slash Sheet

SB - 32 = 55A0111
SC - 33 = 55A0114
SD - 34 = 55A0811
for 2 AWG and larger, use 55A8039
SE - 35 = 55A0814
SM - 41 = 55A0813
for 2 AWG and larger, use 55A8595
SN - 42 = 55A0816
SP - 43 = 55A0812
for 2 AWG and larger, use 55A6089
SR - 44 = 55A0112
SS - 45 = 55A0113
ST - 46 = 55A0116

Number of Component Wires

1 through 9; 10 Components = 0

Shield Material and Style Code

U - No shield
T - Tin-coated copper, round
J - Tin-coated copper, flat
S - Silver-coated copper, round
G - Silver-coated copper, flat
N - Nickel-coated copper, round
V - Tin-coated copper, round, double shield
W - Silver-coated copper, round, double shield

Jacket Material and Style Code

00 - No jacket
23 - Single jacket crosslinked, modified ETFE, white
73 - Double jacket crosslinked, modified ETFE, white

Example: **M27500-22SB3T23 = 55A1131-22-9/96/93-9**

Tyco Electronics Part No.
Military Part No.

Part Numbering System is a cross reference only and not meant for part creation.

Dimensions are shown for reference purposes only. Specifications subject to change.

Dimensions are in millimeters unless otherwise specified.

USA: +1 800 522 6752
Asia Pacific: +86 0 400 820 6015
UK: +44 800 267 666

For additional support numbers please visit www.te.com

FlexLine (SPEC 80)

Product Facts

- Reduced weight
- Flexibility
- Low outgassing
- Function over a broad temperature range
- Flammability
- Arc track resistance
- Resistance to atomic oxygen
- Radiation resistance
- High quality and reliability
- Ease of fabrication (into Harnesses due to flexibility)
- Agency approvals
- -65°C up to +200°C [-85°F up to +395°F]
- Small size
- 600V rating
- Optional high strand count for increased flexibility
- Variety of insulation/jacket options
- Dual wall and single wall options
- Easy to install
- Mechanically tough
- Compliance with FAR 25 flammability requirements
- Resistance to harsh fluids & solvents per SAE-AS-22759

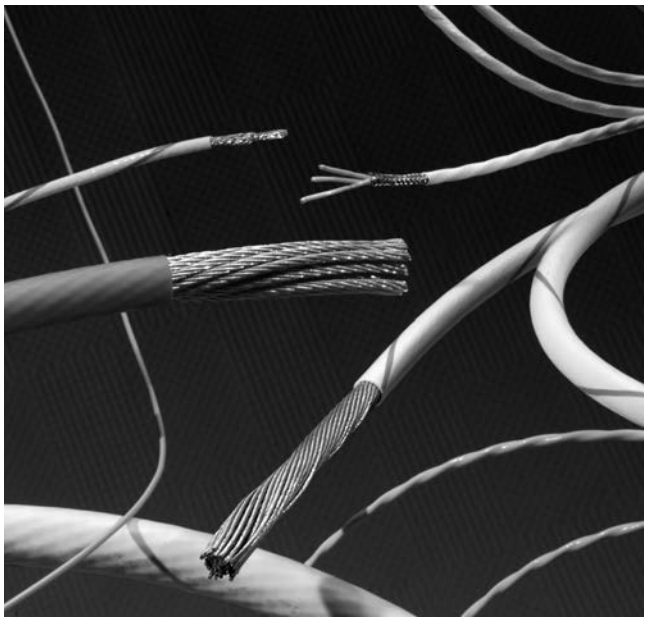

Applications

FlexLine wire (also known as SPEC 80) is insulated with a flexible modified radiation cross-linked ETFE polymer. It has a temperature rating of -65°C to +200°C [-85°F to +395°F] continuous using silver copper conductor, and combines the easy handling of our SPEC 55 wire and cable with additional flexibility. FlexLine wire is used in a broad range of applications, from Hook-up wire to Power Cables.

FlexLine wire constructions provide maximum flexibility similar to the SAE-AS-22759 products in Mechanical, Chemical and Thermal properties.

Available in:	Americas	Europe	Asia Pacific
	■	■	■

Catalog 1654025
Revised 3-13

www.te.com

Dimensions are shown for reference purposes only. Specifications subject to change.

Dimensions are in millimeters unless otherwise specified.

USA: +1 800 522 6752
Asia Pacific: +86 0 400 820 6015
UK: +44 800 267 666

For additional support numbers please visit www.te.com

FlexLine (SPEC 80) (Continued)

FlexLine Insulation System

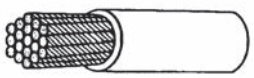

Single Wall

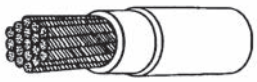

Dual Wall

Single Wall 82 Wire
High strand count conductors
Light weight
AWG sizes 28 to 00
(6-mil nominal insulation thickness)

Dual Wall 81 Wire
Standard M22759 conductor stranding
Increased toughness
AWG sizes 28 to 000
(10-mil nominal insulation thickness)

Part Numbering System 81 & 82 — General Purpose, Outer Space

82 A 1 1 2 1 - AWG - 0/9 - 9

Jacket Color (code per MIL-STD-681)
Codes same as for Primary Wire Insulation Color

Primary Wire Insulation Color (code per MIL-STD-681)

0 - Black	4 - Yellow	8 - Gray
1 - Brown	5 - Green	9 - White
2 - Red	6 - Blue	
3 - Orange	7 - Violet	

Conductor Size (AWG)

Conductor Type

1 - Tin-coated copper	4 - Silver-coated high strength copper alloy
2 - Silver-coated copper	
3 - Nickel-coated copper	6 - Nickel-coated high strength copper alloy

Number of Conductors
1 through 10 (designator for 10 conductor = 0)

Class of Wire
1 - 600 volt, lightweight
8 - 600 volt, normal weight

Construction
0 - Primary wire or unshielded & unjacketed cable
1 - *Round-braid shielded & jacketed cable
2 - *Flat-braid shielded & jacketed cable
3 - *Round-braid shielded cable, no jacket
4 - Jacketed cable, no shield
5 - *Spiral- braid shielded & jacketed cable
6-9 Special constructions

Product Type
/ - Outer Space
A - General Purpose
AC- Same as A with 90% min. shield coverage
B - Discontinued

Basic Product Number
81 - Normal Stranding
82 - High Stranding

Part Numbering System is a cross reference only and not meant for part creation.

* Shield coating same as conductor coating except for the following:
- for conductor type 4, shield shall be tin-coated copper
- for conductor type 6, flat braid only, shield shall be tin-plated copper

Catalog 1654025
Revised 3-13

www.te.com

Dimensions are shown for reference purposes only. Specifications subject to change.

Dimensions are in millimeters unless otherwise specified.

USA: +1 800 522 6752
Asia Pacific: +86 0 400 820 6015
UK: +44 800 267 666

For additional support numbers please visit www.te.com

Type 99M

Product Facts

- Low flammability
- Low smoke generation
- Low toxicity index
- Low generation of corrosive gases
- Small size, lightweight

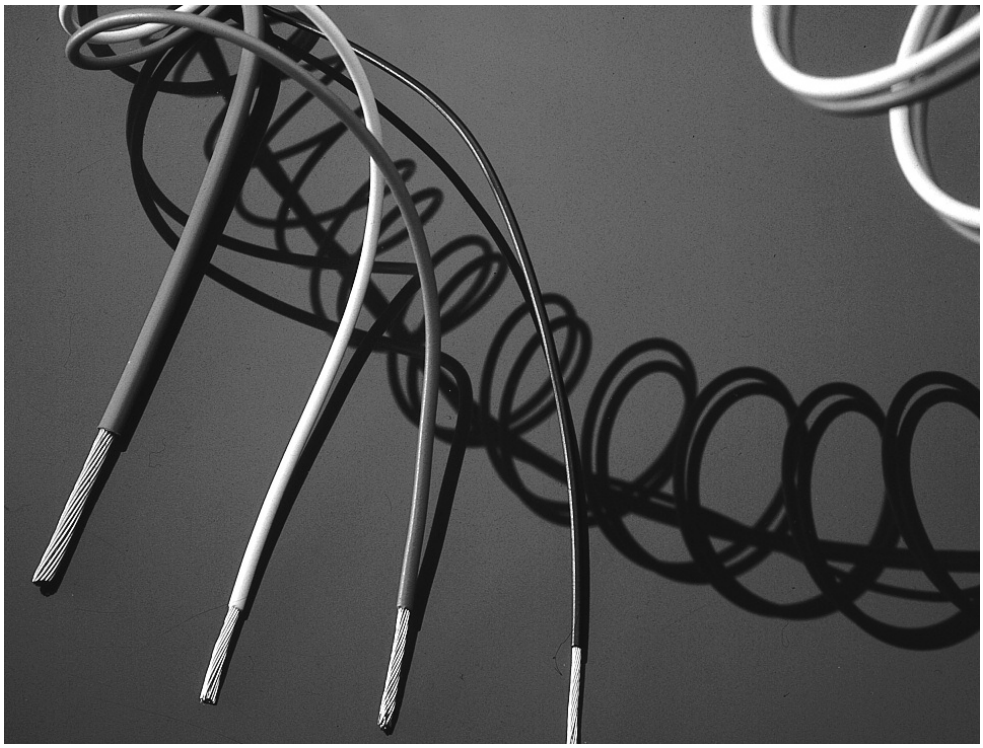

Applications

Type 99M wire has a dual wall construction of radiation cross-linked modified polyester. This combines excellent mechanical performance and chemical resistance with a range of enhanced fire hazard properties. Type 99M wire is designed to meet the stringent low fire hazard performance now being specified by the UK Naval Defense Standard Authority for ship wiring and cabling.

During the 1980's there were major changes in the demands of many wire and cable specifications to reduce the risks associated with all aspects of fire hazards. Specifications such as Def Stan 61-12 Part 18, have been developed over the last decade demanding improved performance of wires and cables under fire conditions.

This has led to a tightening of the requirements for flammability, smoke generation, corrosive gas generation and hazardous fume emission. Type 99M wire achieves these improvements in performance whilst retaining small size, light weight, flexibility, handleability, resistance to carbon arc tracking and resistance to chemicals and fluids.

Physical Characteristics

Handleability

Type 99M wire has been designed to be compatible with modern wiring and harnessing techniques. It is a flexible wire with virtually no springback once set. It is easily stripped with tools such as conventional die-blade strippers.

Small Size

Type 99M equipment wire has a nominal 0.2 mm insulation wall thickness which is comparable to other established thin wall wires such as SPEC 44 wire.

Light Weight

Type 99M wire is designed to have the same weights as SPEC 44 wire.

Available in:	Americas	Europe	Asia Pacific
	■	■	■

Catalog 1654025
Revised 3-13

www.te.com

Dimensions are shown for reference purposes only. Specifications subject to change.

Dimensions are in millimeters unless otherwise specified.

USA: +1 800 522 6752
Asia Pacific: +86 0 400 820 6015
UK: +44 800 267 666

For additional support numbers please visit www.te.com

Type 99M (Continued)

Approvals

TE WCD 281
Defense Standard 61-12 Part 18 Issue 5 Type 1
Italian Navy STN-SR-01

Type 99M Wire and Cable - Nominal Sizes, Strandings and Weights

99M011X (600 V)
Primary Wire

99M1111
Shielded & Jacketed

99M1121
Shielded & Jacketed

Primary Wires/Shielded and Jacketed Cables - 99M

Size	Stranding (mm)	99M011X (600 V)		99M1111		99M1121	
		OD	Weight (g/m)	OD	Weight (g/m)	OD	Weight (g/m)
26	19x0.10	0.88 [.035]	2.00	1.80 [.071]	7.5	2.91 [.115]	13.3
24	19x0.12	0.98 [.039]	3.00	1.90 [.075]	9.2	3.20 [.126]	16.6
22	19x0.15	1.13 [.044]	4.40	2.05 [.081]	11.1	3.52 [.139]	20.5
20	19x0.20	1.40 [.055]	6.50	2.30 [.091]	14.6	4.02 [.158]	27.7
18	19x0.25	1.65 [.065]	9.90	2.55 [.100]	19.3	4.57 [.180]	37.1
16	19x0.30	1.90 [.075]	14.15	2.95 [.116]	24.9	5.13 [.202]	48.5
14	37x0.25	2.25 [.089]	18.62	3.13 [.123]	30.9	5.72 [.225]	60.5
12	37x0.32	2.60 [.102]	25.70	3.48 [.137]	43.1	6.42 [.253]	81.3

Typical Properties (wire only)

Test	Method	Typical value
Temperature rating	BS 3G230	120°C [248°F]
Voltage rating	TE	600 V thin wall
Tensile strength/elongation of insulation	—	30 MPa/250%
Notch propagation (0.05 mm notch)	BS 3G230	Pass
Shrinkage 200°C [392°F]	BS 3G230	<1%
Low temperature bend	BS 3G230	-55°C [-67°F]
Voltage withstand	BS 3G230	2.5 kV
Insulation resistance (20°C [68°F])	BS 3G230	1000 M ohms km (min)
Pliability rating	Def Stan 61-12 (18)	82 - Pliable
Fluid resistance	Def Stan 61-12 (18)	
Fuels - aircraft		Pass
Oils - (IRM 903)		Pass
Solvents		Pass

Catalog 1654025
Revised 3-13

www.te.com

Dimensions are shown for reference purposes only. Specifications subject to change.

Dimensions are in millimeters unless otherwise specified.

USA: +1 800 522 6752
Asia Pacific: +86 0 400 820 6015
UK: +44 800 267 666

For additional support numbers please visit www.te.com

Type 99M (Continued)

Environmental Properties

Mechanical Performance

Type 99M wire has good scrape abrasion and cut through performance complying with the requirements of Def. Standard 61-12 Part 18.

Fluid Resistance

Type 99M wire demonstrates outstanding resistance to most acids, alkalis, hydrocarbon solvents, fuels, lubricants and water.

Electrical Arc Tracking

Type 99M wire is resistant to electrical arc tracking.

Voltage Ratings

Standard available voltage ratings for Type 99M wire is 600 V (0.2 mm wall thickness).

Fire Hazard Characteristics

Low Toxicity Index

Type 99M wire is designed to meet the low hazardous fume emission levels required in modern specifications. For example, the change in the Toxicity Index requirement from 1.5 to 0.2 between Issue 2 and Issue 5 of Def Stan 61-12 (Part 18), is met by Type 99M wire.

Flammability

Type 99M wire has passed the stringent flammability test requirements of Def. Standard 61-12 (Part 18).

Smoke Generation

Type 99M wire has been designed to meet stringent smoke tests such as those specified in Def Stan 61-12 (Part 18).

Corrosivity

Type 99M wire has a low corrosive gas emission, demonstrated by its low acid gas value, sufficient to pass the requirements of Def. Standard 61-12 Part 18.

Fire Hazard Properties

Test	Method	Typical value
Flammability	BS 3G230	Pass
Toxicity index	Def Stan 61-12 (18)	0.1 per meter of wire
Smoke index	Def Stan 61-12 (18)	8 per meter of wire
Acid gas equivalent	TDE 76/P/76	<1.5%

Catalog 1654025
Revised 3-13

www.te.com

Dimensions are shown for reference purposes only. Specifications subject to change.

Dimensions are in millimeters unless otherwise specified.

USA: +1 800 522 6752
Asia Pacific: +86 0 400 820 6015
UK: +44 800 267 666

For additional support numbers please visit www.te.com

Type 99M (Continued)

Part Numbering System

99 X X X X X- Size- X/X- X

Jacket Color
(in accordance with MIL-STD-681, black preferred)

Primary Wire Insulation Color
0=Black 1=Brown 2=Red 2L=Pink 3=Orange 4=Yellow
45=Yellow/Green 5=Green 6=Blue 7=Violet 8=Grey 9=White
Additional number after base color indicates stripe

Conductor Size

Conductor Type
1 - Tin-plated copper

Number of Conductors
1, 2, 3, 4 etc.

Class of Wire
1 - 600V equipment wire

Constructions
0 - Primary wire & unscreened, unjacketed cables
1 - Round braid screened & jacketed*
9 - Special construction

Wire Type
M - Military wire

Basic Specification Number

* The cable jackets are TE Zerohal and the preferred color is black.

Part Numbering System is a cross reference only and not meant for part creation.

Catalog 1654025
Revised 3-13

www.te.com

Dimensions are shown for reference purposes only. Specifications subject to change.

Dimensions are in millimeters unless otherwise specified.

USA: +1 800 522 6752
Asia Pacific: +86 0 400 820 6015
UK: +44 800 267 666

For additional support numbers please visit www.te.com

Zerohal 100A

Product Facts

- Halogen free, low smoke
- Highly flame retardant
- Flexible, easy to install
- Small size, lightweight (thin wall construction)

Applications

TE's latest generation LFH, thinwall wire has been designed for use primarily in signal, control and light power circuits in subway, regional and high speed trains. It is ideal for applications where space and weight are at a premium; fire safety is important; reliability is imperative; rugged properties to withstand service in an RMT environment are required.

The construction is a dual wall combination of TE formulated polymer blends developed to meet the specification requirements while maintaining the desirable features of small size, lightweight, flexibility, non-wrinkling, ease of stripping, compatibility with standard stripping equipment, lack of recoil and mechanical robustness.

Physical Characteristics

Handleability

Zerohal 100A wire has been designed for minimum recoil during harnessing operations, to be readily handleable by modern wiring and harnessing techniques and to be easily stripped with standard equipment and tools.

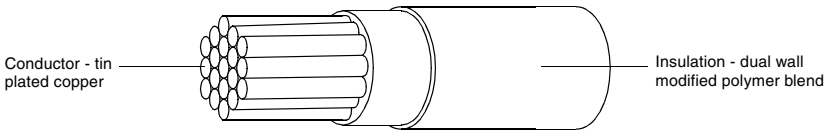

Available in:	Americas	Europe	Asia Pacific
	■	■	■

Catalog 1654025
Revised 3-13

www.te.com

Dimensions are shown for reference purposes only. Specifications subject to change.

Dimensions are in millimeters unless otherwise specified.

USA: +1 800 522 6752
Asia Pacific: +86 0 400 820 6015
UK: +44 800 267 666

For additional support numbers please visit www.te.com

Zerohal 100A (Continued)

Typical Properties

Test	Method	Typical Values
Physical Properties		
Insulation Tensile Strength and Ultimate Elongation	ASTM D3032	Tensile Strength 3500 psi minimum Ultimate Elongation 250% minimum
Scrape Abrasion Resistance	AAR S 501	1000 cycles minimum (90°, 0.01 inch radial edge blade, 6N load, 20°C [68°F])
Dynamic Cut Through	ASTM D3032	20 lbs. minimum (90°, 0.01 inch radial edge blade, 0.2 inch per min, 20°C [68°F])
Static Cut-through Penetration	AAR S 501	No contact with the conductor (90°, 0.01 inch radial edge blade, 10 min, 9N load, 125°C [257°F])
Thermal Properties		
Temperature Index	ASTM D3032	10,000 hours minimum at 125°C [257°F]
Accelerated ageing	ASTM D3032	No cracks, flow or dielectric breakdown. (168hr at 170°C [338°F])
Shrinkage	IEC 811-1-3	0.5% maximum at each end. (6hr at 160°C [320°F)
Insulation Blocking	MIL-W-22759E	Cores must be easily separated without damage (24hr at 125°C [257°F], 6X mandrel.)
Electrical Properties		
IR Constant	ASTM D3032	>10000 MΩkft at 20°C [68°F] >100 MΩkft at 60°C [140°F] >10 MΩkft at 90°C [194°F]
Environmental Properties		
Fluid Immersion	ASTM D3032	Fluid / NATO code / Temp (°C) / Time (hr) ASTM No.1 Oil / — / 100 / 70 IRM 902 Oil / — / 100 / 70 IRM 903 Oil / — / 100 / 70 70/30 iso-octane/toluene / — / 23 / 24 Engine lubricating oil / O-236 / 70 / 24 Grease / G-354 / 70 / 24 Hydraulic fluid, petroleum base / H-515 / 50 / 24 Silicone damping fluid / S-1724 / 70 / 24 Automotive brake fluid / H-542 / 23 / 24 Fire resistant hydraulic fluid / H-544 / 50 / 24 De-icing fluid / S-745 / 23 / 24 Methyl Ethyl Ketone / — / 23 / 1 5% max swell. No dielectric breakdown. (30mm diameter mandrel)
Fire Hazard Properties		
Flammability - small scale	IEC 332-1	Charring confined between 50mm and 540mm from lower edge of top support. (Single vertical wire, 60 s flame)
Flammability - large scale	IEC 332-3	2.5m maximum burn length. (Five 3.5m long 37-wire bundles, vertical, 20.5 kW flame)
Smoke - small scale	ISO 5659-2	Ds1.5 of 100 max., Ds4 of 150 max., Dmax of 150 max., VOF4 of 300 max. ('NBS' smoke box with cone heater, 1.8m of wire 50 kW/m2 heat flux with and without a pilot flame)
Smoke - large scale	IEC 1034	90% minimum transmittance. (3m cube smoke box. Eight 1m long 7-wire bundles, horizontal. Fire source: 1 litre burning alcohol.)
Toxicity	IMO FTPC	Toxicity index < 1 (Test conditions as in smoke - small scale)
Halogen Content	IEC 684-2	Less than 0.2% Cl + Br + I. Less than 0.1% F (Wet chemical analysis)
Copper Mirror Corrosion	ASTM D2671	5% maximum etched area. (0.4g sample, 200°C [392°F], 16hr.)
Acid Gas Detection	IEC 754-2	pH greater than 4.3 10 µS/mm maximum (1g sample, tube furnace, T > 935°C [1715°F], gases dissolved in water)

Ordering Information

Conductor				Finished Wire Maximum Resistance at 20°C /kft/km	Diameter		Maximum Weight lbs/kft kg/km	Part No.
Wire Size AWG	Stranding No x AWG Dia (mm)	Diameter Min.	Diameter Max.		Min.	Max.		
24	19x36	0.550 [0.022]	0.63 [0.025]	25.7 [84.32]	1.09 [0.043]	1.19 [0.047]	2.41 [3.59]	100A0111-24-*
22	19x34	0.735 [0.029]	0.79 [0.031]	15.9 [52.2]	1.26 [0.050]	1.33 [0.052]	3.34 [4.98]	100A0111-22*
20	19x32	0.940 [0.037]	1.01 [0.040]	9.9 [32.4]	1.46 [0.057]	1.54 [0.061]	4.98 [7.42]	100A0111-20*
18	19x30	1.170 [0.046]	1.26 [0.050]	6.2 [20.4]	1.69 [0.067]	1.79 [0.071]	7.31 [10.89]	100A0111-18*
16	19x29	1.321 [0.052]	1.37 [0.054]	4.8 [15.8]	1.84 [0.072]	1.94 [0.076]	9.19 [13.70]	100A0111-16*
14	19x27	1.650 [0.065]	1.79 [0.070]	3.1 [10.0]	2.27 [0.089]	2.39 [0.094]	14.45 [21.53]	100A0111-14*
12	37x28	2.080 [0.082]	2.24 [0.088]	2.0 [6.63]	2.71 [0.107]	2.86 [0.113]	21.03 [31.33]	100A0111-12*
10	37x26	2.690 [0.106]	2.83 [0.111]	1.3 [4.13]	3.33 [0.131]	3.51 [0.138]	33.27 [49.58]	100A0111-10*

Catalog 1654025
Revised 3-13

www.te.com

Dimensions are shown for reference purposes only. Specifications subject to change.

Dimensions are in millimeters unless otherwise specified.

USA: +1 800 522 6752
Asia Pacific: +86 0 400 820 6015
UK: +44 800 267 666

For additional support numbers please visit www.te.com

Zerohal 100A (Continued)

Environmental Properties

Fluid Resistance

Zerohal 100A wire demonstrates an outstanding balance of resistance to a wide range of commonly used solvents, fluids and lubricants.

Voltage Rating

Zerohal 100A wire is a 600 volt rated wire.

Fire Hazard Characteristics

Zerohal 100A wire is a halogen free insulation system and does not contain phosphorus or sulphur. It meets the toxicity, smoke density, halogen content, corrosivity and flammability requirements of major recognized agencies.

Flammability

Zerohal 100A wire meets the flammability/burning behavior requirements of major recognized agencies.

Fire Hazard Properties

Test	Method	Typical Value
Flammability - small scale	IEC 332-1	Charring confined between 50mm and 540mm from lower edge of top support. (Single vertical wire, 60 s flame)
Flammability - large scale	IEC 332-3	2.5m maximum burn length. (Five 3.5m long 37-wire bundles, vertical, 20.5 kW flame)
Flammability	IEEE 383	Pass
Smoke - small scale	ISO 5659-2	Ds1.5 of 100 max., Ds4 of 150 max., Dmax of 150 max., VOF4 of 300 max. ('NBS' smoke box with cone heater, 1.8m of wire 50 kW/m2 heat flux with and without a pilot flame)
Smoke - small scale	ASTM E662	Smoke density - Ds4 (Max.) Flaming - 200 Non-Flaming - 75
Toxicity	IMO FTPC	Toxicity index < 1 (Test conditions as in smoke - small scale)
Halogen Content	IEC 684-2	Less than 0.2% Cl + Br + I. Less than 0.1% F (Wet chemical analysis)
Copper Mirror Corrosion	ASTM D2671	5% maximum etched area. (0.4g sample, 200°C [392°F], 16hr.)
Acid Gas Detection	IEC 754-2	pH greater than 4.3 10 µS/mm maximum (1g sample, tube furnace, T > 935°C [715°F], gases dissolved in water)

Part Numbering System

100 A X X X X- Size- X/X - X

Jacket Color
0 - Black
2 - Red

Primary Wire Insulation Color
0 - Black
1 - Brown
2 - Red
3 - Orange
4 - Yellow
5 - Green
6 - Blue
7 - Violet
8 - Gray
9 - White

Conductor Size

Conductor Type
1 - Tin-plated copper

Number of Conductors
1 to 9

Class of Wire
1 - 600 V equipment wire

Construction
0 - Primary wire and unscreened, unjacketed cables
1 - Roundbraid, screened and jacketed
4 - Jacketed, no screen

Wire Type
A - AWG construction (US Specification)

Basic Specification Number

Part Numbering System is a cross reference only and not meant for part creation.

Catalog 1654025
Revised 3-13

www.te.com

Dimensions are shown for reference purposes only. Specifications subject to change.

Dimensions are in millimeters unless otherwise specified.

USA: +1 800 522 6752
Asia Pacific: +86 0 400 820 6015
UK: +44 800 267 666

For additional support numbers please visit www.te.com

Zerohal 100G

Product Facts

- Meets requirements of VG 95218-20 Type E
- Halogen free, low smoke
- Highly flame retardant
- Flexible, easy to install
- Small size, lightweight (thin wall construction)

Applications

Zerohal 100G wire was originally developed to meet the requirements of German Specification VG 95218-20, Type E primary wire.

The construction is a dual wall combination of TE formulated polymer blends developed to meet the specification requirements while maintaining the desirable features of small size, lightweight, flexibility, non-wrinkling, ease of stripping, compatibility with standard stripping equipment, lack of recoil and mechanical robustness.

System

- System 100

Physical Characteristics

Handleability

Zerohal 100G wire has been designed for minimum recoil during harnessing operations, to be readily handleable by modern wiring and harnessing techniques and to be easily stripped with standard equipment and tools.

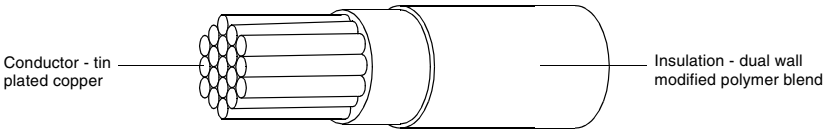

Available in:	Americas	Europe	Asia Pacific
	■	■	■

Catalog 1654025
Revised 3-13

www.te.com

Dimensions are shown for reference purposes only. Specifications subject to change.

Dimensions are in millimeters unless otherwise specified.

USA: +1 800 522 6752
Asia Pacific: +86 0 400 820 6015
UK: +44 800 267 666

For additional support numbers please visit www.te.com

Zerohal 100G (Continued)

Approvals

TE Specification WSD912 (Electrical cables and insulated wires for signals and power.
- Part 20: Single core insulated wires.)

Typical Properties

Test	Method	Typical Value
Max. operating temperature	VG 95218-20, ASTM D 3032	125°C [257°F] (20,000 h)
Insulation shrinkage (150°C)	DIN VDE 0472 Pt 628, IEC 811-1-3	< 0.5%
Low temperature bend	VG 95218 - Pt 2	-55°C [-67 °F]
Pressure test at high temperature	DIN VDE 0472 Pt 609, IEC 811-3-1	125°C [257°F] < 30% indentation
Heat aging (150°C, 6 h)	DIN VDE 0472 Pt 303,	No cracking, no dielectric
(140°C, 120 h)	IEC 811-1-2	breakdown
Voltage rating	VG 95218-20	750/1300 V AC
Abrasion resistance	VG 95218 - Pt 2	Pass
Insulation blocking (125°C)	VG 95218 - Pt 2	Pass
Voltage withstand	DIN VDE 0472 pt 509	Pass
(23°C, 2.5 kV rms)		
Insulation resistance	DIN VDE 0472 pt 502, IEC 885-1	> 500 M ohms. km (20°C [68°F]) > 0.5 M ohms. km (90°C [194°F])
Chemical resistance		
Grease (G-354)*	VG 95218 - Pt 2, 70°C 24h	< 5% diameter change, no dielectric breakdown
Hydraulic fluid (H-515, H-544)*	VG 95218 - Pt 2, 50°C 24h	< 5% diameter change, no dielectric breakdown
Brake fluid (H-542)*	VG 95218 - Pt 2, 23°C 24h	< 5% diameter change, no dielectric breakdown
De-icing fluid (S-745)*	VG 95218 - Pt 2, 23°C 24h	< 5% diameter change, no dielectric breakdown
MEK	VG 95218 - Pt 2, 23°C 1h	< 5% diameter change, no dielectric breakdown
70/30 ISO-Octane/ Toluene	VG 95218 - Pt 2, 23°C 24h	< 5% diameter change, no dielectric breakdown
Insulation		
Tensile strength	DIN VDE 0472 pt 602, IEC 811-1-1	> 20 MPa
Elongation at break	DIN VDE 0472 pt 602, IEC 811-1-1	> 200%

*NATO code. For further details please consult the German Standard VG 95218-20, Type E.

Part Numbering System

100 G X X X X- Size- X

Primary Wire Insulation Color

0 - Black	3 - Orange	7 - Violet
1 - Brown	4 - Yellow	8 - Gray
2 - Red	5 - Green	9 - White
2L - Pink	6 - Blue	

Conductor Size

Conductor Type
1 - Tin-plated copper

Number of Conductors
1

Class of Wire
1 - 750 V equipment wire

Construction
0 - Primary wire

Wire Type
G - Meeting the performance requirements of German Specification VG 95218-20, Type E

Basic Specification Number

Part Numbering System is a cross reference only and not meant for part creation.

Dimensions are shown for reference purposes only. Specifications subject to change.

Dimensions are in millimeters unless otherwise specified.

USA: +1 800 522 6752
Asia Pacific: +86 0 400 820 6015
UK: +44 800 267 666

For additional support numbers please visit www.te.com

Zerohal 100G (Continued)

Environmental Properties

Fluid Resistance

Zerohal 100G wire demonstrates an outstanding balance of resistance to a wide range of commonly used solvents, fluids and lubricants.

Voltage Rating

Zerohal 100G wire is a 750/1300 V AC rated wire.

Fire Hazard Characteristics

Zerohal 100G wire is a halogen free insulation system and does not contain phosphorus or sulphur. It meets the toxicity, smoke density, halogen content, corrosivity and flammability requirements of VG 95218-20, Type E.

Flammability

Zerohal 100G wire meets the flammability/burning behavior requirements of VG 95218-20, Type E.

Fire Hazard Properties

Test	Method	Typical value
Toxicity	Def. Standard 02-713	3.5
Smoke density	IEC 1034 Pt 1 and 2	95% light transmittance
Halogen content	DIN VDE 0472 pt 815	Non-detected
Corrosivity of combustion gases	DIN VDE 0472 pt 813, IEC 754-2	5.0 pH, <4 µS/mm conductivity
Flammability	VG 95218 Pt 2	< 15 sec afterburn < 150 mm burn length

Ordering Information

Part Description	Nominal Cross Sectional Area mm²	Nominal Conductor Stranding No./Dia (mm)	Equivalent AWG Size	Conductor Diameter (mm)		Minimum Insulation Thickness (mm)	Maximum Resistance @ 20° C (ohsm/km)	Diameter (mm)			Maximum Weight (kg/km)
				Min.	Max.			Lower Spec Limit	Target	Upper Spec Limit	
100G0111-0.15-*	0.15	19/0.10	26	0.45	0.50	0.20	133.0	0.98	1.03	1.08	2.59
100G0111-0.25-*	0.25	19/0.13	24	0.55	0.63	0.20	83.30	1.09	1.14	1.19	3.59
100G0111-0.40-*	0.40	19/0.16	22	0.73	0.79	0.20	50.50	1.28	1.33	1.38	5.18
100G0111-0.50-*	0.50	19/0.18	—	0.82	0.90	0.20	40.10	1.37	1.40	1.45	6.60
100G0111-0.60-*	0.60	19/0.20	20	0.95	1.01	0.20	31.10	1.47	1.52	1.57	7.40
100G0111-0.75-*	0.75	19/0.23	—	1.04	1.15	0.20	24.70	1.59	1.60	1.65	8.90
100G0111-1.00-*	1.00	19/0.25	18	1.17	1.26	0.20	20.00	1.69	1.75	1.80	10.7
100G0111-1.20-*	1.20	19/0.29	16	1.32	1.42	0.20	15.30	1.88	1.93	1.98	13.6
100G0111-1.50-*	1.50	37/0.23	15	1.46	1.58	0.20	12.90	2.03	2.08	2.13	16.0
100G0111-2.00-*	2.00	37/0.25	14	1.68	1.82	0.20	9.80	2.31	2.36	2.41	20.3
100G0111-2.50-*	2.50	37/0.29	13	1.85	2.01	0.25	8.01	2.50	2.55	2.63	25.7
100G0111-3.00-*	3.00	37/0.32	12	2.12	2.24	0.25	6.40	2.70	2.78	2.86	31.0
100G0111-4.00-*	4.00	56/0.30	—	2.41	2.57	0.25	4.89	3.01	3.09	3.17	43.6

Dimensions are shown for reference purposes only. Specifications subject to change.

Dimensions are in millimeters unless otherwise specified.

USA: +1 800 522 6752
Asia Pacific: +86 0 400 820 6015
UK: +44 800 267 666

For additional support numbers please visit www.te.com

C-Lite Low Fire Hazard Lightweight Cables

Product Facts

- **30% lighter than standard commercial cable for weight savings reductions**
- **Reduced diameter means that smaller bend radius can be used during installation**
- **Reduced and easier cable pulling time**

Applications

TE materials technology and expertise in processing allows the use of thinwall insulation systems. The use of Zerohal-EN cross-linked cable jacket completes this product offering.

C-Lite cable products can offer significant size and weight reduction, when compared to conventional insulation systems, while at the same time meeting key criteria such as low fire hazard performance and mechanical robustness.

Crosslinked Molecular Chain

TE Raychem was the first company to commercialize radiation cross-linking of insulation, initially for aero-space applications.

To achieve crosslinking a polymer product is exposed to high-energy radiation. This is generally done by exposure to beta radiation (high-energy electrons) using an electron beam.

Crosslinked insulations in wire and cable products are lightweight, mechanically tough and thermally stable.

Radiation Crosslinking

Molecular Chain

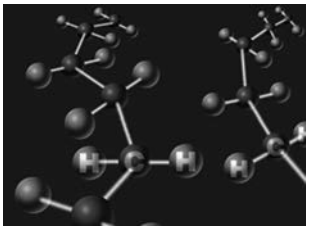

Crosslinking

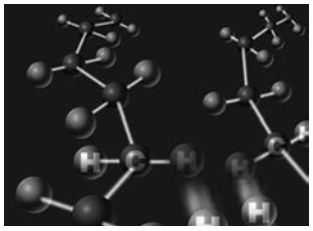

Crosslinked Molecular Chain

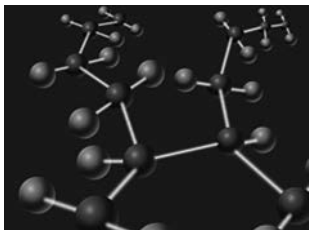

Available in:	
Americas	■
Europe	■
Asia Pacific	■

Catalog 1654025
Revised 3-13

www.te.com

Dimensions are shown for reference purposes only. Specifications subject to change.

Dimensions are in millimeters unless otherwise specified.

USA: +1 800 522 6752
Asia Pacific: +86 0 400 820 6015
UK: +44 800 267 666

For additional support numbers please visit www.te.com

C-Lite CL105-SU

Multicore Unscreened Cables

The new C-Lite cable range is constructed from flame retarded halogen free primary wire and crosslinked sheath materials.

Offering size and weight savings over traditional cables. The new C-Lite cable range is suitable for use in general power, lighting, communication, control and instrumentation applications.

Field of application

Instrumentation and communication control
General power and lighting

Voltage class

0.6/1kV

Temperature class

90°C

Flame retarded

IEC 60332-1,-3

Cable jacket

Zerohal

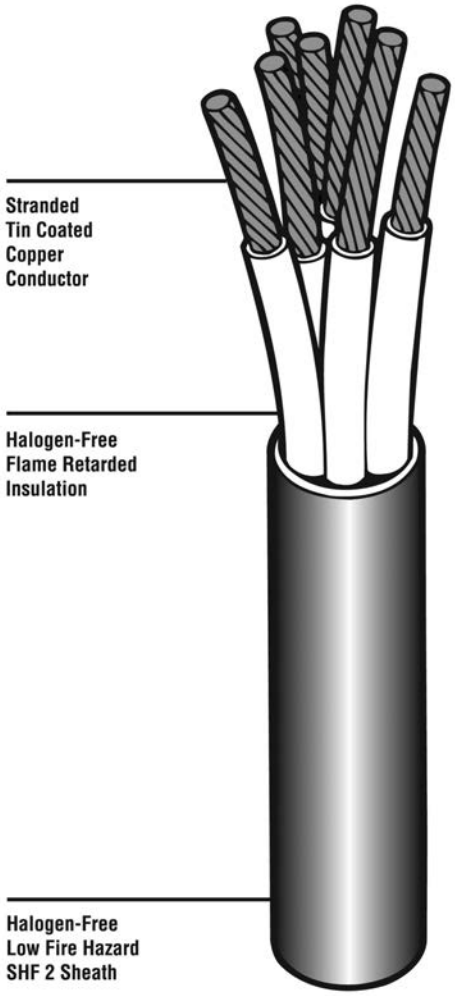

Core Identification

Standard 2 Core

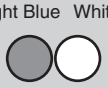

Others

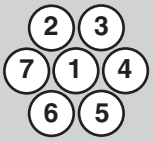

Additional cores numbered sequentially

Color Coded 2G

3G

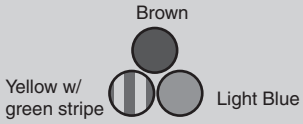

5G

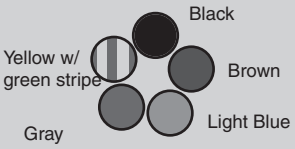

Approvals

DNV, LR, GL, ABS, KR, CCS, RMRS, NK, BV

Pending

RINA

Catalog 1654025
Revised 3-13

www.te.com

Dimensions are shown for reference purposes only. Specifications subject to change.

Dimensions are in millimeters unless otherwise specified.

USA: +1 800 522 6752
Asia Pacific: +86 0 400 820 6015
UK: +44 800 267 666

For additional support numbers please visit www.te.com

C-Lite CL105-SU (Continued)

Ordering Description	OD Under jacket (mm)	Nom Wall (mm)	Nom OD (mm)	Tolerance (mm)	Nom weight (kg/km)
STANDARD					
CL105-2x0.5 - SU	2.9	0.9	4.7	0.3	33
CL105-3x0.5 - SU	3.1	0.9	4.9	0.3	39
CL105-4x0.5 - SU	3.5	0.9	5.3	0.3	48
CL105-5x0.5 - SU	3.9	1.0	5.9	0.4	59
CL105-7x0.5 - SU	4.3	1.0	6.3	0.4	75
CL105-12x0.5 - SU	5.9	1.0	7.9	0.5	117
CL105-19x0.5 - SU	7.1	1.1	9.3	0.6	176
CL105-27x0.5 - SU	8.7	1.1	10.9	0.7	239
CL105-2x0.75 - SU	3.3	0.9	5.1	0.3	40
CL105-3x0.75 - SU	3.6	0.9	5.4	0.4	48
CL105-4x0.75 - SU	4	1.0	6.0	0.4	62
CL105-5x0.75 - SU	4.4	1.0	6.4	0.4	75
CL105-7x0.75 - SU	4.9	1.0	6.9	0.4	95
CL105-12x0.75 - SU	6.8	1.1	9.0	0.6	155
CL105-19x0.75 - SU	8.1	1.1	10.3	0.7	226
CL105-27x0.75 - SU	10	1.2	12.4	0.8	316
CL105-2x1.0 - SU	3.6	0.9	5.4	0.4	45
CL105-3x1.0 - SU	3.9	1.0	5.9	0.4	58
CL105-4x1.0 - SU	4.3	1.0	6.3	0.4	72
CL105-5x1.0 - SU	4.8	1.0	6.8	0.4	87
CL105-7x1.0 - SU	5.4	1.0	7.4	0.5	110
CL105-12x1.0 - SU	7.4	1.1	9.6	0.6	180
CL105-19x1.0 - SU	8.9	1.2	11.3	0.7	271
CL105-27x1.0 - SU	10.9	1.2	13.3	0.9	372
CL105-2x1.5 - SU	4.3	1.0	6.3	0.4	64
CL105-3x1.5 - SU	4.6	1.0	6.6	0.4	82
CL105-4x1.5 - SU	5.1	1.0	7.1	0.5	97
CL105-5x1.5 - SU	5.7	1.0	7.7	0.5	119
CL105-7x1.5 - SU	6.3	1.1	8.5	0.6	158
CL105-12x1.5 - SU	8.8	1.2	11.2	0.7	259
CL105-14x1.5 - SU	9.3	1.2	11.7	0.8	295
CL105-19x1.5 - SU	10.5	1.2	12.9	0.8	385
CL105-24x1.5 - SU	12.6	1.3	15.2	1.0	488
CL105-27x1.5 - SU	12.9	1.3	15.5	1.0	540
CL105-37x1.5 - SU	14.7	1.4	17.5	1.1	725
CL105-2x2.5 - SU	5.2	1.0	7.2	0.5	91
CL105-3x2.5 - SU	5.6	1.0	7.6	0.5	118
CL105-4x2.5 - SU	6.3	1.1	8.5	0.6	153
CL105-5x2.5 - SU	7	1.1	9.2	0.6	181
CL105-7x2.5 - SU	7.8	1.1	10.0	0.7	235
CL105-12x2.5 - SU	10.7	1.2	13.1	0.9	391
CL105-19x2.5 - SU	12.9	1.3	15.5	1.0	597
CL105-27x2.5 - SU	15.8	1.4	18.6	1.2	838
CL105-37x2.5 - SU	18	1.5	21.0	1.4	1129
COLOR CODED					
CL105-2Gx0.5 - SU	2.9	0.9	4.7	0.3	33
CL105-3Gx0.5 - SU	3.1	0.9	4.9	0.3	39
CL105-5Gx0.5 - SU	3.9	1.0	5.9	0.4	59
CL105-2Gx0.75 - SU	3.3	0.9	5.1	0.3	40
CL105-3Gx0.75 - SU	3.6	0.9	5.4	0.4	48
CL105-5Gx0.75 - SU	4.4	1.0	6.4	0.4	75
CL105-2Gx1.0 - SU	3.6	0.9	5.4	0.4	45
CL105-3Gx1.0 - SU	3.9	1.0	5.9	0.4	58
CL105-5Gx1.0 - SU	4.8	1.0	6.8	0.4	87
CL105-2Gx1.5 - SU	4.3	1.0	6.3	0.4	64
CL105-3Gx1.5 - SU	4.6	1.0	6.6	0.4	82
CL105-5Gx1.5 - SU	5.7	1.0	7.7	0.5	119
CL105-2Gx2.5 - SU	5.2	1.0	7.2	0.5	91
CL105-3Gx2.5 - SU	5.6	1.0	7.6	0.5	118
CL105-5Gx2.5 - SU	7.0	1.1	9.2	0.6	181

Dimensions are shown for reference purposes only. Specifications subject to change.

Dimensions are in millimeters unless otherwise specified.

USA: +1 800 522 6752
Asia Pacific: +86 0 400 820 6015
UK: +44 800 267 666

For additional support numbers please visit www.te.com

C-Lite CL105-SO

Multicore Overall Screened Cables

The new C-Lite cable range is constructed from flame retarded halogen free primary wire and crosslinked sheath materials.

Offering size and weight savings over traditional cables. The new C-Lite cable range is suitable for use in general power, lighting, communication, control and instrumentation applications.

Field of application

Instrumentation and communication control
General power and lighting

Voltage class

0.6/1kV

Temperature class

90°C

Flame retarded

IEC 60332-1,-3

Cable jacket

Zerohal

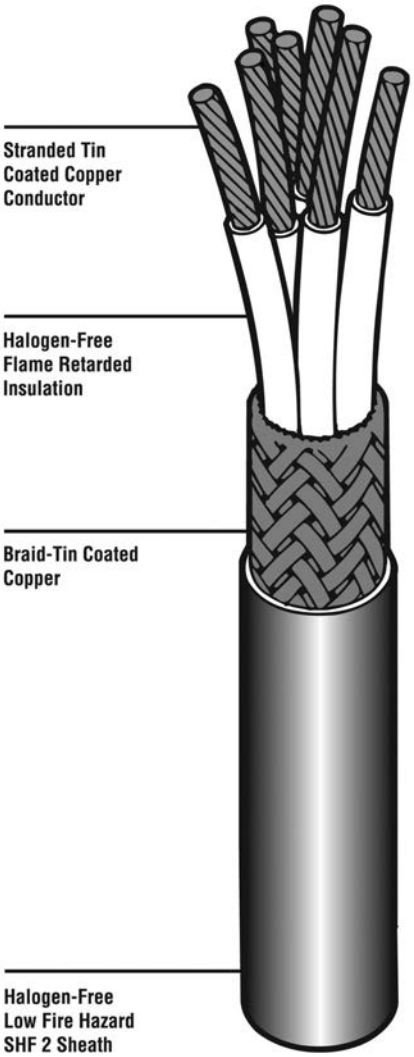

Core Identification

Standard 2 Core

Others

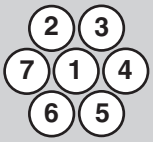

Additional cores numbered sequentially

Color Coded 2G

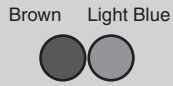

3G

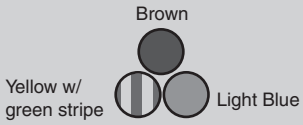

5G

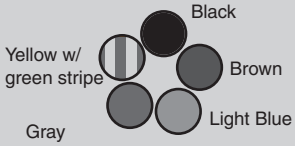

Approvals

DNV, LR, GL, ABS, KR, CCS, RMRS, NK, BV

Pending

RINA

Catalog 1654025
Revised 3-13

www.te.com

Dimensions are shown for reference purposes only. Specifications subject to change.

Dimensions are in millimeters unless otherwise specified.

USA: +1 800 522 6752
Asia Pacific: +86 0 400 820 6015
UK: +44 800 267 666

For additional support numbers please visit www.te.com

C-Lite CL105-SO (Continued)

Ordering Description	OD Under jacket (mm)	Nom Wall (mm)	Nom OD (mm)	Tolerance (mm)	Nom weight (kg/km)
STANDARD					
CL105-2x0.5 - SO	3.5	0.9	5.3	0.3	48
CL105-3x0.5 - SO	3.7	0.9	5.5	0.4	55
CL105-4x0.5 - SO	4.1	1.0	6.1	0.4	68
CL105-5x0.5 - SO	4.5	1.0	6.5	0.4	79
CL105-7x0.5 - SO	4.9	1.0	6.9	0.4	96
CL105-12x0.5- SO	6.5	1.1	8.7	0.6	149
CL105-19x0.5 - SO	7.7	1.1	9.9	0.6	208
CL105-27x0.5 - SO	9.3	1.2	11.7	0.8	284
CL105-2x1.0 - SO	4.2	1.0	6.2	0.4	66
CL105-3x1.0 - SO	4.5	1.0	6.5	0.4	78
CL105-4x1.0 - SO	4.9	1.0	6.9	0.4	93
CL105-5x1.0 - SO	5.4	1.0	7.4	0.5	110
CL105-7x1.0 - SO	6	1.0	8	0.5	135
CL105-12x1.0 - SO	8	1.1	10.2	0.7	214
CL105-19x1.0 - SO	9.5	1.2	11.9	0.8	311
CL105-27x1.0 - SO	11.5	1.3	14.1	0.9	427
CL105-2x1.5 - SO	4.9	1.0	6.9	0.4	85
CL105-3x1.5 - SO	5.2	1.0	7.2	0.5	104
CL105-4x1.5 - SO	5.7	1.0	7.7	0.5	122
CL105-5x1.5 - SO	6.3	1.1	8.5	0.6	150
CL105-7x1.5 - SO	6.9	1.1	9.1	0.6	187
CL105-12x1.5 - SO	9.4	1.2	11.8	0.8	299
CL105-14x1.5 - SO	9.9	1.2	12.3	0.8	337
CL105-19x1.5 - SO	11.1	1.2	13.5	0.9	432
CL105-24x1.5 - SO	13.3	1.3	15.9	1.0	558
CL105-27x1.5 - SO	13.6	1.3	16.2	1.1	611
CL105-37x1.5 - SO	15.6	1.4	18.4	1.2	828
CL105-2x2.5 - SO	5.8	1.0	7.8	0.5	116
CL105-3x2.5 - SO	6.2	1.0	8.2	0.5	145
CL105-4x2.5 - SO	6.9	1.1	9.1	0.6	183
CL105-5x2.5 - SO	7.6	1.1	9.8	0.6	214
CL105-7x2.5 - SO	8.4	1.1	10.6	0.7	271
CL105-12x2.5 - SO	11.3	1.3	13.9	0.9	446
CL105-19x2.5 - SO	13.6	1.3	16.2	1.1	668
CL105-27x2.5 - SO	16.7	1.5	19.7	1.3	958
CL105-37x2.5 - SO	18.9	1.6	22.1	1.4	1264
COLOR CODED					
CL105-2Gx0.5 - SO	3.5	0.9	5.3	0.3	48
CL105-3Gx0.5 - SO	3.7	0.9	5.5	0.4	55
CL105-5Gx0.5 - SO	4.5	1.0	6.5	0.4	79
CL105-2Gx1.0 - SO	4.2	1.0	6.2	0.4	66
CL105-3Gx1.0 - SO	4.5	1.0	6.5	0.4	78
CL105-5Gx1.0 - SO	5.4	1.0	7.4	0.5	110
CL105-2Gx1.5 - SO	4.9	1.0	6.9	0.4	85
CL105-3Gx1.5 - SO	5.2	1.0	7.2	0.5	104
CL105-5Gx1.5 - SO	6.3	1.1	8.5	0.6	150
CL105-2Gx2.5 - SO	5.8	1.0	7.8	0.5	116
CL105-3Gx2.5 - SO	6.2	1.0	8.2	0.5	145
CL105-5Gx2.5 - SO	7.6	1.1	9.8	0.6	214

Note: For installation guidelines refer to TE installation guidelines document WT1189

C-Lite CL105-PF/C-Lite CL105-TF

Multipair and Multitriple Unscreened Cables

The new C-Lite cable range is constructed from flame retarded halogen free primary wire and crosslinked sheath materials.

Offering size and weight savings over traditional cables. The new C-Lite cable range is suitable for use in general power, lighting, communication, control and instrumentation applications.

Field of application

Instrumentation and communication control
General power and lighting

Voltage class

0.6/1kV

Temperature class

90°C

Flame retarded

IEC 60332-1,-3

Cable jacket

Zerohal

Core Identification

Pairs

	Light Blue	White
1	1	2
2	3	4
3	5	6

Additional pairs numbered sequentially

Triples

	Red	Light Blue	White
1	1	2	3
2	4	5	6
3	7	8	9

Additional triples numbered sequentially

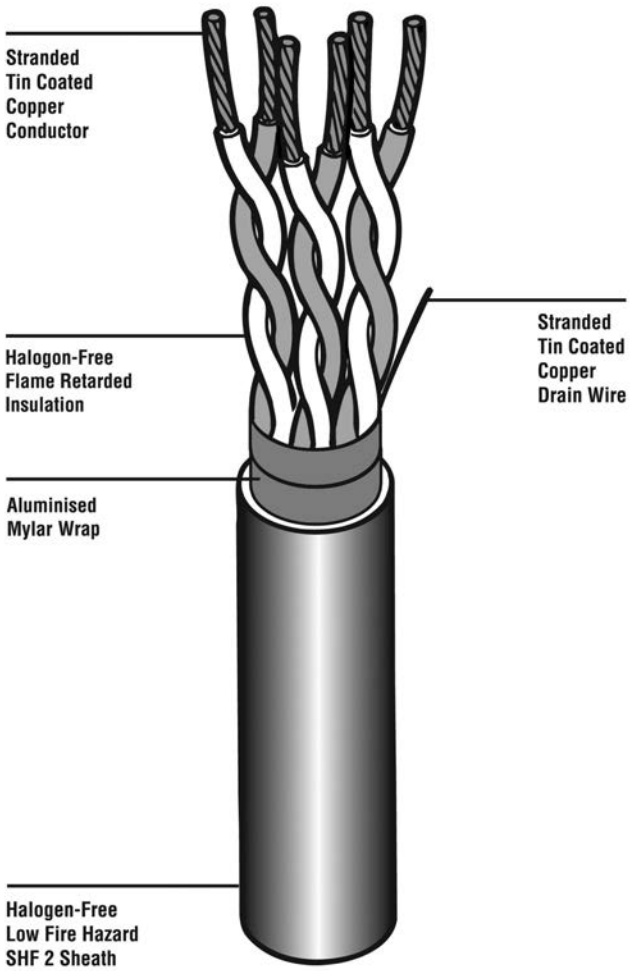

Approvals

DNV, LR, GL, ABS, KR, CCS, RMRS, NK, BV

Pending

RINA

Catalog 1654025
Revised 3-13

www.te.com

Dimensions are shown for reference purposes only. Specifications subject to change.

Dimensions are in millimeters unless otherwise specified.

USA: +1 800 522 6752
Asia Pacific: +86 0 400 820 6015
UK: +44 800 267 666

For additional support numbers please visit www.te.com

C-Lite CL105-PF/C-Lite CL105-TF (Continued)

Ordering Description	OD Under jacket (mm)	Nom Wall (mm)	Nom OD (mm)	Tolerance (mm)	Nom weight (kg/km)
PAIRS					
CL105-2x2x0.5 - PF	3.7	0.9	5.5	0.4	51
CL105-3x2x0.5 - PF	5.7	1.0	7.7	0.5	85
CL105-4x2x0.5 - PF	6.3	1.1	8.5	0.6	106
CL105-7x2x0.5 - PF	7.8	1.1	10	0.7	152
CL105-10x2x0.5 - PF	9.9	1.2	12.3	0.8	210
CL105-14x2x0.5 - PF	11.5	1.3	14.1	0.9	281
CL105-19x2x0.5 - PF	13.3	1.3	15.9	1.1	360
CL105-24x2x0.5 - PF	14.8	1.4	17.6	1.2	446
CL105-37x2x0.5 - PF	18.1	1.5	21.1	1.4	655
CL105-2x2x0.75 - PF	4.1	1.0	6.1	0.4	70
CL105-3x2x0.75 - PF	6.5	1.1	8.7	0.6	112
CL105-4x2x0.75 - PF	7.2	1.1	9.4	0.6	133
CL105-7x2x0.75 - PF	8.9	1.2	11.3	0.7	204
CL105-10x2x0.75 - PF	11.2	1.2	13.6	0.9	271
CL105-14x2x0.75 - PF	13	1.3	15.6	1.0	365
CL105-19x2x0.75 - PF	15	1.4	17.8	1.2	481
CL105-24x2x0.75 - PF	16.7	1.5	19.7	1.3	597
CL105-37x2x0.75 - PF	20.6	1.6	23.8	1.5	881
CL105-2x2x1.0 - PF	4.4	1.0	6.4	0.4	79
CL105-3x2x1.0 - PF	7.1	1.1	9.3	0.6	128
CL105-4x2x1.0 - PF	7.9	1.1	10.1	0.7	154
CL105-7x2x1.0 - PF	9.8	1.2	12.2	0.8	239
CL105-10x2x1.0 - PF	12.1	1.3	14.7	1.0	326
CL105-14x2x1.0 - PF	14.2	1.4	17	1.1	440
CL105-19x2x1.0 - PF	16.3	1.5	19.3	1.3	580
CL105-24x2x1.0 - PF	18.2	1.5	21.2	1.4	709
CL105-37x2x1.0 - PF	22.4	1.7	25.8	1.7	1064
CL105-2x2x1.5 - PF	5.2	1.0	7.2	0.5	105
CL105-3x2x1.5 - PF	8.4	1.1	10.6	0.7	181
CL105-4x2x1.5 - PF	9.3	1.2	11.7	0.8	218
CL105-7x2x1.5 - PF	11.6	1.3	14.2	0.9	332
CL105-10x2x1.5 - PF	14.2	1.4	17	1.1	452
CL105-14x2x1.5 - PF	16.6	1.5	19.6	1.3	613
CL105-19x2x1.5 - PF	19.2	1.6	22.4	1.5	810
CL105-24x2x1.5 - PF	21.4	1.7	24.8	1.6	1006
CL105-37x2x1.5 - PF	26.4	1.9	30.2	2.0	1511
TRIPLES					
CL105-2x3x0.75 - TF	7.1	1.1	9.3	0.6	126
CL105-4x3x0.75 - TF	8.5	1.1	10.7	0.7	182
CL105-7x3x0.75 - TF	10.5	1.2	12.9	0.8	283
CL105-10x3x0.75 - TF	15	1.4	17.8	1.2	412
CL105-15x3x0.75 - TF	17.5	1.5	20.5	1.3	601
CL105-2x3x1.5 - TF	9.1	1.2	11.5	0.7	191
CL105-4x3x1.5 - TF	10.9	1.2	13.3	0.9	290
CL105-7x3x1.5 - TF	13.5	1.3	16.1	1.0	453

Note: For installation guidelines refer to TE installation guidelines document WT1189

C-Lite CL105/PI/C-Lite CL105-TI

Multipair and Multitriple Individually Screened Cables

The new C-Lite cable range is constructed from flame retarded halogen free primary wire and crosslinked sheath materials.

Offering size and weight savings over traditional cables. The new C-Lite cable range is suitable for use in general power, lighting, communication, control and instrumentation applications.

Field of application

Instrumentation and communication control
General power and lighting

Voltage class

0.6/1kV

Temperature class

90°C

Flame retarded

IEC 60332-1,-3

Cable jacket

Zerohal

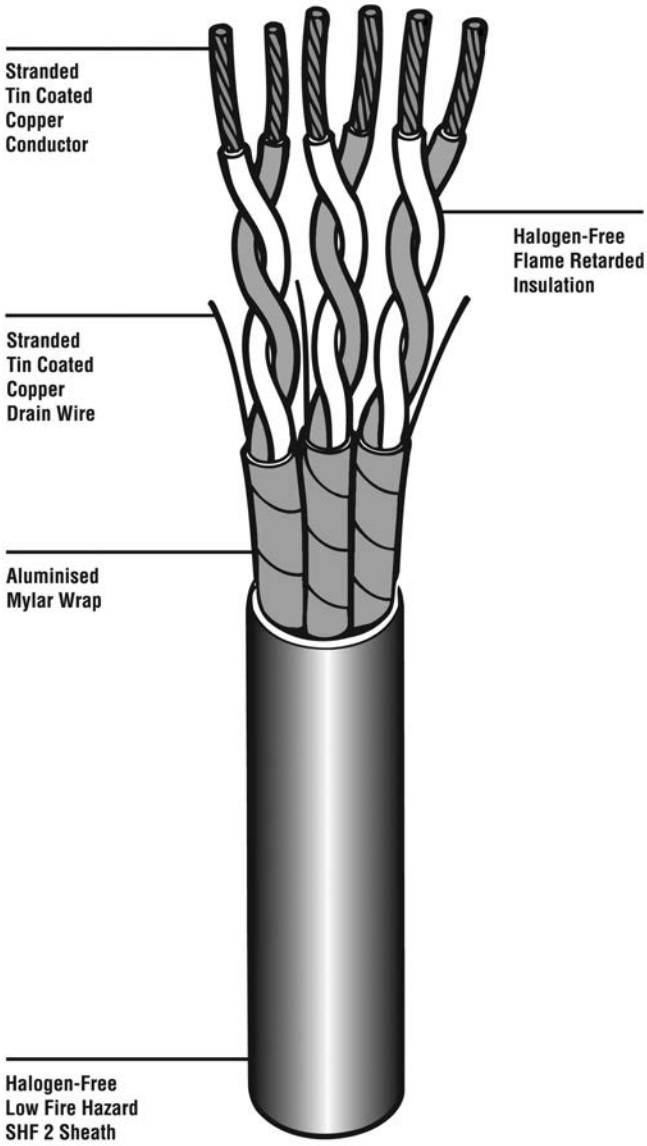

Core Identification

Pairs	Light Blue	White
1	1	2
2	3	4
3	5	6

Additional pairs numbered sequentially

Triples	Red	Light Blue	White
1	1	2	3
2	4	5	6
3	7	8	9

Additional triples numbered sequentially

Approvals

DNV, LR, GL, ABS, KR, CCS, RMRS, NK, BV

Pending

RINA

Catalog 1654025
Revised 3-13

www.te.com

Dimensions are shown for reference purposes only. Specifications subject to change.

Dimensions are in millimeters unless otherwise specified.

USA: +1 800 522 6752
Asia Pacific: +86 0 400 820 6015
UK: +44 800 267 666

For additional support numbers please visit www.te.com

C-Lite CL105/PI/C-Lite CL105-TI (Continued)

Ordering Description	OD Under jacket (mm)	Nom Wall (mm)	Nom OD (mm)	Tolerance (mm)	Nom weight (kg/km)
PAIRS					
CL105-1x2x0.5 - PI	3.2	0.9	5	0.3	41
CL105-2x2x0.5 - PI	6.1	1.0	8.1	0.5	87
CL105-3x2x0.5 - PI	6.3	1.1	8.5	0.6	103
CL105-4x2x0.5 - PI	7	1.1	9.2	0.6	126
CL105-7x2x0.5 - PI	8.7	1.1	10.9	0.7	185
CL105-10x2x0.5 - PI	10.1	1.2	12.5	0.8	255
CL105-14x2x0.5 - PI	11.9	1.3	14.5	0.9	347
CL105-19x2x0.5 - PI	13.8	1.4	16.6	1.1	462
CL105-24x2x0.5 - PI	15.5	1.4	18.3	1.2	566
CL105-37x2x0.5 - PI	19.2	1.6	22.4	1.5	856
CL105-1x2x0.75 - PI	3.4	0.9	5.2	0.3	46
CL105-2x2x0.75 - PI	6.9	1.1	9.1	0.6	112
CL105-3x2x0.75 - PI	7.1	1.1	9.3	0.6	132
CL105-4x2x0.75 - PI	7.9	1.1	10.1	0.7	164
CL105-7x2x0.75 - PI	9.9	1.2	12.3	0.8	250
CL105-10x2x0.75 - PI	11.4	1.3	14	0.9	344
CL105-14x2x0.75 - PI	13.4	1.3	16	1.0	462
CL105-19x2x0.75 - PI	15.7	1.4	18.5	1.2	616
CL105-24x2x0.75 - PI	17.5	1.5	20.5	1.3	769
CL105-37x2x0.75 - PI	21.8	1.7	25.2	1.6	1164
CL105-1x2x1.0 - PI	3.7	0.9	5.5	0.4	55
CL105-2x2x1.0 - PI	7.5	1.1	9.7	0.6	133
CL105-3x2x1.0 - PI	7.7	1.1	9.9	0.6	159
CL105-4x2x1.0 - PI	8.6	1.1	10.8	0.7	198
CL105-7x2x1.0 - PI	10.7	1.2	13.1	0.9	306
CL105-10x2x1.0 - PI	12.4	1.3	15	1.0	423
CL105-14x2x1.0 - PI	14.6	1.4	17.4	1.1	579
CL105-19x2x1.0 - PI	17.1	1.5	20.1	1.3	773
CL105-24x2x1.0 - PI	19.1	1.6	22.3	1.4	965
CL105-37x2x1.0 - PI	23.7	1.7	27.1	1.8	1448
CL105-1x2x1.5 - PI	4.4	1.0	6.4	0.4	73
CL105-2x2x1.5 - PI	8.8	1.2	11.2	0.7	179
CL105-3x2x1.5 - PI	9.1	1.2	11.5	0.7	211
CL105-4x2x1.5 - PI	10.1	1.2	12.5	0.8	265
CL105-7x2x1.5 - PI	12.6	1.3	15.2	1.0	406
CL105-10x2x1.5 - PI	14.6	1.4	17.4	1.1	562
CL105-14x2x1.5 - PI	17.2	1.5	20.2	1.3	769
CL105-19x2x1.5 - PI	20.1	1.6	23.3	1.5	1027
CL105-24x2x1.5 - PI	22.5	1.7	25.9	1.7	1283
CL105-37x2x1.5 - PI	27.9	1.9	31.7	2.1	1943
TRIPLES					
CL105-1x3.0.75 - TI	3.7	0.9	5.5	0.4	54
CL105-2x3x0.75 - TI	7.4	1.1	9.6	0.6	132
CL105-4x3x0.75 - TI	8.9	1.2	11.3	0.7	209
CL105-7x3x0.75 - TI	11.1	1.2	13.5	0.9	309
CL105-10x3x0.75- TI	14.7	1.4	17.5	1.1	449
CL105-15x3x0.75 - TI	17.3	1.5	20.3	1.3	664
CL105-1x3x1.5 - TI	4.7	1.0	6.7	0.4	88
CL105-2x3x1.5 - TI	9.5	1.2	11.9	0.8	213
CL105-4x3x1.5 - TI	11.4	1.3	14	0.9	337
CL105-7x3x1.5 - TI	14.2	1.4	17	1.1	521

Note: For installation guidelines refer to TE installation guidelines document WT1189

C-Lite CL105/PO/C-Lite CL105-TO

Multipair and Multitriple Overall Screened Cables

The new C-Lite cable range is constructed from flame retarded halogen free primary wire and crosslinked sheath materials.

Offering size and weight savings over traditional cables. The new C-Lite cable range is suitable for use in general power, lighting, communication, control and instrumentation applications.

Field of application

Instrumentation and communication control
General power and lighting

Voltage class

0.6/1kV

Temperature class

90°C

Flame retarded

IEC 60332-1,-3

Cable jacket

Zerohal

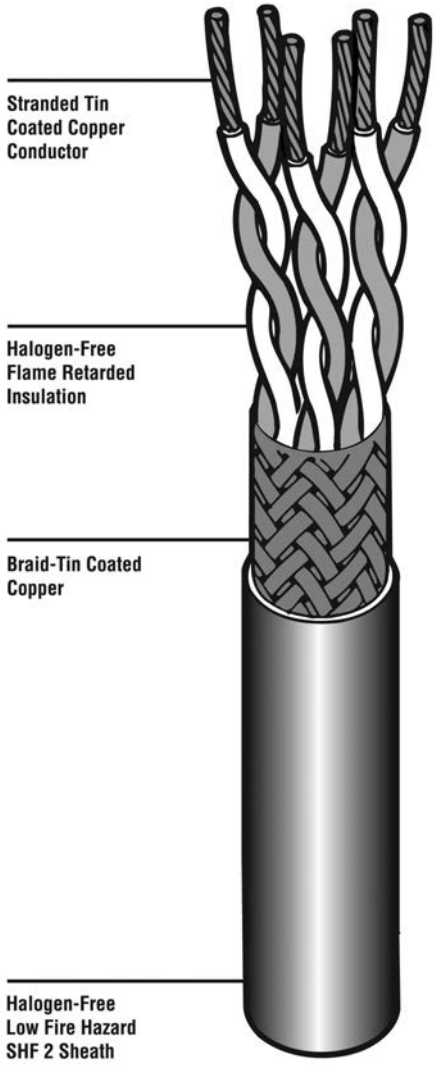

Core Identification

Pairs

	Light Blue	White
1	1	2
2	3	4
3	5	6

Additional pairs numbered sequentially

Triples

	Red	Light Blue	White
1	1	2	3
2	4	5	6
3	7	8	9

Additional triples numbered sequentially

Approvals

DNV, LR, GL, ABS, KR, CCS, RMRS, NK, BV

Pending

RINA

Catalog 1654025
Revised 3-13

www.te.com

Dimensions are shown for reference purposes only. Specifications subject to change.

Dimensions are in millimeters unless otherwise specified.

USA: +1 800 522 6752
Asia Pacific: +86 0 400 820 6015
UK: +44 800 267 666

For additional support numbers please visit www.te.com

C-Lite CL105/PO/C-Lite CL105-TO (Continued)

Ordering Description	OD Under jacket (mm)	Nom Wall (mm)	Nom OD (mm)	Tolerance (mm)	Nom weight (kg/km)
PAIRS					
CL105-1x2x0.5 - PO	3.5	0.9	5.3	0.3	48
CL105-2x2x0.5 - PO	4.1	1.0	6.1	0.4	68
CL105-3x2x0.5 - PO	6.2	1.1	8.4	0.6	109
CL105-4x2x0.5 - PO	6.9	1.1	9.1	0.6	130
CL105-7x2x0.5 - PO	8.3	1.1	10.5	0.7	178
CL105-10x2x0.5 - PO	9.6	1.2	12	0.8	236
CL105-14x2x0.5 - PO	11.2	1.3	13.8	0.9	312
CL105-19x2x0.5 - PO	13	1.3	15.6	1.0	412
CL105-24x2x0.5 - PO	14.5	1.4	17.3	1.2	504
CL105-37x2x0.5 - PO	18.1	1.5	21.1	1.4	754
CL105-1x2x0.75 - PO	3.9	1.0	5.9	0.4	60
CL105-2x2x0.75 - PO	4.6	1.0	6.6	0.4	82
CL105-3x2x0.75 - PO	7	1.1	9.2	0.6	134
CL105-4x2x0.75 - PO	7.7	1.1	9.9	0.6	162
CL105-7x2x0.75 - PO	9.4	1.2	11.8	0.8	232
CL105-10x2x0.75 - PO	10.8	1.2	13.2	0.9	301
CL105-14x2x0.75 - PO	12.8	1.3	15.4	1.0	416
CL105-19x2x0.75 - PO	14.8	1.4	17.6	1.1	541
CL105-24x2x0.75 - PO	16.7	1.5	19.7	1.3	688
CL105-37x2x0.75 - PO	20.7	1.6	23.9	1.6	1029
CL105-1x2x1.0 - PO	4.2	1.0	6.2	0.4	66
CL105-2x2x1.0 - PO	4.9	1.0	6.9	0.4	93
CL105-3x2x1.0 - PO	7.6	1.1	9.8	0.6	154
CL105-4x2x1.0 - PO	8.4	1.1	10.6	0.7	186
CL105-7x2x1.0 - PO	10.3	1.2	12.7	0.8	269
CL105-10x2x1.0 - PO	11.8	1.3	14.4	0.9	360
CL105-14x2x1.0 - PO	13.9	1.4	16.7	1.1	496
CL105-19x2x1.0 - PO	16.3	1.5	19.3	1.3	669
CL105-24x2x1.0 - PO	18.2	1.5	21.2	1.4	809
CL105-37x2x1.0 - PO	22.5	1.7	25.9	1.7	1226
CL105-1x2x1.5 - PO	4.9	1.0	6.9	0.4	85
CL105-2x2x1.5 - PO	5.7	1.0	7.7	0.5	122
CL105-3x2x1.5 - PO	8.9	1.2	11.3	0.7	206
CL105-4x2x1.5 - PO	9.9	1.2	12.3	0.8	251
CL105-7x2x1.5 - PO	12.1	1.3	14.7	1.0	367
CL105-10x2x1.5 - PO	14	1.4	16.8	1.1	508
CL105-14x2x1.5 - PO	16.6	1.5	19.6	1.3	703
CL105-19x2x1.5 - PO	19.1	1.6	22.3	1.4	915
CL105-24x2x1.5 - PO	21.6	1.7	25	1.6	1161
CL105-37x2x1.5 - PO	26.5	1.9	30.3	2.0	1703
TRIPLES					
CL105-1x3x0.75 - TO	4.2	1.0	6.2	0.4	69
CL105-2x3x0.75 - TO	7.7	1.1	9.9	0.6	152
CL105-4x3x0.75 - TO	9.1	1.2	11.5	0.7	223
CL105-7x3x0.75 - TO	11.2	1.2	13.6	0.9	318
CL105-10x3x0.75 - TO	14.8	1.4	17.6	1.1	472
CL105-15x3x0.75 - TO	17.4	1.5	20.4	1.3	697
CL105-1x3x1.5 - TO	5.2	1.0	7.2	0.5	104
CL105-2x3x1.5 - TO	9.7	1.2	12.1	0.8	231
CL105-4x3x1.5 - TO	11.5	1.3	14.1	0.9	342
CL105-7x3x1.5 - TO	14.3	1.4	17.1	1.1	520

Note: For installation guidelines refer to TE installation guidelines document WT1189

C-Lite CL105-PIO/C-Lite CL105-TIO

Multipair and Multitriple Individually and Overall Screened Cables

The new C-Lite cable range is constructed from flame retarded halogen free primary wire and crosslinked sheath materials.

Offering size and weight savings over traditional cables. The new C-Lite cable range is suitable for use in general power, lighting, communication, control and instrumentation applications.

Field of application

Instrumentation and communication control
General power and lighting

Voltage class

0.6/1kV

Temperature class

90°C

Flame retarded

IEC 60332-1,-3

Cable jacket

Zerohal

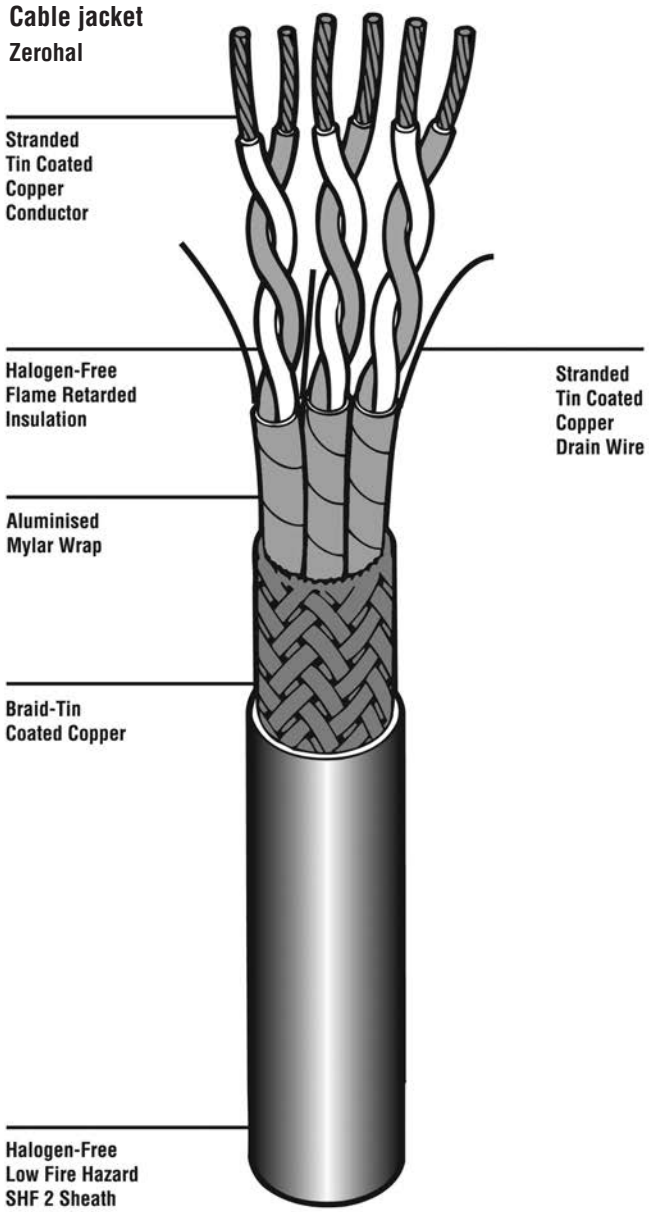

Core Identification

Pairs	Light Blue	White
1	1	2
2	3	4
3	5	6

Additional pairs numbered sequentially

Triples	Red	Light Blue	White
1	1	2	3
2	4	5	6
3	7	8	9

Additional triples numbered sequentially

Approvals

DNV, LR, GL, ABS, KR, CCS, RMRS, NK, BV

Pending

RINA

Catalog 1654025
Revised 3-13

www.te.com

Dimensions are shown for reference purposes only. Specifications subject to change.

Dimensions are in millimeters unless otherwise specified.

USA: +1 800 522 6752
Asia Pacific: +86 0 400 820 6015
UK: +44 800 267 666

For additional support numbers please visit www.te.com

C-Lite CL105-PIO/C-Lite CL105-TIO (Continued)

Ordering Description	OD Under jacket (mm)	Nom Wall (mm)	Nom OD (mm)	Tolerance (mm)	Nom weight (kg/km)
PAIRS					
CL105-1x2x0.5 - PIO	3.7	0.9	5.5	0.4	56
CL105-2x2x0.5 - PIO	6.7	1.1	8.9	0.6	117
CL105-3x2x0.5 - PIO	6.9	1.1	9.1	0.6	132
CL105-4x2x0.5 - PIO	7.6	1.1	9.8	0.6	155
CL105-7x2x0.5 - PIO	9.3	1.2	11.7	0.8	230
CL105-10x2x0.5 - PIO	10.7	1.2	13.1	0.9	300
CL105-14x2x0.5 - PIO	12.6	1.3	15.2	1.0	413
CL105-19x2x0.5 - PIO	14.5	1.4	17.3	1.1	538
CL105-24x2x0.5 - PIO	16.4	1.5	19.4	1.3	684
CL105-37x2x0.5 - PIO	20.3	1.6	23.5	1.5	1023
CL105-1x2x0.75 - PIO	4.1	1.0	6.1	0.4	68
CL105-2x2x0.75 - PIO	7.5	1.1	9.7	0.6	144
CL105-3x2x0.75 - PIO	7.7	1.1	9.9	0.6	165
CL105-4x2x0.75 - PIO	8.5	1.1	10.7	0.7	200
CL105-7x2x0.75 - PIO	10.5	1.2	12.9	0.8	294
CL105-10x2x0.75 - PIO	12	1.3	14.6	0.9	395
CL105-14x2x0.75 - PIO	14.1	1.4	16.9	1.1	544
CL105-19x2x0.75 - PIO	16.6	1.5	19.6	1.3	735
CL105-24x2x0.75 - PIO	18.4	1.5	21.4	1.4	891
CL105-37x2x0.75 - PIO	22.9	1.7	26.3	1.7	1352
CL105-1x2x1.0 - PIO	4.4	1.0	6.4	0.4	78
CL105-2x2x1.0 - PIO	8.1	1.1	10.3	0.7	167
CL105-3x2x1.0 - PIO	8.3	1.1	10.5	0.7	194
CL105-4x2x1.0 - PIO	9.2	1.2	11.6	0.8	243
CL105-7x2x1.0 - PIO	11.3	1.3	13.9	0.9	360
CL105-10x2x1.0 - PIO	13.1	1.3	15.7	1.0	492
CL105-14x2x1.0 - PIO	15.5	1.4	18.3	1.2	682
CL105-19x2x1.0 - PIO	18	1.5	21	1.4	891
CL105-24x2x1.0 - PIO	20.2	1.6	23.4	1.5	1131
CL105-37x2x1.0 - PIO	24.8	1.8	28.4	1.8	1665
CL105-1x2x1.5 - PIO	5.1	1.0	7.1	0.5	96
CL105-2x2x1.5 - PIO	9.4	1.2	11.8	0.8	219
CL105-3x2x1.5 - PIO	9.7	1.2	12.1	0.8	252
CL105-4x2x1.5 - PIO	10.7	1.2	13.1	0.9	310
CL105-7x2x1.5 - PIO	13.3	1.3	15.9	1.0	476
CL105-10x2x1.5 - PIO	15.5	1.4	18.3	1.2	664
CL105-14x2x1.5 - PIO	18.1	1.5	21.1	1.4	889
CL105-19x2x1.5 - PIO	21.2	1.6	24.4	1.6	1200
CL105-24x2x1.5 - PIO	23.6	1.7	27	1.8	1476
CL105-37x2x1.5 - PIO	29	2.0	33	2.1	2197
TRIPLES					
CL105-1x3x0.75 - TIO	4.4	1.0	6.4	0.4	62
CL105-2x3x0.75 - TIO	8	1.1	10.2	0.7	166
CL105-4x3x0.75 - TIO	9.5	1.2	11.9	0.8	249
CL105-7x3x0.75 - TIO	11.7	1.3	14.3	0.9	365
CL105-10x3x0.75 - TIO	15.6	1.4	18.4	1.2	552
CL105-15x3x0.75 - TIO	18.2	1.5	21.2	1.4	784
CL105-1x3x1.5 - TIO	5.4	1.0	7.4	0.5	113
CL105-2x3x1.5 - TIO	10.1	1.2	12.5	0.8	255
CL105-4x3x1.5 - TIO	12	1.3	14.6	0.9	388
CL105-7x3x1.5 - TIO	14.9	1.4	17.7	1.2	599

Note: For installation guidelines refer to TE installation guidelines document WT1189

C-Lite Cables

Primary Wire (Switchboard Cable)

The new C-Lite cable range is constructed from flame retarded halogen free primary wire and crosslinked sheath materials.

Offering size and weight savings over traditional cables. The new C-Lite cable range is suitable for use in general power, lighting, communication, control and instrumentation applications.

Field of application

Instrumentation and communication control
General power and lighting

Voltage class

0.6/1kV

Temperature class

90°C

Flame retarded

IEC 60332-1,-3

Cable jacket

Zerohal

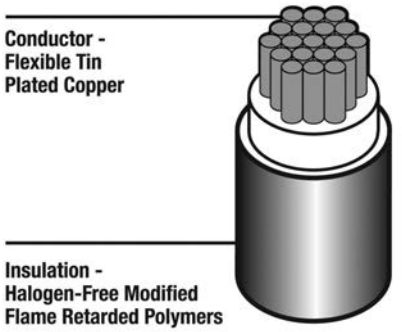

Approvals

DNV, LR, GL, ABS, KR, CCS, RMRS, NK, BV

Pending

RINA

	Conductor		Finished Wire		
Part Number (CL105-)	Standing No' Dia (mm)	Max Diameter (mm)	Maximum Resistance @ 20°C (ohm/km)	Nominal Diameter (mm)	Nominal Weight (kg/km)
Metric Cross Section					
0111-0.50-*	19/0.18	0.90	40.1	1.40	6.60
0111-0.75-*	19/0.23	1.15	26.7	1.60	8.90
0111-1.00-*	19/0.25	1.26	20.0	1.75	10.7
0111-1.50-*	37/0.23	1.58	13.7	2.08	16.0
0111-2.50-*	37/0.29	2.01	8.21	2.55	25.7
0111-4.00-*	56/0.30	2.57	4.89	3.09	43.6
0111-6.00-*	84/0.31	3.05	3.16	3.95	58.3
0111-10.00-*	80/0.41	4.00	1.95	4.95	100.0
AWG Cross Section					
0111-0.25-*(24AWG)	19/0.13	0.63	84.32	1.14	3.59
0111-0.40-*(22AWG)	19/0.16	0.79	50.5	1.33	5.20
0111-0.60-*(20AWG)	19/0.20	1.01	31.1	1.52	7.40
0111-1.00-*(18AWG)	19/0.25	1.26	20.0	1.75	10.7
0111-1.20-*(16AWG)	19/0.29	1.42	15.3	1.93	13.6
0111-2.00-*(14AWG)	37/0.25	1.82	10.5	2.36	20.3
0111-3.00-*(12AWG)	37/0.32	2.24	6.58	2.78	31.0

Color Code: The *in the part number shall be replaced by a standard color code designator in accordance with Mil-Std-681

White preferred other colors available on request e.g. CL105-0111-0.5-9 White Insulation

Performance Requirements: To be tested to and meet the requirements of the issue in effect of DNV Type Approval Programme No. 6-827.11-1 (excluding sizes less than 0.5mm²) Note: For installation guidelines refer to TE installation guidelines document WT1189.

C-Lite Approvals

Approval Body	Approval System	Certificate Numbers
Det Norske Veritas (DNV)	Type Approval Program No. 6-827.11.1	E-7276, E-7277,E-7278, E-7279, E-7280, E-7281
Lloyds Register (LR)	2002 Type Approval System	99/0154(E1)
Germanischer Lloyd (GL)	Type Approval System	33 106-6 HH, 33 108-6 HH
American Bureau of Shipping (ABS)	Type Approval Program	06-LB158945-PDA
Korean Register (KR)	Type Approval	LDN20867-EL001
Russian Register of Shipping (RMRS)	Type Approval	07.04389.260, 07.04390.260, 07.04392.260, 07-04393.260 07.04394.260, 07-04395.260
China Classification Society (CCS)	Type Approval	LD07W00001
Nippon Kaiji Kyokai (NK)	Type Approval	TA07631M; TA07630M
Pending		
Bureau Veritas (BV)		
Registro Italiano Navale (RINA)		

Additional Type Approvals on request

Catalog 1654025
Revised 3-13

www.te.com

Dimensions are shown for reference purposes only. Specifications subject to change.

Dimensions are in millimeters unless otherwise specified.

USA: +1 800 522 6752
Asia Pacific: +86 0 400 820 6015
UK: +44 800 267 666

For additional support numbers please visit www.te.com

C-Lite Cables (Continued)

Technical Information

Current Carrying Capacity

Current carrying capacity is defined as the continuous current which when passed through a wire will increase the temperature of the conductor from a specific ambient temperature to the maximum temperature rating of the insulation/sheath.

Temperature Rise v Current Guide

For Type CL105 in free air (single core)

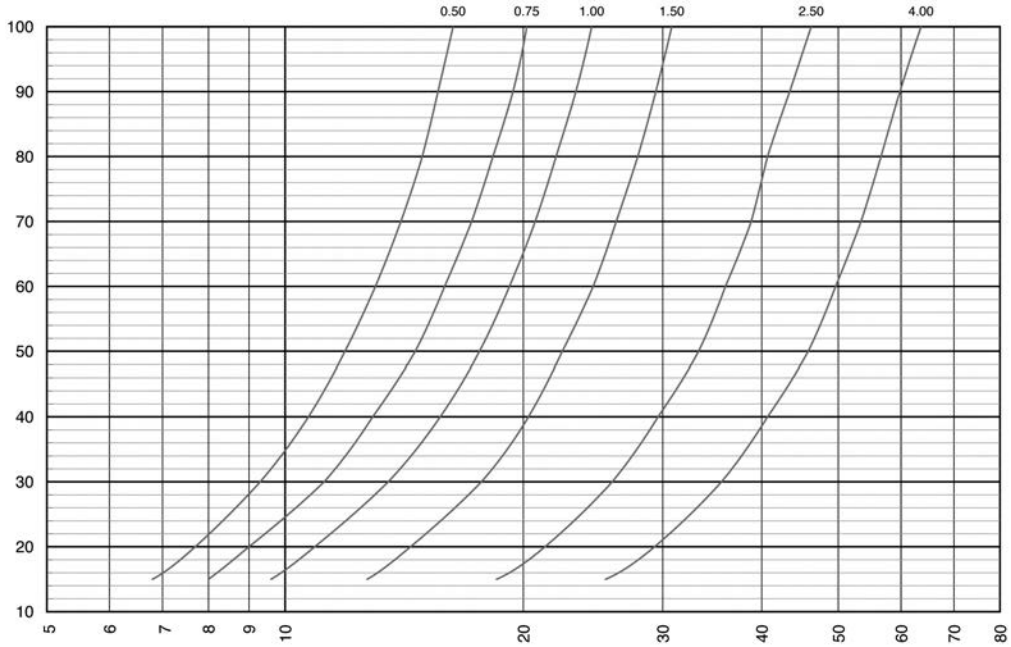

No of cores	Derating Factor
2	0.825
3	0.73
4	0.66
7	0.54
9	0.49
12	0.43
15	0.39
18	0.36
21	0.33
24	0.31
27	0.29
30	0.28
37	0.26

Short Circuit Current

The short circuit current is based on the material the wire is made of, the cross sectional area of the wire and the maximum temperature rating of the insulation material. The short circuit current for a given wire size is provided in the table as constant current for a given amount of time.

Cross-Section of the conductor in mm²	Duration of short circuit in seconds.				
	0.2	0.5	1.0	2.0	3.0
0.5	122	77	54	38	31
0.75	183	115	82	58	47
1.0	243	154	109	77	63
1.5	365	231	163	115	94
2.5	609	385	272	192	157
4.0	974	616	435	308	251
	Short circuit current in Amps				

Dimensions are shown for reference purposes only. Specifications subject to change.

Dimensions are in millimeters unless otherwise specified.

USA: +1 800 522 6752
Asia Pacific: +86 0 400 820 6015
UK: +44 800 267 666

For additional support numbers please visit www.te.com

C-Lite Cables (Continued)

Specification Summary

Examination or test	Test basis	Requirements	Test on
General properties			
Braid coverage	IEC 60092-350	90% minimum coverage density	Cable
Metallic coating of copper conductors	IEC 60092-350 by inspection	Conductor surface will be smooth and uniform. Insulation will not adhere to the conductor.	Conductor
Physical properties			
Tensile strength and ultimate elongation	IEC 60811-1-1	20MPa minimum, 150% minimum (insulation) (speed 50±10 mm/min)	Insulation
Scrape abrasion resistance	NF F 63-808	500 cycles minimum (5N load, 0.45 mm diameter rod, 20°C, 55 cycles/minute)	Core
Dynamic cut through	NF F 63-808	50N minimum (90° 0.13 mm radius blade, 20°C, 100g/s load)	Core
Notch propagation	NF F 63-808	No dielectric breakdown (0.05 mm notch, 6X mandrel, 1.5kV ac for 1 minute)	Core
Mechanical/particular characteristic of sheathing compounds	IEC 60092-350, 12.4 IEC 60092-359 Table II & III	SHF1 or SHF2	Sheath
Thermal properties			
Lifetime	BS 3G230	>20000h @ 120°C	Core
Accelerated ageing	IEC 60811-1-2	No cracks, no dielectric breakdown (168h @ 150°C, 1.5kV ac for 5 minutes)	Core
Insulation blocking	NF F 63-808	Cores must be easily separated (6h @ 150°C)	Core
Cold bend (Where outer diameter <12.5 mm)	IEC 60811-1-4	No cracks, no dielectric breakdown (-30°C, 10X mandrel, 1.5kV ac for 5 mins for 1m core) (-30°C, 10X mandrel, 3.5kV ac for 5 min. Sample of cable)	 Core Cable
Current overload	BS 3G230	No cracks, no dielectric breakdown (30s @ 250°C, 6X mandrel, wind as in lifetime test, 1.5kV ac for 5 minutes)	Core
Electrical properties			
AC and DC voltage tests	IEC 60092-350	No dielectric breakdown (3.5kV ac/8.4kV dc for 5 minutes for 1m of core) (3.5kV ac/8.4kV dc for 5 minutes for each delivery length of cable)	 Core Cable
Insulation – continuity proof test	IEC 60092-350 Clause 10.3b	No dielectric breakdown At least 8kV impulse, 8kV dc or 3.5kV ac	Core
Insulation resistance at 20°C	IEC 60092-350	500MΩkM min. @ 20°C (5m length, quote actual IR)	Core
Insulation resistance at 90°C	IEC 60092-350	1.5MΩkM min @ 90°C (5m length, quote actual IR)	Core
Increase in a.c. capacitance after immersion in water	IEC 60092-350	C_{14}-C_1≤0.15 C_1, C_{14}-C_7 ≤0.05C_7 (14 days @ 50°C in tap water)	Core
Environmental properties			
Ozone resistance	IEC 60092-350 IEC 60811-2-1	No crazing or cracking (250-300ppm, 25°C, 30h)	Core
Fluid immersion: 72h @ 70°C – IRM 902, IRM 903, Diesel (F-76), 3.5% salt water	BS 3G230	No cracking or dielectric breakdown 5% max, swell (6X mandrel, soak in water, 1.5kV ac for 5 minutes)	Core
Fire hazard properties			
Flammability – small scale	IEC 60332-1	Charring confined between 50mm and 540mm from lower edge of top support (Single vertical wire)	Core
Flammability – large scale	IEC 60332-3	Category A, designation F	Cable
Halogen content	IEC 60684-2 cl, 45	Less than 0.5% for each non metallic component	Cable
Toxicity index	IMO FTPC Appendix 3	It of less than 2, report Lc value	Cable
Smoke emission – small scale	ISO 5659-2 Appendix 3	Ds4 150 max. and Dmax 150 max. VOF4 300 max.	Core
Smoke emission – Large scale	IEC 61034-2	70% minimum transmittance	Cable

Note: For installation guidelines refer to TE installation guidelines document WT1189

C-Lite Cables (Continued)

Part Numbering System

CL 105 - 3 G x 0.5 - S U

Component Construction
I - Foil wrapped components, overall unshielded* cable
IO - Foil wrapped components, overall shielded* cable
F - Unshielded* components, overall foil wrapped cable
O - Unshielded* components, overall shielded* cable
U - Unshielded* components, overall unshielded* cable

Component Type
P - Pair
T - Trio
S - Single

Conductor Size (in mm)

Core Identification
G - Color coded cores
(No designator defaults to standard colors, light blue and white)

Number of Components
Standard construction - number of conductors
Example: 2 = 2 conductors
3 = 3 conductors

Complex construction - number of component cables x number of wires in the component cable
Example: 3x2 = 3 twisted pairs
7x3 = 7 twisted triples

Product Type
90 - meets requirements of SHF1
105 - meets requirements of SHF2

Basic Product Number

*also referred to as screened or unscreened

Catalog 1654025
Revised 3-13

www.te.com

Dimensions are shown for reference purposes only. Specifications subject to change.

Dimensions are in millimeters unless otherwise specified.

USA: +1 800 522 6752
Asia Pacific: +86 0 400 820 6015
UK: +44 800 267 666

For additional support numbers please visit www.te.com

C-Lite F (Fire Resistant) Cables

Product Facts

- **Halogen free**
- **Small size**
- **Lightweight**
- **Tough flexible construction**
- **Resistant to hot diesel fuels, oils, grease, drilling fluids, and mechanical abuse**
- **Meets flame retardant requirements of IEC 60332-3**
- **Controlled dimensions**
- **Mud resistant to NEK 606**
- **Fire resistant to IEC 60331-31 (1000˚C)**

Applications

TE is a major supplier in high performance cable systems to the offshore and industrial markets. Offshore applications include telecommunications, instrumentation and small power cables which represent approximately 80% of the total cable length on a platform.

Easy Design

C-Lite F cable consists of Raychem brand primary C-Lite FR Wire with a Zerohal-EN jacket and can be used throughout an offshore platform, simplifying the selection of cables for designers and electrical engineers.

Zerohal-EN Cables Generate Less Smoke

Zerohal-EN is a halogen-free cable jacket material, developed by TE and combines the good mechanical, environmental and electrical features of some conventional cables, with good fire hazard performance.

Until recently the flame retardance of cable jackets was achieved by the use of halogenated flame retardants that are effective fire suppressants, but which unfortunately produce dense smoke and corrosive acid gases when burned.

These effects are highly undesirable in a fire, causing corrosion damage to expensive and vital equipment, hindering evacuation and fire fighting and above all, endangering life.

Benefits of Zerohal-EN cable

- Highly flame retarded
- Low smoke generation
- Low toxicity index
- Low acid gas generation
- Operating temperature -40°C up to +120°C
- Low water uptake
- Compatible with Raychem brand heat-shrink components - heat-shrink tubing, molded parts and adhesives.

Smoke generation with time

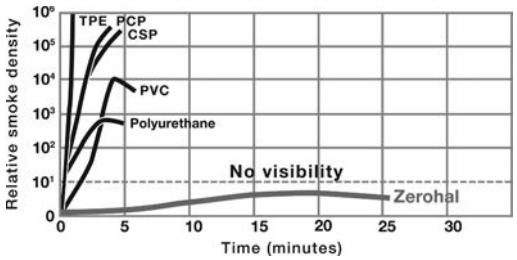

The 10% visibility line on the graph indicates the density of smoke (measured in the NBS smoke chamber) which would cause human disorientation and confusion.

Available in:	Americas	Europe	Asia Pacific
		■	

Catalog 1654025
Revised 3-13

www.te.com

Dimensions are shown for reference purposes only. Specifications subject to change.

Dimensions are in millimeters unless otherwise specified.

USA: +1 800 522 6752
Asia Pacific: +86 0 400 820 6015
UK: +44 800 267 666

For additional support numbers please visit www.te.com

C-Lite F (Fire Resistant) Cables (Continued)

Traditional Fire Resistant Cable

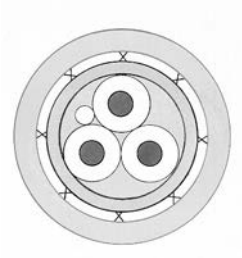

C-Lite F Cable

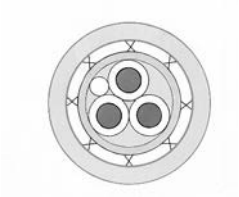

The illustration above shows a TE light weight cable on the right compared with a traditional offshore cable having the same cross-sectional area of copper. Both cables have the same number of conductors. A saving in size has been made on the insulation material, but without sacrificing the mechanical or electrical characteristics of the cable.

Cable trays

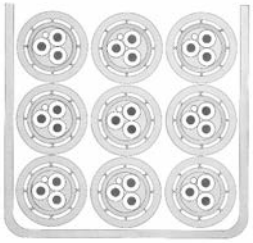

A typical saving in the cable tray volume can exceed 40%

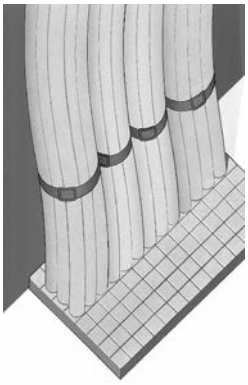

Transits

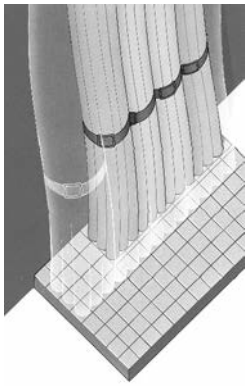

Over 40% savings in area

With more than 475 km of cabling on a typical large platform, there are potential savings of up to 105 tons topside by using C-Lite throughout the platform. The total cabling system, together with smaller cable glands, trays and transits can lead to overall weight savings of approximately 165 tons and cost savings in excess of 15%.

Designing Platforms

Platforms are becoming smaller and more sophisticated with an ever increasing complexity of electronic systems, sensors, communications and safety equipment. More cables are therefore required to fit into smaller spaces.

C-Lite F small size cable can be a distinct advantage over conventional cables.

Space saving when refurbishing platforms

As technology advances, engineers are called upon to update and modify existing systems or fit completely new ones.

To provide all the necessary interconnections, hundreds of multicore cables have to run throughout the platform. These, along with cables for power, lighting and instrumentation, create a severe space problem on cable trays, cable transits through fire walls, marshalling boxes and gland plates.

Using C-Lite F cable installation is easier because the cable is smaller, lighter, more flexible and has a reduced bend radius than conventional cables.

Lower total installed cost on new platforms

Weight is one of the key factors to consider when designing new platforms.

Reduced size and weight in cables allow for smaller and lighter gauge racking needing less support. Also, smaller transits and cable glands reduce material and installation costs. C-Lite F cable is easier to specify as it meets all the industry's essential requirements in one cable.

Benefits of using TE C-Lite F cable

- Cable can be used throughout the platform
- Smaller tray work/more cables per tray
- Lighter supports
- Smaller cable glands/ gland plate optimization
- More cables through transit blocks
- Time saving on installation
- Less cable accessories
- Less inventory
- Lower total installed cost
- Wide size range: 0.50-10.00mm^2

Dimensions are shown for reference purposes only. Specifications subject to change.

Dimensions are in millimeters unless otherwise specified.

USA: +1 800 522 6752
Asia Pacific: +86 0 400 820 6015
UK: +44 800 267 666

For additional support numbers please visit www.te.com

FlexLite Commercial Wire

Available in:

Americas	■
Europe	■
Asia Pacific	■

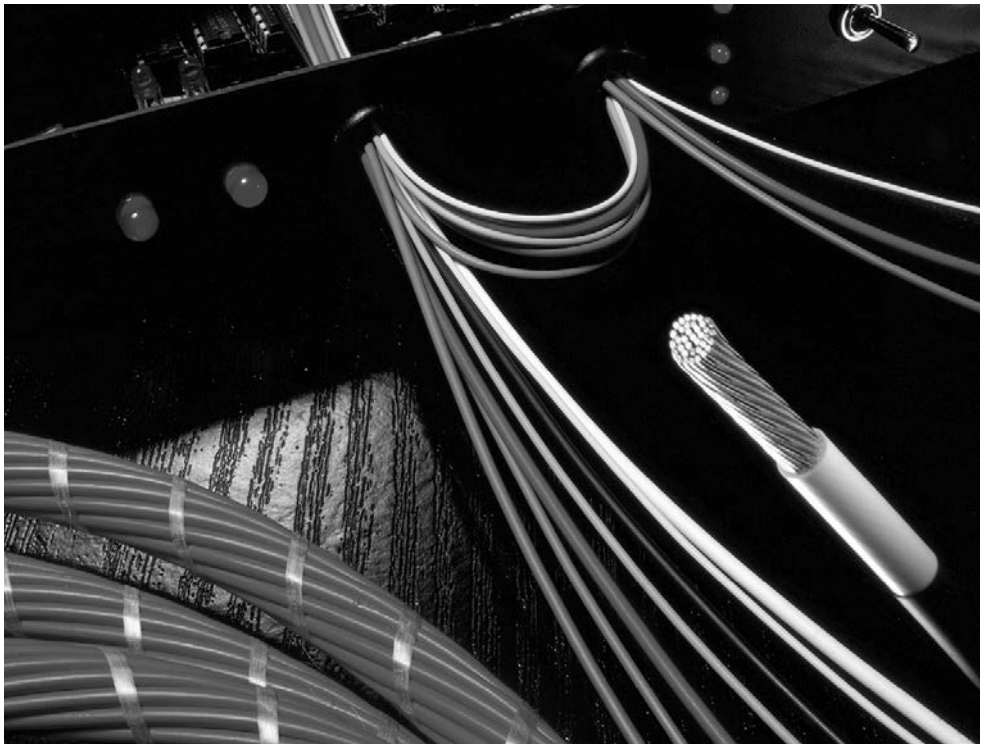

Selection Guide

Application	Temperature Rating (°C/°F)	Features and Benefits	Product Name
Intermittent-duty motors and heating elements	-45°C to 125°C -49°F to 257°F	■ Insulation that does not melt and flow at high temperatures ■ Excellent chemical resistance ■ VW-1	FlexLite DW
Electronics, appliance, and motor applications	-55°C to 135°C -67°F to 275°F	■ Small size, light weight ■ No plasticizers or corrosive outgassing	FlexLite TW
General purpose commercial and industrial	150°C	■ Excellent shop handling ■ Excellent chemical resistance ■ Non-melting insulation	FlexLite CW
Lighting, motor applications	-55°C to 200°C -67°F to 392°F	■ Insulation does not melt and flow at high temperature ■ VW-1 ■ Excellent shop handling ■ No cold-flow problems	FlexLite HT
Lighting, appliances, motors	-65°C to 250°C -85°F to 482°F	■ Very high temperature ■ VW-1 ■ Superb chemical resistance ■ Excellent shop handling	FlexLite TX

FlexLite/UL Style Cross-Reference

Primary Wire

Product	UL Style	Temperature Rating	Voltage Rating	AWG Range	Part Description
FlexLite DW*	3584	125°C [257°F]	600 volts	14-26	FLDWX031X
FlexLite TW	10208	135°C [275°F]	600 volts	10-28	FLTWX031X
FlexLite CW	10916	150°C [302°F]	600 volts	$0.35mm^2$=$2.50mm^2$	FLCW0219& 0211
FlexLite HT*	3557	200°C [392°F]	600 volts	12-26	FLHTX031X
FlexLite TX	10297	250°C [482°F]	600 volts	10-26	FLTXX031X

Note: Additional UL-recognized cable constructions are available. Please contact TE for details.
*Available in both metric and imperial sizes.

UL Marking and Labeling

All FlexLite products are UL labeled and reel marked. UL surface marking is additional. Please contact TE for further information.

Catalog 1654025
Revised 3-13

www.te.com

Dimensions are shown for reference purposes only. Specifications subject to change.

Dimensions are in millimeters unless otherwise specified.

USA: +1 800 522 6752
Asia Pacific: +86 0 400 820 6015
UK: +44 800 267 666

For additional support numbers please visit www.te.com

FlexLite (Continued)

Part Numbering System

FL XX X X X X X - Size - X/X - X

Basic Product Number

Product Type (UL Style - Temperature Rating)
CW - UL Style 3751 - 150˚C
DW - UL Style 3584 - 125˚C
TW - UL Style 10208 - 135˚C
HT - UL Style 3557 - 200˚C
TX - UL Style 10297 - 250˚C

Conductor Stranding
A - Solid
B - 7 strand
C - 19 strand
D - 37 strand
E - Rope Lay

Construction
0 - Primary wire; or unshielded & unjacketed cable
1 - Round braid shielded & jacketed cable*
6 - Special constructions

Class of Wire
1 - 150 volt
2 - 300 volt
3 - 600 volt

Number of Conductors
1 through 10 (designator for 10 conductor = 0)

Conductor Type
1 - Tin-coated copper
2 - Silver-coated copper
3 - Nickel coated copper
9 - Bare copper

Conductor Size (AWG) or (Metric)

Primary Wire Insulation Color (code per MIL-STD-681)

0 - Black	3 - Orange	6 - Blue	9 - White
1 - Brown	4 - Yellow	7 - Violet	
2 - Red	5 - Green	8 - Gray	

Jacket Color (code per MIL-STD-681)
(codes same as for Primary Wire Insulation Color)

Part Numbering System is a cross reference only and not meant for part creation.

*Shield coating same as conductor coating

Typical ordering example	19 strand, 20 AWG tin-coated copper, two component, shielded and jacketed cable, 600 volt, blue and white components, white jacket; part number FLDWC1321-20-6/9-9.
Ordering information	For product requiring CUR (Canadian UL) or CSA marking part numbering descriptions above MIGHT NOT apply. Please contact TE for further information.

FlexLite CW

General Purpose and Motor Lead Wire

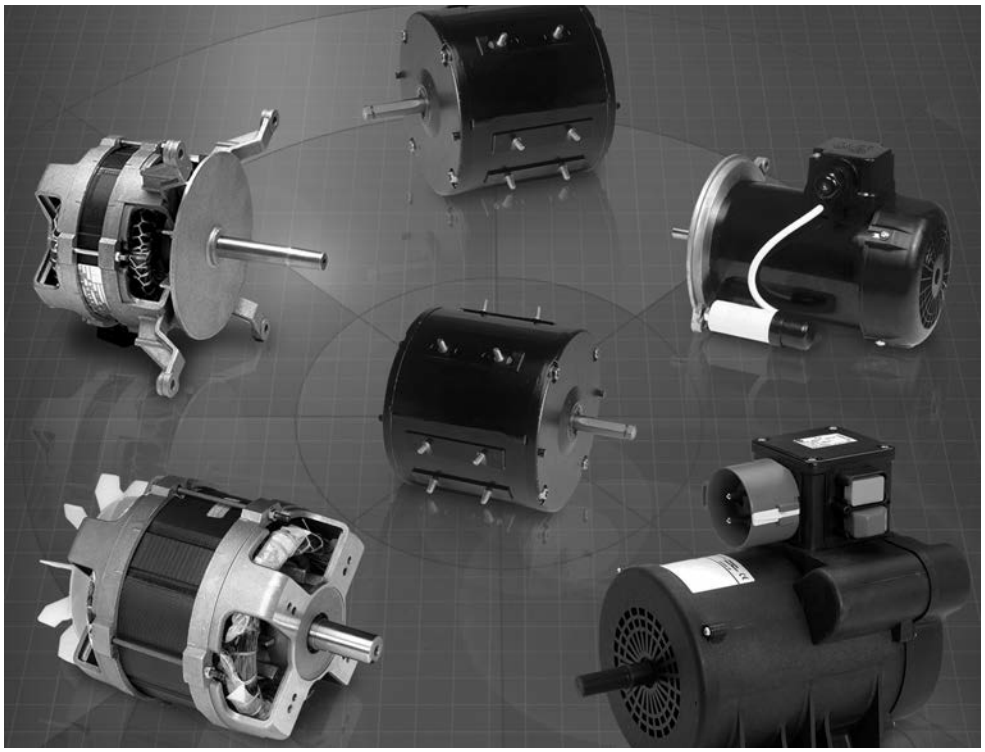

Product Facts

- UL rated operating temperature to 150°C [302°F]
- Non melting cross-linked insulation material provides current overload and resistance to short term thermal excursions
- Insulation offers excellent performance against most fluids, including lubricating oils, hydraulic fluids, cleaning fluids, acids and alkalis
- Varnish resistant for motor lead applications
- Excellent shop floor handling enables ease of termination and full compatibility with automatic cutting and stripping machines
- 600 volt rating exceeds most application needs
- Full range of sizes and colors available
- Thin wall product improves packaging possibilities

Applications

FlexLite CW (FLCW) is designed for general purpose Commercial and Industrial applications. This dual wire combines excellent flexibility, shop floor handling and stripping.

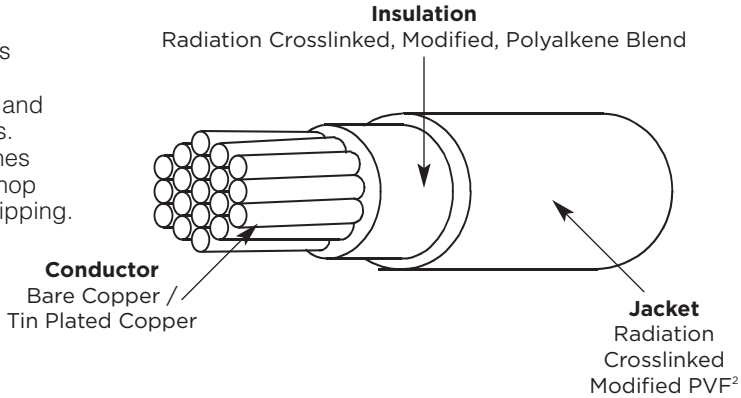

Specifications/Approvals

Series	UL
CW	Style 3751

Available in:	Americas	Europe	Asia Pacific
	■	■	■

Catalog 1654025
Revised 3-13

www.te.com

Dimensions are shown for reference purposes only. Specifications subject to change.

Dimensions are in millimeters unless otherwise specified.

USA: +1 800 522 6752
Asia Pacific: +86 0 400 820 6015
UK: +44 800 267 666

For additional support numbers please visit www.te.com

FlexLite CW (Continued)

Construction Details
Bare Copper Conductor -FLCW0219

	Conductor			Finished Wire				
					Diameter mm			
Part Number	Cross Sectional Area mm2	Nominal Stranding No / Dia mm	Diameter mm max	Conductor Resistance at 20°C Ω/km max	Lower Spec Limit	Target	Upper Spec Limit	Approx. Weight per Unit Length kg/km
FLCW0219-0.35-*	0.35	7/0.26	0.78	51.7	1.59	1.63	1.67	5.16
FLCW0219-0.50-*	0.50	19/0.19	0.95	36.9	1.76	1.80	1.84	6.9
FLCW0219-0.75-*	0.75	19/0.23	1.15	24.6	1.96	2.00	2.04	10.9
FLCW0219-1.00-*	1.00	19/0.26	1.30	18.40	2.11	2.15	2.19	11.6
FLCW0219-1.50-*	1.50	19/0.32	1.60	12.60	2.41	2.45	2.49	16.3
FLCW0219-2.50-*	2.5	19/0.41	2.05	7.56	2.86	2.94	2.94	25.70

Tin Plated Conductor -FLCW0211

	Conductor			Finished Wire						
					Insulation Thickness		Diameter mm			
Part Number	Cross Sectional Area mm²	Nominal Stranding No / Dia mm	Diameter mm max	Conductor Resistance at 20°C Ω/km max	Absolute Minimum mm	Minimum Average mm	Lower Spec Limit	Target	Upper Spec Limit	Nominal Weight per Unit Length kg/km
FLCW0211-0.35-*	0.35	7/0.25	0.79	50.9	0.28	0.36	1.60	1.64	1.68	5.22
FLCW0211-0.50-*	0.50	19/0.18	0.88	40.1	0.28	0.36	1.69	1.73	1.77	6.51
FLCW0211-0.75-*	0.75	19/0.23	1.08	24.7	0.28	0.36	1.89	1.93	1.97	8.99
FLCW0211-1.00-*	1.00	19/0.25	1.21	20.0	0.28	0.36	2.02	2.06	2.10	10.7
FLCW0211-1.50-*	1.50	19/0.32	1.51	12.5	0.28	0.36	2.32	2.36	2.40	15.8
FLCW0211-2.50-*	2.50	19/0.41	1.94	7.88	0.28	0.36	2.75	2.79	2.83	25.0

Ballis Resistor

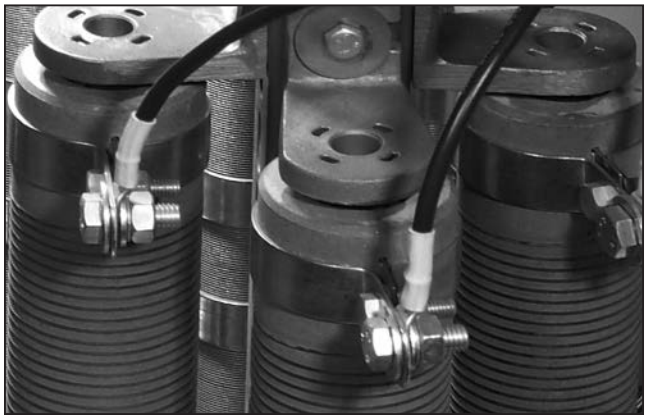

Coil

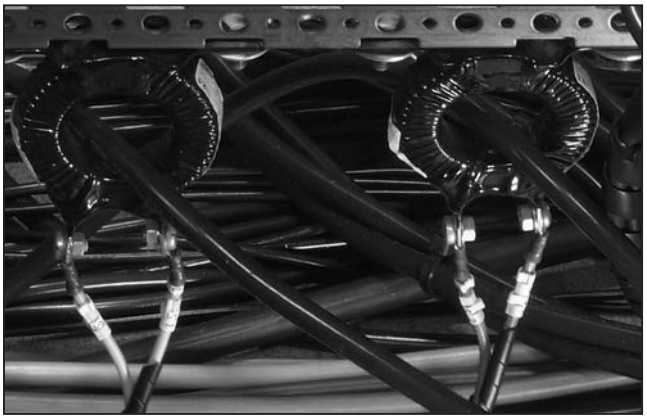

Radiation Cross-Linking

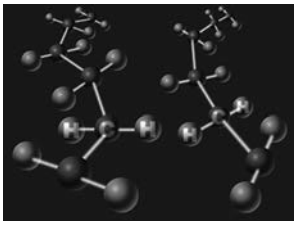

Molecular Chain

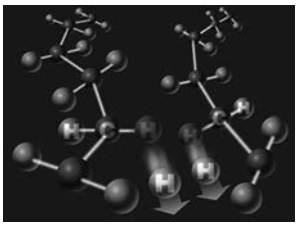

Crosslinking

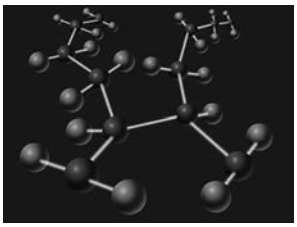

Crosslinked Molecular Chain

Dimensions are shown for reference purposes only. Specifications subject to change.

Dimensions are in millimeters unless otherwise specified.

USA: +1 800 522 6752
Asia Pacific: +86 0 400 820 6015
UK: +44 800 267 666

For additional support numbers please visit www.te.com

FlexLite DW

Dual-Wall Primary Wire

Product Facts

- UL rated operating temperature to 125°C [257°F]
- Non melting insulation material
- Thin-wall product for size and weight savings
- Excellent chemical resistance
- Dual-wall construction for increased mechanical performance
- Compatibility with automated stripping equipment
- Variety of colors and constructions

Applications

FlexLite DW (FLDW) offers a high-performance non melting insulation suitable for a variety of applications, especially those with occasional high-temperature excursions, such as high-power battery-operated devices or intermittent-duty motors or heating elements.

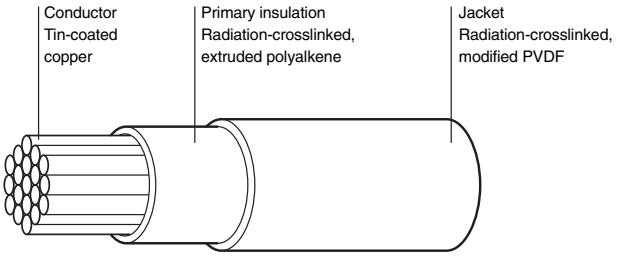

Specifications/Approvals

Series	UL	CUR	CSA	TE
DW	Style 3584 Flammability VW-1 Temperature rating 125°C [257°F]	Recognized	Certified AWMIA	WCD-3106

Available in:	Americas	Europe	Asia Pacific
	■	■	■

Catalog 1654025
Revised 3-13

www.te.com

Dimensions are shown for reference purposes only. Specifications subject to change.

Dimensions are in millimeters unless otherwise specified.

USA: +1 800 522 6752
Asia Pacific: +86 0 400 820 6015
UK: +44 800 267 666

For additional support numbers please visit www.te.com

FlexLite DW (Continued)

Construction Details

Part No.	Wire Size (AWG)	Conductor Stranding (No. x AWG)	Nominal Diameter mm [inch]	Finished Wire Maximum Resistance at 20°C (68°F) Ω/km [Ω /1000 ft]	Diameter Minimum mm [inch]	Diameter Nominal mm [inch]	Diameter Maximum mm [inch]	Nominal Weight in kg/km [lb/1000 ft]
FLDWC0311-26-*	26	19 x 38	.470 [.0185]	132 [40.1]	.965 [.038]	1.02 [.040]	1.07 [.042]	2.38 [1.6]
FLDWC0311-24-*	24	19 x 36	.597 [.0235]	83.3 [25.4]	1.12 [.044]	1.17 [.046]	1.22 [.048]	3.57 [2.4]
FLDWC0311-22-*	22	19 x 34	.749 [.0295]	52.2 [15.9]	1.32 [.052]	1.37 [.054]	1.42 [.056]	5.21 [3.5]
FLDWC0311-20-*	20	19 x 32	.953 [.0375]	32.0 [9.76]	1.52 [.060]	1.57 [.062]	1.63 [.064]	7.59 [5.1]
FLDWC0311-18-*	18	19 x 30	1.18 [.0465]	20.4 [6.22]	1.78 [.070]	1.85 [.073]	1.93 [.076]	11.46 [7.7]
FLDWC0311-16-*	16	19 x 29	1.33 [.0525]	15.8 [4.82]	1.98 [.078]	2.06 [.081]	2.13 [.084]	14.58 [9.8]
FLDWC0311-14-*	14	19 x 27	1.68 [.0660]	10.0 [3.05]	2.39 [.094]	2.49 [.098]	2.59 [.102]	21.88 [14.7]

* Replace asterisk with color code designator:
0 = Black 3 = Orange 7 = Violet
1 = Brown 4 = Yellow 8 = Gray
2 = Red 5 = Green 9 = White
For example:FLDWC0311-20-9 = AWG 20, white.

Construction Details

Nominal CSA Part No.	Wire Size (mm^2)	Conductor Stranding (No. x Dia.)	Diameter (min.) mm [inch]	Diameter (max.) mm [inch]	Finished Wire Maximum Resistance at 20°C (68°F) Ω/km [Ω /1000 ft]	Diameter Lower Spec. Limit mm [inch]	Diameter Target Value mm [inch]	Diameter Upper Spec. Limit mm [inch]	Nominal Weight in kg/km [lb/1000 ft]
FLDWC0311-0.25*	0.25	19 x 0.127	0.55 [.022]	0.63 [.025]	83.3 [25.5]	1.12 [.044]	1.17 [.046]	1.22 [.048]	3.45 [2.32]
FLDWC0311-0.35*	0.35	19 x 0.15	0.72 [.028]	0.77 [.030]	56.1 [17.1]	1.31 [.052]	1.37 [.054]	1.42 [.056]	4.79 [3.21]
FLDWC0311-0.50*	0.50	19 x 0.19	0.86 [.034]	0.88 [.035]	40.1 [12.2]	1.46 [.057]	1.51 [.059]	1.56 [.061]	6.46 [4.34]
FLDWC0311-0.75*	0.75	19 x 0.23	1.05 [.041]	1.08 [.043]	24.7 [7.53]	1.65 [.065]	1.70 [.067]	1.75 [.069]	8.93 [5.99]
FLDWC0311-1.00*	1.00	19 x 0.25	1.17 [.046]	1.26 [.050]	20.0 [6.1]	1.78 [.070]	1.85 [.073]	1.93 [.076]	10.90 [7.31]
FLDWC0311-1.50*	1.50	19 x 0.32	1.35 [.053]	1.58 [.062]	13.7 [4.2]	2.19 [.086]	2.27 [.089]	2.34 [.092]	17.90 [12.01]
FLDWC0311-2.00*	2.00	19 x 0.36	1.66 [0.65]	1.79 [0.07]	9.7	2.42 [.095]	2.52 [.099]	2.62 [.103]	21.30 [14.29]
FLDWC0311-2.50*	2.50	19 x 0.41	1.85 [0.07]	2.01 [0.08]	8.2	2.63 [.104]	2.73 [.104]	2.83 [.111]	27.40 [18.39]

* Replace asterisk with color code designator:
0 = Black 3 = Orange 6 = Blue 9 = White
1 = Brown 4 = Yellow 7 = Violet
2 = Red 5 = Green 8 = Gray
For example: FLDWC0311-20-9 = AWG 20, white.
FLDWC0311-1.00-9 = Size 1.00 mm^2, white.

For product requiring CUR (Canadian UL) or CSA marking in 16-10 AWG, stranded conductors only, the part numbering descriptions above **MIGHT NOT** apply. Please contact TE for further information.

Dimensions are shown for reference purposes only. Specifications subject to change.

Dimensions are in millimeters unless otherwise specified.

USA: +1 800 522 6752
Asia Pacific: +86 0 400 820 6015
UK: +44 800 267 666

For additional support numbers please visit www.te.com

FlexLite TW

Thin-Wall Hookup Wire and Cable

Product Facts

- UL rated operating temperature to 135°C [275°F]
- Thin-wall product for size and weight savings
- Tough insulation material
- Excellent chemical resistance
- Gauge sizes from 10-32 AWG
- No plasticizers or corrosive outgassing, which can be detrimental to sensitive electrical and electronic components

Applications

FlexLite TW (FLTW) wire is commonly used in applications that demand smaller, more rugged components, often in elevated temperatures. Designed to offer reduced size while maintaining superior mechanical performance, FLTW in many cases is a lower-cost solution than expensive fluoropolymer wire.

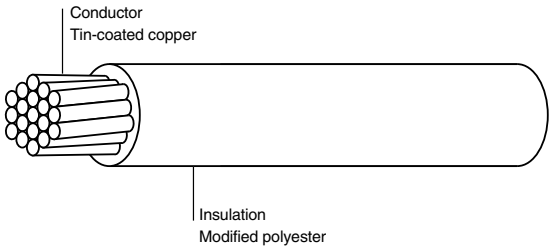

Specifications/Approvals

Series	UL	CUR	CSA	TE
TW	Style 10208 Temperature rating 135°C [275°F]	Recognized	Certified AWMIA	WCD-3106

Available in:	Americas	Europe	Asia Pacific
	■	■	■

Catalog 1654025
Revised 3-13

www.te.com

Dimensions are shown for reference purposes only. Specifications subject to change.

Dimensions are in millimeters unless otherwise specified.

USA: +1 800 522 6752
Asia Pacific: +86 0 400 820 6015
UK: +44 800 267 666

For additional support numbers please visit www.te.com

FlexLite TW (Continued)

Construction Details

Part No.	Wire Size (AWG)	Conductor Stranding (No. x AWG)	Nominal Diameter mm [inch]	Finished Wire Maximum Resistance at 20°C (68°F) Ω/km [Ω /1000 ft]	Diameter Minimum mm [inch]	Diameter Nominal mm [inch]	Diameter Maximum mm [inch]	Nominal Weight in kg/km [lb/1000 ft]
FLTWC0311-26-*	26	19 x 38	.483 [0.19]	150.0 [45.8]	.813 [.032]	.864 [.034]	.914 [.036]	1.93 [1.3]
FLTWC0311-24-*	24	19 x 36	.610 [0.24]	94.2 [28.7]	.965 [.038]	1.02 [.040]	1.07 [.042]	2.83 [1.9]
FLTWC0311-22-*	22	19 x 34	.762 [.030]	59.4 [18.1]	1.14 [.045]	1.19 [.047]	1.24 [.049]	4.17 [2.8]
FLTWC0311-20-*	20	19 x 32	.965 [.038]	37.4 [11.4]	1.35 [.053]	1.40 [.055]	1.45 [.057]	6.25 [4.2]
FLTWC0311-18-*	18	19 x 30	1.19 [.047]	23.5 [7.15]	1.60 [.063]	1.65 [.065]	1.70 [.067]	9.52 [6.4]
FLTWC0311-16-*	16	19 x 29	1.35 [.053]	15.8 [4.82]	1.75 [.069]	1.83 [.072]	1.91 [.075]	12.20 [8.2]
FLTWC0311-14-*	14	19 x 27	1.68 [.066]	10.0 [3.05]	2.16 [.085]	2.26 [.089]	2.36 [.093]	18.90 [12.7]
FLTWD0311-12-*	12	37 x 28	2.16 [.085]	6.59 [2.01]	2.64 [.104]	2.74 [.108]	2.84 [.112]	28.87 [19.4]
FLTWD0311-10-*	10	37 x 26	2.72 [.107]	4.13 [1.26]	3.23 [1.27]	3.33 [.131]	3.43 [1.35]	45.39 [30.5]

* Replace asterisk with color code designator:
0 = Black 3 = Orange 6 = Blue 9 = White
1 = Brown 4 = Yellow 7 = Violet
2 = Red 5 = Green 8 = Gray
For example: FLTWC0311-22-9 = AWG 22, white.

For product requiring CUR (Canadian UL) or CSA marking in 16-10 AWG, stranded conductors only, the part numbering descriptions above **DO NOT** apply. Please contact TE for further information.

Dimensions are shown for reference purposes only. Specifications subject to change.

Dimensions are in millimeters unless otherwise specified.

USA: +1 800 522 6752
Asia Pacific: +86 0 400 820 6015
UK: +44 800 267 666

For additional support numbers please visit www.te.com

FlexLite HT

High-Temperature Hookup Wire

Product Facts

- UL rated operating temperature to 200°C [392°F]
- Exceptional chemical resistance
- Thin-wall, for size and weight savings
- Tough fluoropolymer insulation material
- Excellent stripping and handling
- Variety of constructions and colors
- Crosslinked to minimize cold flow
- VW-1 flammability rating
- 600 V rating

Applications

FlexLite HT (FLHT) wire is the product of choice for high-temperature applications. It offers shop-handling advantages over silicone/ fiberglass constructions (SF1/SF2) and is cost-competitive with other fluoropolymer wire. Applications include halogen lights, wireless tools and small high-end appliances where space and temperature are issues.

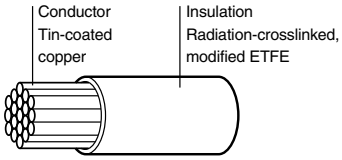

Specifications/Approvals

Series	UL	CUR	CSA	TE
HT	Style 3557 Flammability VW-1 Temperature rating 200°C [392°F]	Recognized	Certified AWMIA/B	WCD-3106

Available in:	Americas	Europe	Asia Pacific
	■	■	■

Catalog 1654025
Revised 3-13

www.te.com

Dimensions are shown for reference purposes only. Specifications subject to change.

Dimensions are in millimeters unless otherwise specified.

USA: +1 800 522 6752
Asia Pacific: +86 0 400 820 6015
UK: +44 800 267 666

For additional support numbers please visit www.te.com

FlexLite HT (Continued)

Construction Details

Part No.	Wire Size (AWG)	Conductor Stranding (No. x AWG)	Nominal Diameter mm [inch]	Finished Wire Maximum Resistance at 20°C (68°F) Ω/km [Ω /1000 ft]	Diameter Minimum mm [inch]	Diameter Nominal mm [inch]	Diameter Maximum mm [inch]	Nominal Weight in kg/km [lb/1000 ft]
FLHTC0311-26-*	26	19 x 38	.483 [.019]	150.0 [45.8]	.765 [.0301]	.800 [.0315]	.836 [.0329]	1.89 [1.27]
FLHTC0311-24-*	24	19 x 36	.610 [.024]	94.2 [28.7]	.892 [.0351]	.927 [.0365]	.963 [.0379]	2.75 [1.85]
FLHTC0311-22-*	22	19 x 34	.762 [.030]	59.4 [18.1]	1.04 [.0411]	1.08 [.0425]	1.12 [.0439]	4.08 [2.74]
FLHTC0311-20-*	20	19 x 32	.965 [.038]	37.4 [11.4]	1.25 [.0491]	1.28 [.0505]	1.32 [.0519]	6.21 [4.17]
FLHTC0311-18-*	18	19 x 30	1.19 [.047]	23.5 [7.15]	1.48 [.0583]	1.52 [.0600]	1.57 [.0617]	9.43 [6.34]
FLHTC0311-16-*	16	19 x 29	1.35 [.053]	15.8 [4.82]	1.67 [.0656]	1.71 [.0675]	1.76 [.0694]	12.0 [8.09]
FLHTC0311-14-*	14	19 x 27	1.68 [.066]	10.0 [3.05]	2.03 [.0799]	2.08 [.0820]	2.14 [.0841]	18.6 [12.5]
FLHTD0311-12-*	12	37 x 28	2.16 [.085]	6.59 [2.01]	2.50 [.0984]	2.57 [.1010]	2.63 [.1036]	28.7 [19.3]
FLHTD0311-10-*	10	37 x 26	2.72 [.107]	4.13 [1.26]	3.07 [.1210]	3.18 [.1250]	3.28 [.1290]	30.7 [45.7]

Construction Details

Part No.	Nominal CSA (mm^2)	Conductor Stranding No/Dia. (mm)	Diameter (min.) mm [inch]	Diameter (max.) mm [inch]	Finished Wire Maximum Resistance at 20°C (68°F) (ohms/km)	Diameter Lower Spec. Limit mm [inch]	Diameter Target Value mm [inch]	Diameter Upper Spec. Limit mm [inch]	Nominal Weight (kg/km)
FLHTC0311-0.25-*	0.25	19/0.127	0.55 [.022]	0.63 [.025]	83.3	0.96 [.038]	1.00 [.039]	1.03 [.041]	2.95
FLHTC0311-0.35-*	0.35	19/0.15	0.74 [.029]	0.76 [.030]	52.2	1.12 [.044]	1.16 [.046]	1.19 [.047]	4.22
FLHTC0311-0.50-*	0.50	19/0.19	0.86 [.034]	0.88 [.035]	40.1	1.24 [.049]	1.27 [.050]	1.31 [.052]	5.59
FLHTC0311-0.75-*	0.75	19/0.23	1.05 [.041]	1.08 [.043]	24.7	1.43 [.056]	1.47 [.058]	1.51 [.059]	7.95
FLHTC0311-1.00-*	1.00	19/0.25	1.17 [.046]	1.26 [.050]	20.0	1.58 [.062]	1.62 [.064]	1.66 [.065]	9.85
FLHTC0311-1.50-*	1.50	19/0.32	1.35 [.053]	1.58 [.062]	13.7	1.82 [.072]	1.87 [.074]	1.92 [.076]	15.69
FLHTC0311-2.00-*	2.00	19/0.36	1.66 [.065]	1.79 [.070]	9.7	2.05 [.081]	2.10 [.083]	2.16 [.085]	18.67
FLHTC0311-2.50-	2.50	19/0.41	1.85 [.073]	2.01 [.080]	8.2	2.24 [.088]	2.31 [.091]	2.38 [.094]	24.62

* Replace asterisk with color code designator:
0 = Black 3 = Orange 6 = Blue 9 = White
1 = Brown 4 = Yellow 7 = Violet
2 = Red 5 = Green 8 = Gray
For example: FLHTC0311-22-9 = AWG 22, white.
FLHTC0311-0.50-9 = Size 0.50mm^2, white.

For product requiring CUR (Canadian UL) or CSA marking in 16-10 AWG, stranded conductors only, the part numbering descriptions above **DO NOT** apply. Please contact TE for further information.

Dimensions are shown for reference purposes only. Specifications subject to change.

Dimensions are in millimeters unless otherwise specified.

USA: +1 800 522 6752
Asia Pacific: +86 0 400 820 6015
UK: +44 800 267 666

For additional support numbers please visit www.te.com

Thermocouple Extension Cable

Product Facts

- **19-strand conductor for flexibility**
- **All 4 types available in different combinations**
- **Custom designs with different insulation systems are available**
- **Lightweight, small size thermocouple extension cables**

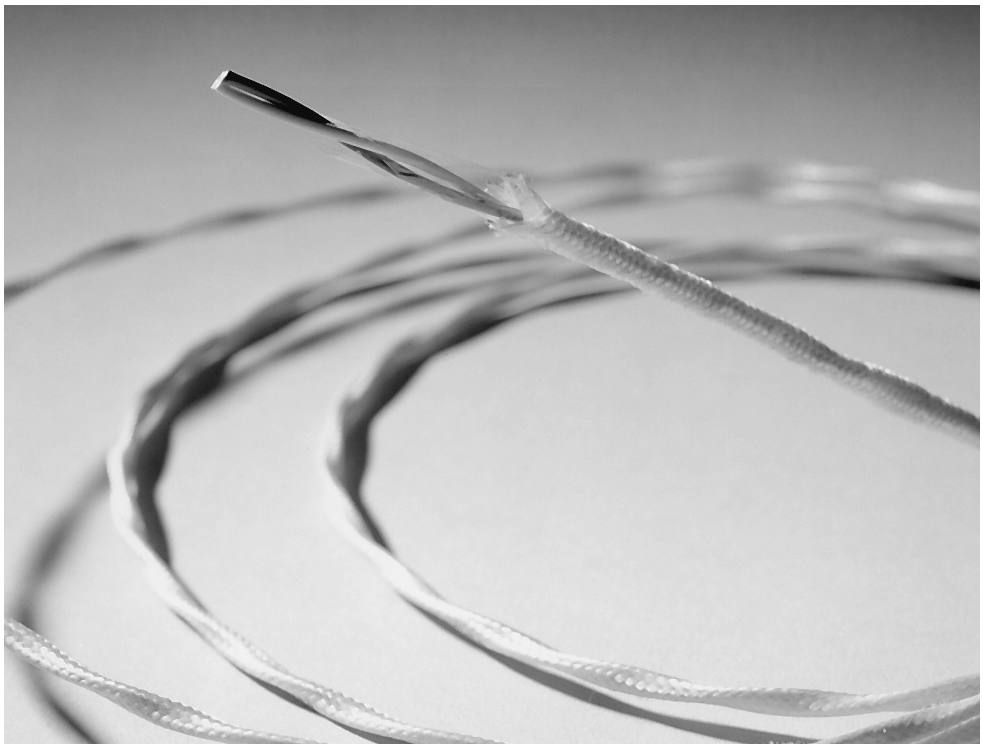

Applications

TE manufactures a broad range of Raychem brand Thermocouple extension cables in four thermoelement combinations. Each provides accurate transmission of electro-motive force (EMF) from a Thermocouple element lead wire of the same conductor material to a thermometer, also known as a pyrometer.

All four types of Thermocouple extension cables use 19-strand conductors and are available in twisted pair, jacketed twisted pair, and shielded and jacketed twisted pair configurations. A range of cables is available from 16 AWG to 24 AWG.

Wires and cables are insulated and jacketed with radiation-crosslinked ETFE, which has a continuous operating temperature of -65°C to +200°C [-85°F to +392°F]. This material, which is fully specified in TE SPEC 55, has excellent physical properties and is highly resistant to a wide range of chemicals.

Operating Temperature Range

-65°C to 200°C
[-85°F to 392°F]

Available in:	Americas	Europe	Asia Pacific
	■	■	■

Catalog 1654025
Revised 3-13

www.te.com

Dimensions are shown for reference purposes only. Specifications subject to change.

Dimensions are in millimeters unless otherwise specified.

USA: +1 800 522 6752
Asia Pacific: +86 0 400 820 6015
UK: +44 800 267 666

For additional support numbers please visit www.te.com

Thermocouple Extension Cable (Continued)

Properties

Extension Cable Type	Thermoelement Combination	Initial Calibration Tolerances for Thermocouple Extension Wires		
		Temperature Range	Limit of Range	EMF (mv)* (min.–max.)
EX	Chromel-Constantan	0°C to 200°C [0°F to 392°F]	±1.7°C [35.1°F]	6.18–6.45
JX	Iron-Constantan	0°C to 200°C [0°F to 392°F]	±2.2°C [36.0°F]	5.15–5.39
KX	Chromel-Alumel	0°C to 200°C [0°F to 392°F]	±2.2°C [36.0°F]	4.00–4.19
TX	Copper-Constantan	0°C to 100°C [0°F to 212°F]	±1.0°C [32.0°F]	4.24–4.32

Note: The above is in accordance with ANSI-MC-96.1-1982.
*EMF is measured in millivolts (mv) at 100°C [212°F] with reference junction at 0°C [0°F].

Product Dimensions** (Nominal)

AWG Size	Twisted Pair		Twisted, Jacketed Pair		Twisted, Shielded, 38 AWG Braid Strand, Jacketed Pair	
	Outside Diameter	Weight in kg/km (lb/1000 ft)	Outside Diameter	Weight in kg/km (lb/1000 ft)	Outside Diameter	Weight in kg/km (lb/1000 ft)
24	2.29 [.090]	7.3 [4.9]	2.67 [.106]	9.9 [6.7]	3.12 [.123]	16.5 [11.1]
22	2.60 [.102]	9.9 [6.7]	2.99 [.118]	13.0 [8.8]	3.43 [.135]	21.4 [14.4]
20	2.99 [.118]	14.4 [9.7]	3.40 [.134]	18.0 [12.1]	3.83 [.151]	27.8 [18.7]
18	3.56 [.140]	20.9 [14.1]	3.96 [.156]	25.1 [16.9]	4.34 [.173]	37.5 [25.2]
16	3.96 [.156]	26.3 [17.7]	4.37 [.172]	30.9 [20.8]	4.80 [.189]	44.9 [30.2]

**Dimensions for 19-strand-conductor thermocouple. Extension Types EX, JX, KX, and TX.

Extension Cable

Color-Coding

Thermocouple extension cables are available with the wires color-coded in accordance with five standards: MIL-STD-687, ANSI-MC-96.1, British Standard Code BS 1843, Japanese JIS-C-1602 and IEC 584-3 color coding system (see bel0w) (International Standard)

Special Cables

Thermocouple extension cables are also available in solid-conductor and seven-strand-conductor configurations. They come in a variety of thermoelement combinations, gauges, insulations, and multiple-pair designs, and they are available for outer space applications. Contact TE for details.

Extension Cable

Type EX	Chromel +	Constantan -	Jacket (if present)	Color code Wire	Jacket
ANSI-MC-96.1	Violet	Red	Violet	7/2	7
British Std.-BS 1843	Brown	Blue	Brown	1/6	1
JIS-C-1602	Violet	Red	Violet	7/2	7
IEC 584-3	Violet	White	Violet	7/9	7
Type JX	**Iron +**	**Constantan -**	**Jacket**	**Wire**	**Jacket**
MIL-STD-687	Black	Yellow	White	0/4	9
ANSI-MC-96.1	White	Red	Black	9/2	0
British Std.-BS 1843	Yellow	Blue	Black	4/6	0
JIS-C-1602	Red	White	Yellow	2/9	4
IEC 584-3	Black	White	Black	0/9	0
Type KX	**Chromel +**	**Alumel -**	**Jacket**	**Wire**	**Jacket**
MIL-STD-687	White	Green	White	9/5	9
ANSI-MC-96.1	Yellow	Red	Yellow	4/2	4
British Std.-BS 1843	Brown	Blue	Red	1/6	2
JIS-C-1602	Red	White	Blue	2/9	6
IEC 584-3	Green	White	Green	5/9	5
Type TX	**Copper +**	**Constantan -**	**Jacket**	**Wire**	**Jacket**
MIL-STD-687	Red	Yellow	White	2/4	9
ANSI-MC-96.1	Blue	Red	Blue	6/2	6
British Std.-BS 1843	White	Blue	Blue	9/6	6
JIS-C-1602	Red	White	Brown	2/9	1
IEC 584-3	Brown	White	Brown	1/9	1

Catalog 1654025
Revised 3-13

www.te.com

Dimensions are shown for reference purposes only. Specifications subject to change.

Dimensions are in millimeters unless otherwise specified.

USA: +1 800 522 6752
Asia Pacific: +86 0 400 820 6015
UK: +44 800 267 666

For additional support numbers please visit www.te.com

Thermocouple Extension Cable (Continued)

Part Number Selection Table

The Thermocouple cable options outlined in the table on the previous page can be ordered from the table below.

TE will assign a new part number on request for cables falling outside the range shown in the table.

Type	Twisted Pair	Twisted, Jacketed Pair	Shield Plating*	Twisted, Shielded, Jacketed Pair
EX	CTC-0077	CTC-0079	T	CTC-0074
			N	55A6169
JX	55A8131	CTC-0080	T	CTC-0044
KX	55A8002	CTC-0012	T	CTC-0018
			N	CTC-0015
			S	CTC-0057
TX	CTC-0078	CTC-0081	T	CTC-0073

*T = Tin-coated copper.
N = Nickel-coated copper.
S = Silver-coated copper.

Catalog 1654025
Revised 3-13

www.te.com

Dimensions are shown for reference purposes only. Specifications subject to change.

Dimensions are in millimeters unless otherwise specified.

USA: +1 800 522 6752
Asia Pacific: +86 0 400 820 6015
UK: +44 800 267 666

For additional support numbers please visit www.te.com

ElectroLoss Filterline

Lightweight, Ruggedized Filterline Wire and Cable

Product Facts

- Suppresses EMI above 100 MHz
- Light weight, small size
- SPEC 55 insulation
- 600 volt
- -65°C up to 200°C [-85°F to 392°F]

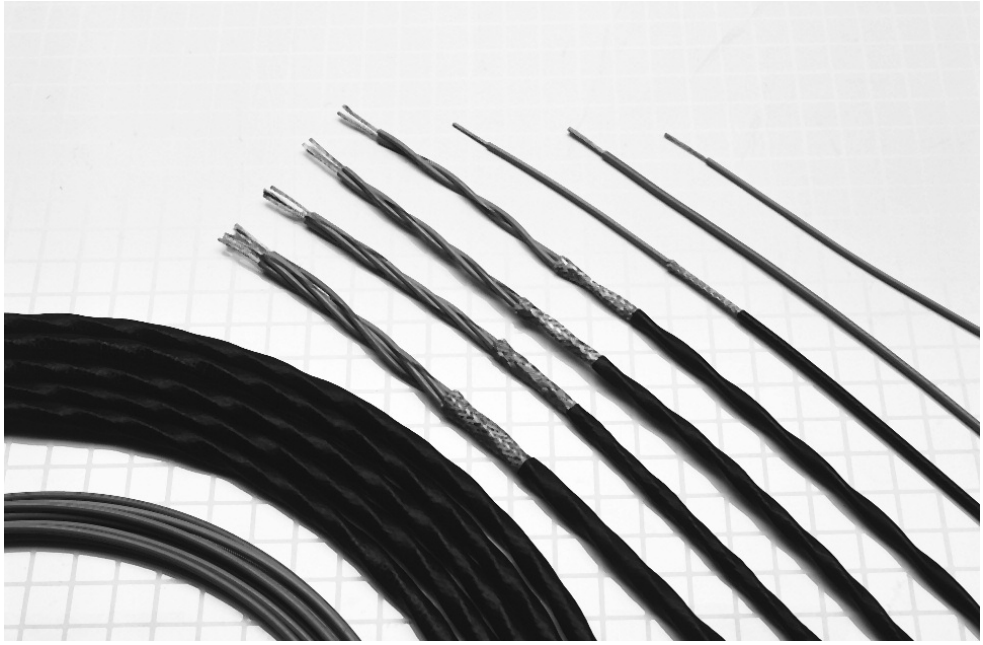

Available in:	
Americas	■
Europe	■
Asia Pacific	■

Applications

Today's performance needs for military and commercial electronic systems require increasingly sophisticated equipment and greater use of composite structures and enclosures. As electronics become more sensitive, the EMI protection level for electrical equipment is increasing. The Raychem brand of ElectroLoss FilterLine wire and cable provide a high degree of EMI protection while functioning as conventional electrical wiring.

ElectroLoss FilterLine products include high-performance wire and cable, which when used as specified, suppress conducted and radiated EMI above 100 MHz.

A reliable alternative to conventional discrete filters and filter-pin connectors, ElectroLoss FilterLine cables are flexible, lightweight, and compatible with high-density connectors.

The ElectroLoss FilterLine wire and cable meets the performance requirements of SAE AS85485 originally a military specification developed to provide EMI protection for military electrical interconnects.

The absorptive layer in ElectroLoss FilterLine cable is constructed of a ferrite-loaded high-temperature polymer, which provides high-frequency EMI absorptive characteristics. Achieving maximum attenuation requires concentrating the electromagnetic fields in the absorptive layer — either with a metallic shield on each wire or by an overall metallic shield protecting a bundle of individual component wires.

Radiation-crosslinked, modified conductive EFTE jackets are used over shielded filter line cables to eliminate pathways between adjacent cable shields.

Application-driven alternative ElectroLoss FilterLine constructions built to the same rigorous standards demanded of the military requirements are also available. These alternatives offer significant weight savings through the use of flat braids, improved laser mark contrast, and a broader choice of conductors.

55FA0511

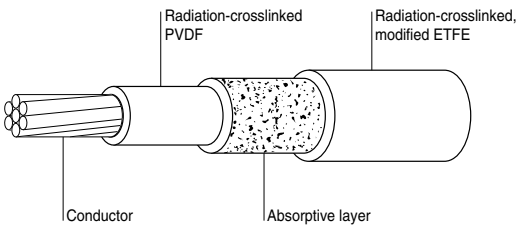

55FB1511

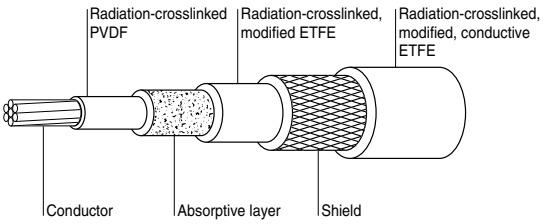

Catalog 1654025
Revised 3-13

www.te.com

Dimensions are shown for reference purposes only. Specifications subject to change.

Dimensions are in millimeters unless otherwise specified.

USA: +1 800 522 6752
Asia Pacific: +86 0 400 820 6015
UK: +44 800 267 666

For additional support numbers please visit www.te.com

ElectroLoss Filterline (Continued)

Performance

Effective against conducted EMI ElectroLoss FilterLine wire and cable systems attenuate high-frequency EMI and allow low frequency signals to pass with minimum loss. When properly installed and used, filter line wire and cables function as low-pass electrical filters, attenuating both conducted and radiated EMI above 100MHz. The performance of ElectroLoss FilterLine product is best demonstrated by measuring the attenuation (insertion loss) of a length of cable over a broad range of frequencies. Graph 1 depicts typical insertion loss characteristics.

Graph 1 - Typical insertion loss

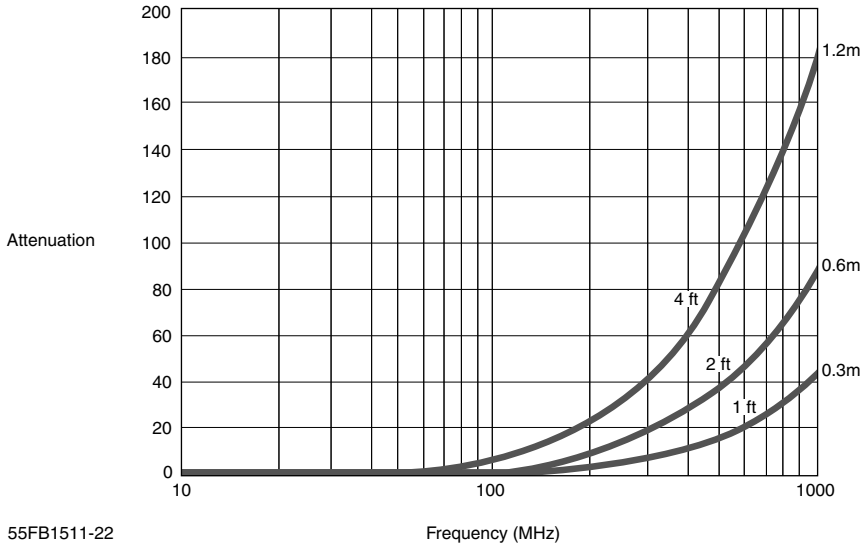

Temperature rating	-65°C up to 200°C [-85°F to 392°F]
Voltage rating	600V r.m.s

Catalog 1654025
Revised 3-13

www.te.com

Dimensions are shown for reference purposes only. Specifications subject to change.

Dimensions are in millimeters unless otherwise specified.

USA: +1 800 522 6752
Asia Pacific: +86 0 400 820 6015
UK: +44 800 267 666

For additional support numbers please visit www.te.com

Lightweight, Ruggedized Filterline Wire and Cable

Single Conductor Wire Specifications 150˚C Rated Wire

AWG Size	Conductor Stranding (Number x AWG)	Maximum Outside Diameter mm (in)	Maximum Weight Kg/Km (lb/1000 ft)	MIL-SPEC Part Number	TE Part Number
24	19 x 36 silver coated high strength copper alloy	1.19 [.047]	4.46 [3.0]	M85485/10-24A	55FA0514-24-*
22	19 x 34 tin coated copper	1.37 [.054]	5.95 [4.0]	M85485/9-22A	55FA0511-22-*
20	19 x 32 tin coated copper	1.57 [.062]	8.63 [5.8]	M85485/9-20A	55FA0511-20-*
18	19 x 30 tin coated copper	1.85 [.073]	12.95 [8.7]	M85485/9-18A	55FA0511-18-*
16	19 x 29 tin coated copper	2.08 [.082]	16.67 [11.2]	M85485/9-16A	55FA0511-16-*
14	19 x 27 tin coated copper	2.51 [.099]	23.96 [16.1]	M85485/9-14A	55FA0511-14-*
12	37 x 28 tin coated copper	2.95 [.116]	35.71 [24.0]	M85485/9-12A	55FA0511-12-*
10	37 x 26 tin coated copper	3.58 [.141]	55.06 [37.0]	M85485/9-10A	55FA0511-10-*

* The color of component wire shall be light violet designated by 7L.
The designated colors for components in finished cable shall be light violet for component 1 and light violet with stripe designators for remaining component wires as follows:

Component wire	1	2	3	4	5
Color designator	7L	7L6	7L3	7L5	7L2

Low Fluoride Specifications 200˚C Rated Wire

AWG Size	Conductor Stranding (Number x AWG)	Maximum Outside Diameter mm (in)	Maximum Weight Kg/Km (lb/1000 ft)	TE Part Number
24	19 x 36 silver coated high strength copper alloy	1.19 [.047]	4.46 [3.0]	55FAF7128-24-*
22	19 x 34 silver coated copper	1.37 [.054]	5.95 [4.0]	55FAF0512-22-*
20	19 x 32 silver coated copper	1.57 [.062]	8.63 [5.8]	55FAF0512-20-*
18	19 x 30 silver coated copper	1.85 [.073]	12.95 [8.7]	55FAF0512-18-*
16	19 x 29 silver coated copper	2.08 [.082]	16.67 [11.2]	55FAF0512-16-*
14	19 x 27 silver coated copper	2.51 [.099]	23.96 [16.1]	55FAF0512-14-*
12	37 x 28 silver coated copper	2.95 [.116]	35.71 [24.0]	55FAF0512-12-*
10	37 x 26 silver coated copper	3.58 [.141]	55.06 [37.0]	55FAF0512-10-*

The color of the component wire shall be light yellow designated by 4L. The designated colors for components shall be light yellow for component 1 and light yellow with stripe designators for remaining component wires as follows:

Component Wire	1	2	3	4	5
Color Designation	4L	4L6	4L3	4L5	4L2

Dimensions are shown for reference purposes only. Specifications subject to change.

Dimensions are in millimeters unless otherwise specified.

USA: +1 800 522 6752
Asia Pacific: +86 0 400 820 6015
UK: +44 800 267 666

For additional support numbers please visit www.te.com

Lightweight, Ruggedized Filterline Wire and Cable
(Continued)

Unshielded, Unjacketed 2-5 Conductor Cable Specifications 150˚C Rated Wire

AWG Size	Number of Conductor	Maximum Outside Diameter mm [in.]	Maximum Weight Kg/Km (lb/1000 ft)	MIL-SPEC Part Number	TE Part Number
24	2	2.39 [.094]	9.08 [6.1]	M85485/11-24M2A	55FA0524-24-*
22	2	2.74 [.108]	12.20 [8.2]	M85485/11-22T2A	55FA0521-22-*
20	2	3.15 [.124]	17.56 [11.8]	M85485/11-20T2A	55FA0521-20-*
18	2	3.71 [.146]	26.34 [17.7]	M85485/11-18T2A	55FA0521-18-*
16	2	4.17 [.164]	33.93 [22.8]	M85485/11-16T2A	55FA0521-16-*
14	2	5.03 [.198]	48.81 [32.8]	M85485/11-14T2A	55FA0521-14-*
24	3	2.59 [.102]	13.69 [9.2]	M85485/11-24M3A	55FA0534-24-*
22	3	2.97 [.117]	18.15 [12.2]	M85485/11-22T3A	55FA0531-22-*
20	3	3.40 [.134]	26.34 [17.7]	M85485/11-20T3A	55FA0531-20-*
18	3	4.01 [.158]	39.58 [26.6]	M85485/11-18T3A	55FA0531-18-*
16	3	4.50 [.177]	51.03 [34.3]	M85485/11-16T3A	55FA0531-16-*
14	3	5.44 [.214]	73.36 [49.3]	M85485/11-14T3A	55FA0531-14-*
24	4	3.28 [.129]	18.15 [12.2]	M85485/11-24M4A	55FA0544-24-*
22	4	3.78 [.149]	24.25 [16.3]	M85485/11-22T4A	55FA0541-22-*
20	4	4.34[.171]	35.27 [23.7]	M85485/11-20T4A	55FA0541-20-*
18	4	5.11 [.201]	52.82 [35.5]	M85485/11-18T4A	55FA0541-18-*
16	4	5.74 [.226]	68.00 [45.7]	M85485/11-16T4A	55FA0541-16-*
14	4	6.91 [.272]	97.76 [65.7]	M85485/11-14T4A	55FA0541-14-*
24	5	3.58 [.141]	22.77 [15.3]	M85485/11-24M5A	55FA0554-24-*
22	5	4.11 [.162]	30.36 [20.4]	M85485/11-22T5A	55FA0551-22-*
20	5	4.72 [.186]	44.04 [29.6]	M85485/11-20T5A	55FA0551-20-*
18	5	5.56 [.219]	66.07 [44.4]	M85485/11-18T5A	55FA0551-18-*
16	5	6.25 [.246]	84.96 [57.1]	M85485/11-16T5A	55FA0551-16-*
14	5	7.54 [.297]	122.16 [82.1]	M85485/11-14T5A	55FA0551-14-*

* The color of component wire shall be light violet designated by 7L.
The designated colors for components in finished cable shall be light violet for component 1 and light violet with stripe designators for remaining component wires as follows:

Component wire	1	2	3	4	5
Color designator	7L	7L6	7L3	7L5	7L2

Dimensions are shown for reference purposes only. Specifications subject to change.

Dimensions are in millimeters unless otherwise specified.

USA: +1 800 522 6752
Asia Pacific: +86 0 400 820 6015
UK: +44 800 267 666

For additional support numbers please visit www.te.com

ElectroLoss Filterline (Continued)

Low Fluoride Specifications
200˚C Rated Wire

AWG Size	Number of Conductor	Maximum Outside Diameter mm [in.]	Maximum Weight Kg/Km (lb/1000 ft)	TE Part Number
24	2	2.39 [.094]	9.08 [6.1]	55FAF7134-24-*
22	2	2.74 [.108]	12.20 [8.2]	55FAF0522-22-*
20	2	3.15 [.124]	17.56 [11.8]	55FAF0522-20-*
18	2	3.71 [.146]	26.34 [17.7]	55FAF0522-18-*
16	2	4.17 [.164]	33.93 [22.8]	55FAF0522-16-*
14	2	5.03 [.198]	48.81 [32.8]	55FAF0522-14-*
24	3	2.59 [.102]	13.69 [9.2]	55FAF7135-24-*
22	3	2.97 [.117]	18.15 [12.2]	55FAF0532-22-*
20	3	3.40 [.134]	26.34 [17.7]	55FAF0532-20-*
18	3	4.01 [.158]	39.58 [26.6]	55FAF0532-18-*
16	3	4.50 [.177]	51.03 [34.3]	55FAF0532-16-*
14	3	5.44 [.214]	73.36 [49.3]	55FAF0532-14-*
24	4	3.28 [.129]	18.15 [12.2]	55FAF7136-24-*
22	4	3.78 [.149]	24.25 [16.3]	55FAF0542-22-*
20	4	4.34[.171]	35.27 [23.7]	55FAF0542-20-*
18	4	5.11 [.201]	52.82 [35.5]	55FAF0542-18-*
16	4	5.74 [.226]	68.00 [45.7]	55FAF0542-16-*
14	4	6.91 [.272]	97.76 [65.7]	55FAF0542-14-*
24	5	3.58 [.141]	22.77 [15.3]	55FAF7137-24-*
22	5	4.11 [.162]	30.36 [20.4]	55FAF0552-22-*
20	5	4.72 [.186]	44.04 [29.6]	55FAF0552-20-*
18	5	5.56 [.219]	66.07 [44.4]	55FAF0552-18-*
16	5	6.25 [.246]	84.96 [57.1]	55FAF0552-16-*
14	5	7.54 [.297]	122.16 [82.1]	55FAF0552-14-*

The color of the component wire shall be light yellow designated by 4L. The designated colors for components shall be light yellow for component 1 and light yellow with stripe designators for remaining component wires as follows:

Component Wire	1	2	3	4	5
Color Designation	4L	4L6	4L3	4L5	4L2

Dimensions are shown for reference purposes only. Specifications subject to change.

Dimensions are in millimeters unless otherwise specified.

USA: +1 800 522 6752
Asia Pacific: +86 0 400 820 6015
UK: +44 800 267 666

For additional support numbers please visit www.te.com

ElectroLoss Filterline (Continued)

Lightweight, Ruggedized Filterline Wire and Cable (Continued)

Shielded, Jacketed 1-5 Conductor Cable Specifications

ElectroLoss Filterline Wire and Cable Light Weight Ruggedized Constructions — 150˚C

AWG Size	Number of Conductors	Shield Size AWG Tin Coated Copper	Maximum Outside Diameter mm (in)	Maximum Weight Kg/Km (lb/1000 ft)	MIL-SPEC Part Number	TE Part Number
24	1	38	2.13 [.084]	10.86 [7.3]	M85485/12-24U1A	55FB1514-24-*
22	1	38	2.31 [.091]	13.09 [8.8]	M85485/12-22T1A	55FB1511-22-*
20	1	38	2.51 [.099]	16.67 [11.2]	M85485/12-20T1A	55FB1511-20-*
18	1	38	2.79 [.110]	22.17 [14.9]	M85485/12-18T1A	55FB1511-18-*
16	1	38	3.02 [.119]	26.78 [18.0]	M85485/12-16T1A	55FB1511-16-*
14	1	38	3.45 [.136]	35.86 [24.1]	M85485/12-14T1A	55FB1511-14-*
12	1	38	3.89 [.153]	49.40 [33.2]	M85485/12-12T1A	55FB1511-12-*
10	1	38	4.55 [.179]	71.57 [48.1]	M85485/12-10T1A	55FB1511-10-*
24	2	38	3.33 [.131]	19.34 [13.0]	M85485/12-24U2A	55FB1524-24-*
22	2	38	3.68 [.145]	23.81 [16.0]	M85485/12-22T2A	55FB1521-22-*
20	2	38	4.09 [.161]	30.50 [20.5]	M85485/12-20T2A	55FB1521-20-*
18	2	38	4.65 [.183]	41.37 [27.8]	M85485/12-18T2A	55FB1521-18-*
16	2	38	5.11 [.201]	50.59 [34.0]	M85485/12-16T2A	55FB1521-16-*
14	2	38	6.02 [.237]	69.49 [46.7]	M85485/12-14T2A	55FB1521-14-*
24	3	38	3.53 [.139]	25.30 [17.0]	M85485/12-24U3A	55FB1534-24-*
22	3	38	3.91 [.154]	31.10 [20.9]	M85485/12-22T3A	55FB1531-22-*
20	3	38	4.34 [.171]	41.07 [27.6]	M85485/12-20T3A	55FB1531-20-*
18	3	38	4.95 [.195]	56.54 [38.0]	M85485/12-18T3A	55FB1531-18-*
16	3	38	5.44 [.214]	69.94 [47.0]	M85485/12-16T3A	55FB1531-16-*
14	3	38	6.43 [.253]	96.87 [65.1]	M85485/12-14T3A	55FB1531-14-*
24	4	38	4.19 [.165]	31.69 [21.3]	M85485/12-24U4A	55FB1544-24-*
22	4	38	4.67 [.184]	39.58 [26.6]	M85485/12-22T4A	55FB1541-22-*
20	4	38	5.23 [.206]	52.68 [35.4]	M85485/12-20T4A	55FB1541-20-*
18	4	38	5.99 [.236]	72.91 [49.0]	M85485/12-18T4A	55FB1541-18-*
16	4	38	6.68 [.263]	91.36 [61.4]	M85485/12-16T4A	55FB1541-16-*
14	4	38	7.85 [.309]	125.59 [84.4]	M85485/12-14T4A	55FB1541-14-*
24	5	38	4.52 [.178]	37.80 [25.4]	M85485/12-24U5A	55FB1554-24-*
22	5	38	5.05 [.199]	47.32 [31.8]	M85485/12-22T5A	55FB1551-22-*
20	5	38	5.66 [.223]	63.39 [42.6]	M85485/12-20T5A	55FB1551-20-*
18	5	38	6.55 [.258]	89.43 [60.1]	M85485/12-18T5A	55FB1551-18-*
16	5	38	7.24 [.285]	111.00 [74.6]	M85485/12-16T5A	55FB1551-16-*
14	5	38	8.53 [.336]	153.26 [103.0]	M85485/12-14T5A	55FB1551-14-*

* The color of component wire shall be light violet designated by 7L.
The designated colors for components in finished cable shall be light violet for component 1 and light violet with stripe designators for remaining component wires as follows:

Component wire	1	2	3	4	5
Color designator	7L	7L6	7L3	7L5	7L2

Fluid Resistance

Fluids	Hydrocarbons
	Fuels and lubricants
	Alcohols
	Cleaning fluids
	Glycols
	Synthetic fuels and lubricants
	Ketones

Dimensions are shown for reference purposes only. Specifications subject to change.

Dimensions are in millimeters unless otherwise specified.

USA: +1 800 522 6752
Asia Pacific: +86 0 400 820 6015
UK: +44 800 267 666

For additional support numbers please visit www.te.com

Lightweight, Ruggedized Filterline Wire and Cable
(Continued)

Electroloss Filterline Wire and Cable Light Weight Ruggedized Constructions — 200˚C (Flat Braid)

AWG Size	Number of Conductors	Shield Size AWG Tin Coated Copper	Maximum Outside Diameter mm (in)	Maximum Weight Kg/Km (lb/1000 ft)	TE Part Number
24	1	38	2.13 [.084]	10.86 [7.3]	55FBF7129-*
22	1	38	2.31 [.091]	13.09 [8.8]	55FBF2512-22-*
20	1	38	2.51 [.099]	16.67 [11.2]	55FBF2512-20-*
18	1	38	2.79 [.110]	22.17 [14.9]	55FBF2512-18-*
16	1	38	3.02 [.119]	26.78 [18.0]	55FBF2512-16-*
14	1	38	3.45 [.136]	35.86 [24.1]	55FBF2512-14-*
12	1	38	3.89 [.153]	49.40 [33.2]	55FBF2512-12-*
10	1	38	4.55 [.179]	71.57 [48.1]	55FBF2512-10-*
24	2	38	3.33 [.131]	19.34 [13.0]	55FBF7130-*
22	2	38	3.68 [.145]	23.81 [16.0]	55FBF2522-22-*
20	2	38	4.09 [.161]	30.50 [20.5]	55FBF2522-20-*
18	2	38	4.65 [.183]	41.37 [27.8]	55FBF2522-18-*
16	2	38	5.11 [.201]	50.59 [34.0]	55FBF2522-16-*
14	2	38	6.02 [.237]	69.49 [46.7]	55FBF2522-14-*
24	3	38	3.53 [.139]	25.30 [17.0]	55FBF7131-*
22	3	38	3.91 [.154]	31.10 [20.9]	55FBF2532-22-*
20	3	38	4.34 [.171]	41.07 [27.6]	55FBF2532-20-*
18	3	38	4.95 [.195]	56.54 [38.0]	55FBF2532-18-*
16	3	38	5.44 [.214]	69.94 [47.0]	55FBF2532-16-*
14	3	38	6.43 [.253]	96.87 [65.1]	55FBF2532-14-*
24	4	38	4.19 [.165]	31.69 [21.3]	55FBF7132-*
22	4	38	4.67 [.184]	39.58 [26.6]	55FBF2542-22-*
20	4	38	5.23 [.206]	52.68 [35.4]	55FBF2542-20-*
18	4	38	5.99 [.236]	72.91 [49.0]	55FBF2542-18-*
16	4	38	6.68 [.263]	91.36 [61.4]	55FBF2542-16-*
14	4	38	7.85 [.309]	125.59 [84.4]	55FBF2542-14-*
24	5	38	4.52 [.178]	37.80 [25.4]	55FBF7133-*
22	5	38	5.05 [.199]	47.32 [31.8]	55FBF2552-22-*
20	5	38	5.66 [.223]	63.39 [42.6]	55FBF2552-20-*
18	5	38	6.55 [.258]	89.43 [60.1]	55FBF2552-18-*
16	5	38	7.24 [.285]	111.00 [74.6]	55FBF2552-16-*
14	5	38	8.53 [.336]	153.26 [103.0]	55FBF2552-14-*

The color of the component wire shall be light yellow designated by 4L.
The designated colors for components shall be light yellow for component 1 and light yellow with stripe designators for remaining component wires as follows:

Component Wire	1	2	3	4	5
Color Designation	4L	4L6	4L3	4L5	4L2

Fluid Resistance

Fluids	Hydrocarbons
	Fuels and lubricants
	Alcohols
	Cleaning fluids
	Glycols
	Synthetic fuels and lubricants
	Ketones

Dimensions are shown for reference purposes only. Specifications subject to change.

Dimensions are in millimeters unless otherwise specified.

USA: +1 800 522 6752
Asia Pacific: +86 0 400 820 6015
UK: +44 800 267 666

For additional support numbers please visit www.te.com

Part Numbering System

55F B 1 5 2 1- AWG- 7L/7L- 0

Jacket Color (code per MIL-STD-681)
(codes same as for Primary Wire Insulation Color)

Primary Wire Insulation Color
(code per MIL-STD-681, except as noted)

0	-	Black	5	-	Green	9	-	White
1	-	Brown	6	-	Blue			
2	-	Red	7	-	Violet			
3	-	Orange	7L	-	Light Violet			
4	-	Yellow	8	-	Gray			

Conductor Size (AWG)

Conductor Type
1 - Tin-coated copper
2 - Silver-coated copper
3 - Nickel-coated copper
4 - Silver-coated high strength copper alloy
6 - Nickel-coated high strength copper alloy

Number of Conductors
1 through 10 (designator for 10 conductor = 0)

Class of Wire
1-3 Discontinued
4 Ruggedized
5 Lightweight ruggedized
6 To be re-assigned

Construction
0 - Component wire; or unshielded & unjacketed cable
1 - Round braid shielded and jacketed cable*
2 - Flat braid shielded & uacketed cable
7 - Special constructions

Product Type:
A - XL-EFTE (insulation, & cable jacket, if any)
B - Conductive XL-EFTE (cable jacket, black only)
A/ - Outer space 55FA
B/ - Outer space 55FB
AF - Low fluoride 55FA
BF - Low fluoride 55FB
A/F - Outer space, low fluoride 55FA
B/F - Outer space, low fluoride 55FB

Basic Product Number

Dimensions are shown for reference purposes only. Specifications subject to change.

Dimensions are in millimeters unless otherwise specified.

USA: +1 800 522 6752
Asia Pacific: +86 0 400 820 6015
UK: +44 800 267 666

For additional support numbers please visit www.te.com

Cheminax Coaxial Cables

Small, Lightweight Coaxial Cables

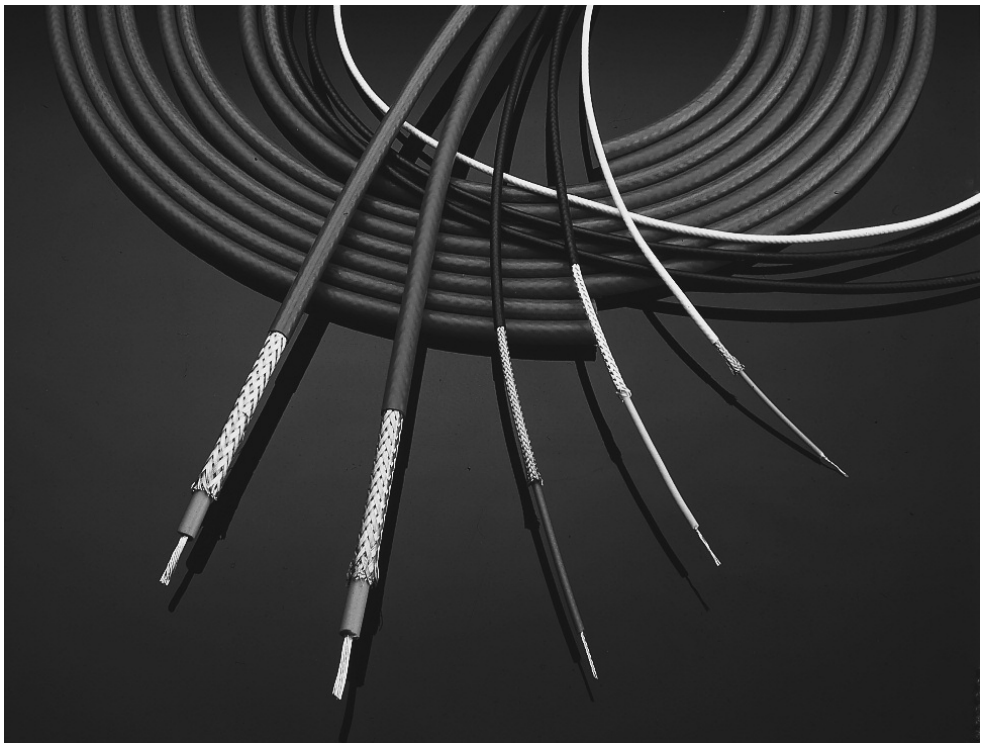

Product Facts

- Light weight, small size
- Temperature range of -65°C to 200°C [-85°F to 392°F]
- Low capacitance and attenuation
- High velocity of propagation
- High flexibility

Applications

Cheminax controlled electrical cables are used in the aircraft and aerospace industries. They have a wide range of applications in missiles, avionics, radio-frequency and microwave systems, computers, security and surveillance systems, and communications.

Cheminax coaxial cables were designed to solve interconnect problems in electronic systems, such as computers, military equipment, and other areas of high-density packing, where cables are required to perform to more exacting specifications than standard radio-grade (RG) constructions.

TE's advanced materials technology has allowed the design and development of Cheminax miniature coaxial cables that offer substantial savings in size and weight while improving mechanical performance and reducing attenuation.

Cables can be designed that are either smaller and lighter than standard RG cables or provide significantly lower attenuation and capacitance with no significant increase in size.

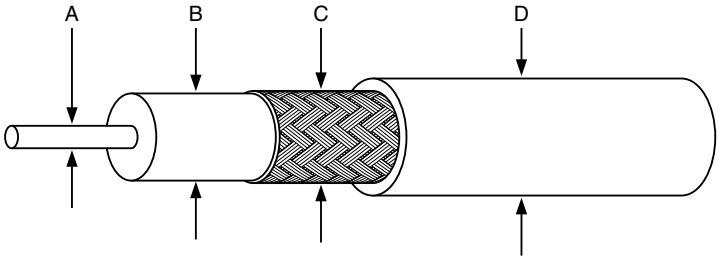

A Conductor
B Dielectric
C Shield
D Jacket

Available in:	Americas	Europe	Asia Pacific
	■	■	■

Catalog 1654025
Revised 3-13

www.te.com

Dimensions are shown for reference purposes only. Specifications subject to change.

Dimensions are in millimeters unless otherwise specified.

USA: +1 800 522 6752
Asia Pacific: +86 0 400 820 6015
UK: +44 800 267 666

For additional support numbers please visit www.te.com

Cheminax Coaxial Cables (Continued)

Part Numbering System

95	27	A	1	3	1	7	-	0
XX	XX	X	X	X	X	X	-	X

Example: 9527A1317-0

Jacket Color Identification Code

0 - Black	4 - Yellow	8 - Gray
1 - Brown	5 - Green	9 - White
2 - Red	6 - Blue	9X - Translucent White
3 - Orange	7 - Violet	X - Clear

Conductor Type

1 - Tin-coated copper
2 - Silver-coated copper
3 - Nickel-coated copper
4 - Silver-coated high strength copper alloy
5 - Aluminum
6 - Nickel-coated high strength copper alloy
7 - Tin-coated copper-clad steel
8 - Silver-coated copper-clad steel
9 - Bare copper
0 - Other
A - Silver-coated CS95

Dielectric Material

1 - Rayfoam L (Polyethylene)	6 - Modified XL-ETFE (SPEC 55)
2 - Rayfoam H (Foamed FEP)	7 - Flex XL-ETFE
3 - Rayolin F (Solid)	8 - Rayfoam M (Foamed MFA)
4 - Modified FEP (Solid)	0 - Other

Outer Jacket Material

1 - General purpose PVF²	6 - Modified XL-ETFE (SPEC 55)
2 - Outerspace PVF²	7 - Flex XL-ETFE (SPEC 80)
3 - Thermorad F & S	8 - Zerohal & Thermorad Low Smoke
4 - Modified FEP	9 - None
5 - ETFE (Uncrosslinked)	0 - Other

Construction

1 - Round braid	6 - Triax - other
2 - Flat braid	7 - Other
3 - 2 round braids	8 - Composite shield
4 - 2 shields (other)	9 - Core only
5 - Triax-round braids	0 - Other

Variation

A - Standard	U - Low Loss
B - Sequential within any PNs	W - Waterblocked
S - Outer Space Requirements	

Conductor Size (AWG)

Always 2 digits - 0X if under 10 AWG

Impedance

Always 2 digits - last 2 digits if over 100 ohms
0X (1 digit) if under 10 ohms

Part Numbering System is a cross reference only and not meant for part creation.

Dimensions are shown for reference purposes only. Specifications subject to change.

Dimensions are in millimeters unless otherwise specified.

USA: +1 800 522 6752
Asia Pacific: +86 0 400 820 6015
UK: +44 800 267 666

For additional support numbers please visit www.te.com

Cheminax Coaxial Cables (Continued)

Specifications/Approvals

Series	TE
Cheminax cables	1200

Product Dimensions (Nominal)

Typical Product Part No.	Impedance (ohms)	Capacitance pF/m (pF/ft)	Attenuation at 400 MHz dB/100m (dB/100 ft)	A Conductor Diameter	B Dielectric Diameter	C Shield Diameter	D Jacket Diameter	Weight in kg/km (lb/1000ft)
5012E1339	50	98.4 [30.0]	14.8 [4.5]	2.26 [.089]	7.24 [.285]	7.98 [.314]	10.24 [.403]	162.2 [109.0]
5012M1612	50	82.0 [25.0]	16.1 [4.9]	2.26 [.089]	6.07 [.239]	6.60 [.260]	7.06 [.278]	74.5 [50.1]
5024A1311	50	83.7 [25.5]	50.3 [15.3]	0.62 [.025]	1.70 [.067]	2.18 [.085]	2.67 [.104]	11.8 [7.9]
5026D1027	50	88.9 [27.1]	63.7 [19.4]	0.48 [.019]	1.27 [.050]	1.70 [.067]	2.21 [.087]	11.8 [7.9]
5030A1317	50	90.2 [27.5]	97.5 [29.7]	0.30 [.012]	0.79 [.031]	1.12 [.044]	1.57 [.062]	4.5 [3.0]
5030A1424	50	100.4 [30.6]	94.5 [28.8]	0.30 [.012]	0.86 [.034]	1.19 [.047]	1.60 [.063]	5.7 [3.8]
7520A1311	75	56.1 [17.1]	20.0 [6.1]	1.02 [.040]	4.57 [.180]	5.11 [.201]	6.12 [.241]	43.2 [29.0]
7524A1311	75	56.4 [17.2]	31.8 [9.7]	0.62 [.025]	2.82 [.111]	3.25 [.128]	3.86 [.152]	19.2 [12.9]
7528H1424	75	54.5 [16.6]	44.0 [13.4]	0.32 [.013]	1.37 [.054]	1.73 [.068]	2.13 [.084]	8.9 [6.0]
7530A1317	75	60.4 [18.3]	58.8 [17.9]	0.30 [.012]	1.35 [.053]	1.78 [.07]	2.29 [.09]	8.3 [5.6]
7530H1424	75	57.4 [17.5]	58.1 [17.7]	0.30 [.012]	1.30 [.051]	1.73 [.068]	2.03 [.08]	8.5 [5.7]
9522A1311	95	44.3 [13.5]	19.7 [6.0]	0.79 [.031]	5.51 [.217]	6.05 [.238]	7.32 [.288]	55.1 [37.0]
9527J1528	95	44.3 [13.5]	31.8 [9.7]	0.43 [.017]	2.84 [.112]	3.18 [.125]	3.58 [.141]	19.2 [12.9]
9530H1014	95	44.3 [13.5]	44.3 [13.5]	0.30 [.012]	1.83 [.072]	2.26 [.089]	2.62 [.103]	13.1 [8.8]

Note: All values are nominal.

Product Characteristics

General	Conductor Range Operating Temperature Range*	12 AWG to 30 AWG -65°C to 200°C [-85°F to 392°F]
Electrical	Impedance range Dielectric constant Velocity of propagation	50 ohms to 125 ohms 1.65–2.3 67%–80%

*Temperature rating varies depending on materials used in specific construction.

Small, Lightweight Coaxial Cables

Properties (per SCD)

Physical	Typical Value of Dielectric Material		
	Rayfoam L	Rayfoam H	Rayolin F
Tensile (min.)	6.8 MPa (1000 psi)	4.1 MPa (600 psi)	12.2 MPa (1800 psi)
Elongation (min.)	50%	50%	200%
Electrical			
Dielectric withstand (min.)	1000 V	1000 V	1000 V
Velocity of propagation (nom.)	78%	78%	67%
Dielectric constant	1.65	1.65	2.2

Physical	Type Value of Jacket Material					
	Thermorad	SPEC 55	FlexLine	FEP	Zerohal	SPEC 44
Tensile (min.)	13.6 MPa (2000 psi)	34 MPa (5000 psi)	20.4 MPa (3000 psi)	13.6 MPa (2000 psi)	8.2 MPa (1200 psi)	27.2 MPa (2500 psi)
Elongation (min.)	250%	50%	100%	200%	150%	150%
Temperature (max.)	125°C [257°F]	200°C [392°F]	200°C [392°F]	200°C [392°F]	125°C [257°F]	150°C [302°F]
Flammability*	Method C	Method B	Method B	Method B	Method B	Method B
Fluid category	C	A	A	A	C	B

*See TE specification WCD-1200 for details.

Solvents

Fluid category	A	B***	C
Fluid resistance	All	Hydrocarbons	Hydrocarbons 50˚C
		All fuels and lubes	Petroleum base fuels and lubes ≤50˚C
		Alcohols	Alcohols
		Cleaning fluids	Cleaning fluids
		Glycois	Synthetic fuels and lubes
			Glycols
			Ketones

**Test method per TE Specification 1200.
***Use caution with ketones.

Dimensions are shown for reference purposes only. Specifications subject to change.

Dimensions are in millimeters unless otherwise specified.

USA: +1 800 522 6752
Asia Pacific: +86 0 400 820 6015
UK: +44 800 267 666

For additional support numbers please visit www.te.com

Cheminax — High Performance Alternatives to Standard Cables (Continued)

TE Alternatives to RG Cables

RG/U	TE Alternative	Comments
4	5020A3311-0	Small/light
	5018D3311-0	Improved electricals
5	5018D3311-0	Small/light
8	5012E1339-0	Dimensionally similar
11	7518A1311-0	Small/light
29	5020A1311-0	Small/light
31	5012E1339-0	Dimensionally similar
55	5020A3311-0	Small/light
	5018D3311-0	Improved electricals
58	5021D1331-0	Dimensionally similar
	5020A1311-0	Small/light
	5018A1311-0	Improved electricals
59	7523D1331-0	Dimensionally similar
	7524A1311-0	Small/light
	7520A1311-0	Improved electricals
62	9524A1311-0	Small/light
63	2524A1311-0	Small/light
87	5012A3311-0	Small/light
89	5012A3311-0	Small/light
115	5012A3311-0	Small/light
122	5020A1311-0	Improved electricals
124	7524A1311-0	Small/light
133	9524A1311-0	Small/light
140	7524A1311-0	Small/light
141	5020A1311-0	Small/light
142	5019D3318-0	Small/light
	5018D3311-0	Improved electricals
144	7518A1311-0	Small/light
149	7518A1311-0	Small/light

RG/U	TE Alternative	Comments
159	5020A1311-0	Small/light
174	5026A1311-0	Small/light
	5024A1311-0	Improved electricals
178	5030A1317-0	Small/light
	5028A1317-0	Improved electricals
179	7530A1317-0	Small/light
	7528A1317-0	Improved electricals
180	9530E1014-0	Small/light
	9527A1318-9	Improved electricals
188	5026A1311-0	Small/light
	5024A1311-0	Improved electricals
210	9524A1311-0	Small/light
213	5012E1339-0	Dimensionally similar
214	5012A3311-0	Small/light
223	5019D3318-0	Small/light
	5018D3311-0	Improved electricals
225	5012A3311-0	Small/light
235	5012A3311-0	Small/light
279	7524A1311-0	Dimensionally similar
282	5024A1311-0	Small/light
302	7524A1311-0	Small/light
303	5020A1311-0	Small/light
304	5018A1311-0	Small/light
316	5026A1311-0	Small/light
	5024A1311-0	Improved electricals
393	5012A3311-0	Small/light
400	5020A3311-0	Small/light
	5018D3311-0	Improved electricals
403	5030A5314-0	Small/light

Note: To complement the mechanical and electrical features of Cheminax miniature coax cable, TE offers SolderSleeve, SolderTacts, and PinPak termination devices and RF connector devices. Controlled electrical cables and components are available for data bus systems.

Dimensions are shown for reference purposes only. Specifications subject to change.

Dimensions are in millimeters unless otherwise specified.

USA: +1 800 522 6752
Asia Pacific: +86 0 400 820 6015
UK: +44 800 267 666

For additional support numbers please visit www.te.com

Cheminax Twin Axial Cable

Small, Lightweight Twin Axial Cables

Product Facts

- Light weight, small size
- Temperature range of -65°C to 200°C [-85°F to 392°F]
- Low capacitance
- High data rates
- Excellent shop handling

Applications

These small, lightweight cables are specially designed for use in MIL-STD-1553 CANBUS, and other high speed data bus applications. TE materials technology allows the design and construction of cables that meet rigorous electrical and environmental performance requirements while minimizing size and weight.

Cheminax twin axial cables provide elegant solutions to an increasing range of data bus and multiplex signal transmission applications.

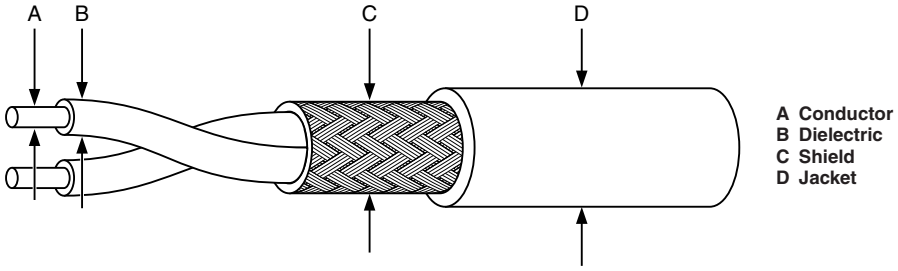

Available in:	Americas	Europe	Asia Pacific
	■	■	■

Dimensions are shown for reference purposes only. Specifications subject to change.

Dimensions are in millimeters unless otherwise specified.

USA: +1 800 522 6752
Asia Pacific: +86 0 400 820 6015
UK: +44 800 267 666

For additional support numbers please visit www.te.com

Cheminax Twin Axial Cables (Continued)

Specifications/Approvals

Series	TE
Cheminax cables	1200

Product Dimensions*

Typical Product Part No.	Impedance (ohms)	Capacitance pF/m(pF/ft)	A Conductor Diameter	B Dielectric Diameter	C Shield Diameter	D Jacket Diameter	Weight in kg/km (lb/1000ft)
5024A1661	50	104.7 [31.9]	.64 [.025]	0.89 [.035]	2.21 [.087]	2.62 [.103]	14.4 [9.7]
5026A1664	50	136.2 [41.5]	.48 [.019]	0.66 [.026]	1.75 [.069]	2.16 [.085]	10.0 [6.7]
7520A1662	75	74.2 [22.6]	1.02 [.040]	2.03 [.080]	4.60 [.181]	5.05 [.199]	42.9 [28.8]
7526J1660	75	88.6 [27.0]	.48 [.019]	0.99 [.039]	2.41 [.095]	2.82 [.111]	14.9 [10.0]
7820D0331	78	67.3 [20.5]	1.02 [.040]	2.11 [.083]	4.75 [.187]	5.72 [.225]	46.9 [31.5]
7824E0422	78	55.1 [16.8]	.64 [.025]	1.19 [.047]	2.82 [.111]	3.33 [.131]	19.6 [13.2]
0022E0311	100	49.2 [15.0]	.79 [.031]	1.98 [.078]	4.39 [.173]	5.16 [.203]	30.5 [20.5]
0024A0024	100	44.3 [13.5]	.64 [.025]	1.30 [.051]	3.02 [.119]	3.63 [.143]	25.1 [16.9]
0026A0024	100	44.0 [13.4]	.48 [.019]	1.14 [.045]	2.72 [.107]	3.23 [.127]	18.7 [12.6]
2524H0524	125	39.4 [12.0]	.64 [.025]	1.83 [.072]	4.09 [.161]	4.50 [.177]	25.3 [17.7]
2526E1114	125	36.1 [11.0]	.48 [.019]	1.40 [.055]	3.33 [.131]	3.73 [.147]	21.7 [14.6]
2530A0314	125	39.4 [12.0]	.30 [.012]	0.86 [.034]	2.16 [.085]	2.67 [.105]	10.6 [7.1]
10595-24	70	91.9 [28.0]	.64 [.025]	1.19 [.047]	2.82 [.111]	3.23 [.127]	17.9 [12.0]
10606-26	75	91.9 [28.0]	.53 [.021]	0.99 [.039]	2.41 [.095]	2.82 [.111]	13.4 [9.0]
10612-24	77	91.9 [28.0]	.64 [.025]	1.22 [.048]	2.90 [.114]	3.30 [.130]	23.7 [15.9]
10613-24	77	91.9 [28.0]	.64 [.025]	1.22 [.048]	3.33 [.131]	3.73 [.147]	39.0 [26.2]
10614-24	77	91.9 [28.0]	.64 [.025]	1.22 [.048]	3.73 [.147]	4.09 [.161]	40.3 [27.1]

*All dimensions are nominal.

Small, Lightweight Twin Axial Cables

Product Characteristics

General	Conductor range Operating temperature range*	20 AWG to 30 AWG -65°C to 200°C [-85°F to 392°F]
Electrical	Impedance range Capacitance range	50 ohms to 125 ohms 30 pF/ft to 10 pF/ft

*Temperature rating varies depending on materials used in specific construction.

Properties (per SCD)

Physical	Typical Value of Dielectric Material				
	Rayfoam L	Rayfoam H	Rayolin F	FEP (solid)	Radiation-Crosslinked XL ETFE
Tensile (min.)	6.8 MPa (1000 psi)	9.1 MPa (600 psi)	12.2 MPa (1800 psi)	6.8 MPa (1000 psi)	34 MPa (5000 psi)
Elongation (min.)	50%	50%	200%	150%	50%
Electrical					
Dielectric withstand (min.)	1000 V	1000 V	1000 V	1000 V	1000 V
Velocity of propagation (nom.)	78%	78%	67%	69%	61%
Permitivity (nom.)	1.65	1.65	2.2	2.1	2.7

Physical	Typical Value of Jacket Material					
	Thermorad	SPEC 55	FlexLine	FEP	Zerohal	SPEC 44
Tensile (min.)	13.6 MPa (2000 psi)	34 MPa (5000 psi)	20.4 MPa (3000 psi)	13.6 MPa (2000 psi)	8.2 MPa (1200 psi)	27.2 MPa (2500 psi)
Elongation (min.)	250%	50%	100%	200%	150%	150%
Temperature (max.)	125°C [257°F]	200°C [392°F]	200°C [392°F]	200°C [392°F]	125°C [257°F]	150°C [302°F]
Flammability*	Method C	Method B	Method B	Method B	Method B	Method B
Fluid category*	C	A	A	A	C	B

*See solvent Page 9-79 for details.

Catalog 1654025
Revised 3-13

www.te.com

Dimensions are shown for reference purposes only. Specifications subject to change.

Dimensions are in millimeters unless otherwise specified.

USA: +1 800 522 6752
Asia Pacific: +86 0 400 820 6015
UK: +44 800 267 666

For additional support numbers please visit www.te.com

SeaLAN Ethernet Cables

Product Facts

- **Low smoke, zero halogen**
- **Waterblocked cables tested using ASTM D1411 sea water solution**
- **Humidity resistant designs**
- **Lightweight**
- **Flexible**

Applications

TE SeaLAN family of waterblocked and non-waterblocked Ethernet cables, as described in MIL-DTL-24643/59 through /61, are qualified to meet the rigorous requirements of flammability, smoke emissions and halogen content. Waterblocked constructions meet severe waterblocking and humidity resistance requirements.

Cables are used in Ethernet applications for:

- Military vessels MIL-DTL-24643/59, /60 and /61
- Freighters
- Tankers
- Cruise Ships

Available in:	Americas	Europe	Asia Pacific
	■	■	■

Catalog 1654025
Revised 3-13

www.te.com

Dimensions are shown for reference purposes only. Specifications subject to change.

Dimensions are in millimeters unless otherwise specified.

USA: +1 800 522 6752
Asia Pacific: +86 0 400 820 6015
UK: +44 800 267 666

For additional support numbers please visit www.te.com

SeaLAN Ethernet Cables (Continued)

Product Offering

MIL Spec Part Description	Type	TE Description	Cable Description
M24643/59-01UO	LSC5FS-4	CEC-RWC-18982	24 AWG, solid bc, Al/polyester and drain wire
M24643/59-02UO	LSC5FSW-4	CEC-RWC-18983	Waterblocked, 24 AWG, solid bc, Al/polyester and drain wire
M24643/59-03UO	LSC5OS-4	CEC-RWC-18700	24 AWG, solid bc, Al/polyester and woven braid
M24643/59-04UO	LSC50SW-4	CEC-RWC-18600	Waterblocked, 24 AWG, solid bc, Al/polyester and woven braid
M24643/60-01UN	LSC5-4	CEC-RWC-18709	24 AWG, solid bc
M24643/60-02UN	LSC5W-4	CEC-RWC-18710	Waterblocked, 24 AWG, solid bc
M24643/61-01UN	LSC5P-4	CEC-RWC-19043	24 AWG, stranded tc
M24643/61-02UD	LSC5POS-4	CEC-RWC-18886	24 AWG, stranded tc, Al/polyester and woven braid
M24643/61-03UD	LSC5POSR-4	CEC-RWC-19172	26 AWG, stranded tc, Al/polyester and woven braid

Cable Constructions

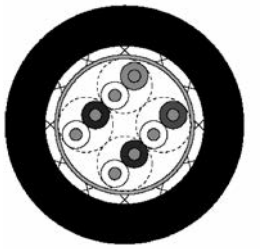

CEC-RWC-18700

CEC-RWC-18600

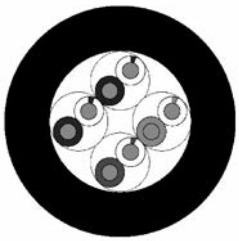

CEC-RWC-18709

Dimensions are shown for reference purposes only. Specifications subject to change.

Dimensions are in millimeters unless otherwise specified.

USA: +1 800 522 6752
Asia Pacific: +86 0 400 820 6015
UK: +44 800 267 666

For additional support numbers please visit www.te.com

SHF-260 Highly Flexible Wire

Product Facts

- **Currently available in sizes from 24 to 1/0 AWG**
- **Highly flexible small bend radius allows for fitting into complex routing**
- **Extreme temperature resistance for a wide range of applications**
- **Extruded polymer notch and abrasion resistant — mechanically tough**
- **Chemical and fluid resistance when tested to SAE-AS-22759/41**
- **Vibration stability allows a long life cycle in engine compartments**

TE Connectivity is pleased to announce the introduction of its new SHF-260 highly flexible wire. The need for a combination of high temperature and high performance in wire insulation has become a critical factor in today's platforms. This is especially true in large diameter power feeder applications where temperature and durability are key.

Its highly flexible characteristic allows the cable to be bent and routed in extremely tight areas with no wrinkling or cracking of the insulation.This results in being able to run shorter distances, reducing the stresson the contact, and reducing the mating and demating forces normally associated with large shell diameter circular connectors, such as MIL-C-5015 and MIL-C-83723 connectors.

Its ability to route in tight spaces may allow the user to go "up" in AWG sizes and eliminate the need to split power, where routing and bending previously prevented the user from doing so.

Applications

Typical uses include both primary and secondary power distribution aerospace, defense and marine applications where high amperage pass through is needed

Materials

Fluoropolymer based material

Standards & Specifications

TE Specification WCD3111

Application Spec SAE-AS-22759ASTM D1868FAR Part 25 - Flammability

Ordering Information

Contact TE

Thermal Properties

Temperature Rating:
-65˚C to +260˚C

Life Cycle:
290˚C for 500 hours

Cold Bend:
-65˚C for 4 hours

Thermal Shock Resistance:
Accordance with ASS22759 using an oven temperature of 260˚C

Physical Properties

Weight and Dimensions:
See TE Specification Control Drawings

Insulation Elongation:
150% elongation minimum

Tensile Strength:
2000 lbf/inch^2 minimum

Minimum Bend Radius:
290˚C for 500 hours around a mandrel having a diameter as specified in the applicable specification sheet

Wrap Test:
Accordance with ASS22759 using an oven temperature of 290˚C

Fire Hazard Properties

Flammability – 60˚ Flame:
Exceeds test requirements

Smoke:
Smoke resistance test specified in ASS22759 using an oven temperature of 290˚C

Electrical Properties

Voltage:
1000 volts (rms)

Insulation Resistance:
Minimum 50,000 Mohms/kft

Wire Printing

UV Laser Marking:
Excellent mark contrast

Catalog 1654025
Revised 3-13

www.te.com

Dimensions are shown for reference purposes only. Specifications subject to change.

Dimensions are in millimeters unless otherwise specified.

USA: +1 800 522 6752
Asia Pacific: +86 0 400 820 6015
UK: +44 800 267 666

For additional support numbers please visit www.te.com

Raychem MIL-DTL-24643 ZEROHAL PROFIBUS Cables

Product Facts

- **MIL-DTL-24643/62 qualified**
- **Waterblocked and non-waterblocked constructions**
- **Meets water tightness requirements when tested with ASTM D1411 synthetic sea water solution**
- **Suitable for transmission rates up to 12 megabits**
- **per second (MBits/S)**
- **Compatible with commercially available Profibus connectors**

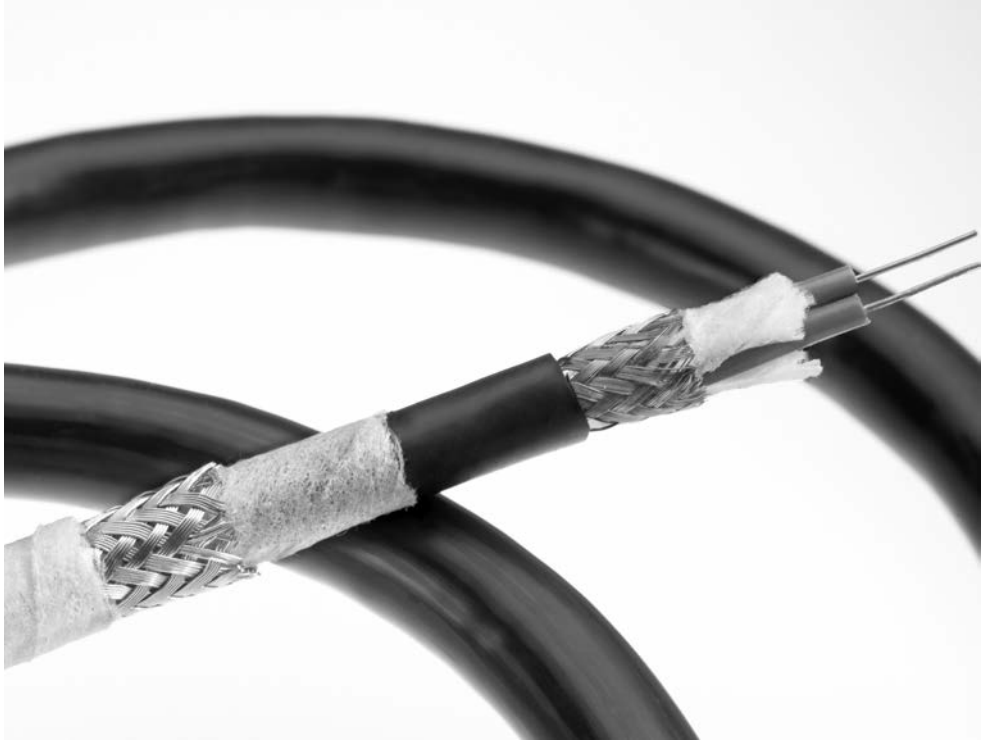

MIL-DTL-24643 has been the governing specification for low smoke, zero halogen insulated and jacketed shipboard cables used by the United States Navy and other military marine applications.

TE RAYCHEM brand ZEROHAL cables meeting the PROFIBUS standard as described in MIL-DTL-24643/62, are qualified to meet the rigorous requirements to flame, smoke emissions, halogen content and severe water-blocking requirements.

Applications

Cables are used in communications, machinery control monitoring and instrumentation for:

- Military vessels - MIL-DTL-24643/62
- Cruise ships
- Freighters
- Tankers
- Industrial Automation

Electrical

150 ohm impedance

Transmission rates up to 12 MBits/s

Attenuation (dB/100m maximum)

2 MHz:	1.0 dB
4 MHz:	2.5 dB
16 MHz:	5.0 dB
100 MHz:	13.5 dB
300 MHz:	24.0 dB

Materials

Foamed polyethylene components

Low smoke, Zerohal jacket

Standards & Specs

Raychem Specification 1200

Raychem Specification

345 MIL-DTL-26463/62

Available in:	Americas	Europe	Asia Pacific
	■	■	■

Catalog 1654025
Revised 3-13

www.te.com

Dimensions are shown for reference purposes only. Specifications subject to change.

Dimensions are in millimeters unless otherwise specified.

USA: +1 800 522 6752
Asia Pacific: +86 0 400 820 6015
UK: +44 800 267 666

For additional support numbers please visit www.te.com

Raychem MIL-DTL-24643 ZEROHAL PROFIBUS Cables (Continued)

Product Offering

Military Part Number	Type	TE Part Number	Description
M24643/62-01	LSPB2SD-1	5022M1809	22 AWG, bare copper, non-water blocked, shield and jacket
M24643/62-02	LSPB2SDW-1	5022W1809	22 AWG, bare copper, water blocked, shield and jacket
M24643/62-03	LSPB2SDOS-1	5022M5809	22 AWG, bare copper, non-water blocked, two shields and two jackets
M24643/62-04	LSPB2SDOSW-1	5022W0809	22 AWG, bare copper, water blocked, two shields and two jackets

Cable Constructions

5022M1809

5022M5809

5022W0809

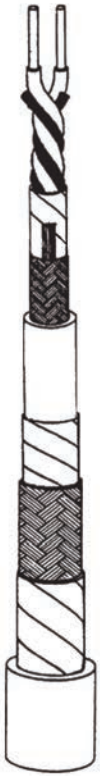

5022W1809

Dimensions are shown for reference purposes only. Specifications subject to change.

Dimensions are in millimeters unless otherwise specified.

USA: +1 800 522 6752
Asia Pacific: +86 0 400 820 6015
UK: +44 800 267 666

For additional support numbers please visit www.te.com

QUADLITE Quadraxial Cables

Product Facts

- 100 Ohm and 150 Ohm cables
- Materials rated from -65˚C to +200˚C [-85˚F to +392˚F]
- Low outgassing materials (PTFE, FEP)
- Custom design capabilities
- Proven technologies and materials
- Lightweight
- Low smoke and low toxicity
- Available in 150˚C and 200˚C rated construction

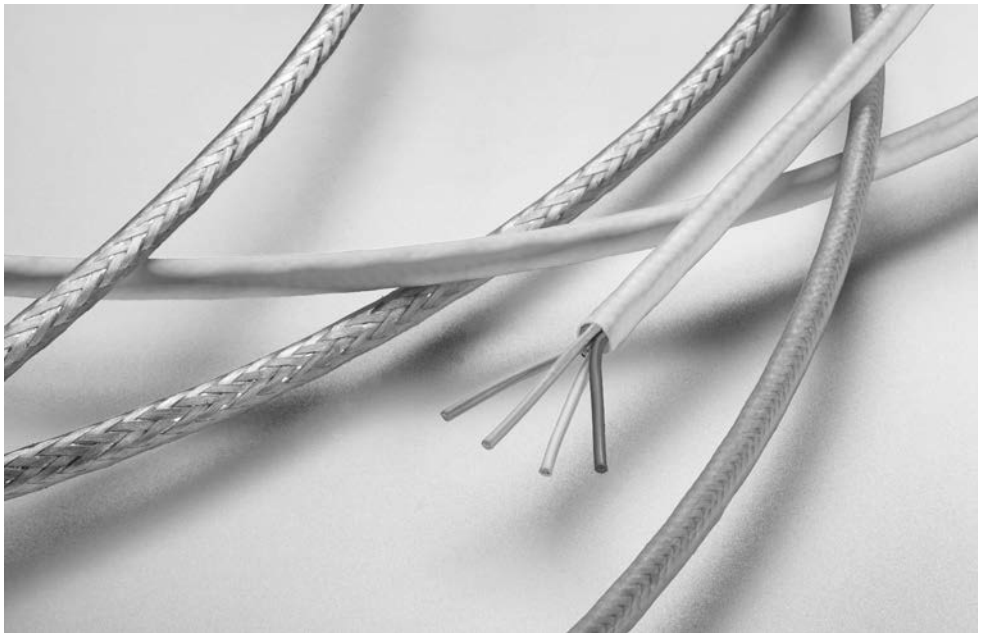

TE Quadlite family of lightweight, fluoropolymer cables are for use in high speed, high bandwidth applications such as 100Base-T, Gigabit Ethernet, IEEE 1394 and Fiber Channel employed in commercial avionics systems, aircraft data networks, in-flight entertainment systems and military communications.

The Quadlite cables are designed to meet the flammability requirements of FAR Part 25 and the rigorous smoke and toxicity requirements found in commercial aerospace standards such as EN3475.

Quadlite cables are to be used with the Quadrax contacts and connectors.

Applications

Cables are used in communications, control and instrumentation for:

- In-Flight Entertainment
- Satellite TV
- Flight Subsystems
- Military Communications

Materials

Dielectrics — Foamed FEP

Jacket — FEP

Standards and Specifications

TE Specification 1200

ANSI/TIA-568-B.2

IEEE 1394

ARINC 664

Available in:	Americas	Europe	Asia Pacific
	■	■	■

Catalog 1654025
Revised 3-13

www.te.com

Dimensions are shown for reference purposes only. Specifications subject to change.

Dimensions are in millimeters unless otherwise specified.

USA: +1 800 522 6752
Asia Pacific: +86 0 400 820 6015
UK: +44 800 267 666

For additional support numbers please visit www.te.com

QUADLITE Quadraxial Cables (Continued)

100 Base T Ethernet Cables
100 Ohms - 150˚C

TE Part Number	CEC-RWC-18634		CEC-RWC-18664		CEC-RWC-18666	
Conductor AWG Size (19 Strand)	26		24		22	
Conductor Material:	SCCA		SCCA		SCC	
Nom. Conductor Diameter (in.):	0.0185		0.0235		0.0295	
Insulation Material:	Formed FEP		Formed FEP		Formed FEP	
Nom. Insulation OD± 0.002 (in.):	0.037		0.042		0.057	
Nom. Cable OD (in.):	0.145		0.154		0.195	
Nom. Cable Weight (lbs/1 kft):	17.7		20.3		32.0	
Shield Material:	TCC		TCC		TCC	
Jacket Material:	FEP		FEP		FEP	
Impedance ± 10% (Ω):	100		100		100	
Temp. Rating:	150˚C		150˚C		150˚C	
Nom. Capacitance (pF/ft):	13.5		13.0		12.9	
Nom. Attenuation (dB/100 m):						
1 MHz	4.0		2.2		1.6	
10 MHz	10.5		6.8		5.9	
100 MHz	36.0		24.8		21.0	
	10 MHz	100 MHz	10 MHz	100 MHz	10 MHz	100 MHz
Min. NEXT (dB)	50	35	50	35	50	35
Min. SRL (dB)	23	16	23	16	23	16

TE Part Number	CEC-RWC-20555		CEC-RWC-20333	
Conductor AWG Size (19 Strand)	26		24	
Conductor Material:	SCCA		SCCA	
Nom. Conductor Diameter (in.):	0.0185		0.0235	
Insulation Material:	Formed FEP		Formed FEP	
Nom. Insulation OD± 0.002 (in.):	0.037		0.042	
Nom. Cable OD (in.):	0.144		0.153	
Nom. Cable Weight (lbs/1 kft):	18.7		22.2	
Shield Material:	TCC		TCC	
Jacket Material:	FEP		FEP	
Impedance ± 10% (Ω):	100		100	
Temp. Rating:	150˚C		150˚C	
Nom. Capacitance (pF/ft):	13.5		13.0	
Nom. Attenuation (dB/100 m):				
1 MHz	4.0		2.2	
10 MHz	10.5		6.8	
100 MHz	36.0		24.8	
	10 MHz	100 MHz	10 MHz	100 MHz
Min. NEXT (dB)	50	35	50	35
Min. SRL (dB)	23	16	23	16

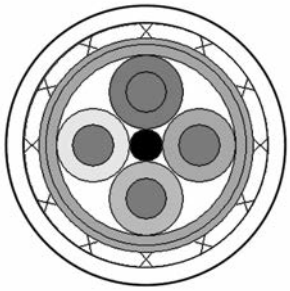

100BASE-T Ethernet

Dimensions are shown for reference purposes only. Specifications subject to change.

Dimensions are in millimeters unless otherwise specified.

USA: +1 800 522 6752
Asia Pacific: +86 0 400 820 6015
UK: +44 800 267 666

For additional support numbers please visit www.te.com

QUADLITE Quadraxial Cables (Continued)

100 Base T Ethernet Cables
100 Ohms - 200˚C

TE Part Number	CEC-RWC-18658		CEC-RWC-18687		CEC-RWC-18665	
Conductor AWG Size (19 Strand)	26		24		22	
Conductor Material:	SCCA		SCCA		SCC	
Nom. Conductor Diameter (in.):	0.0185		0.0235		0.0295	
Insulation Material:	Formed FEP		Formed FEP		Formed FEP	
Nom. Insulation OD± 0.002 (in.):	0.037		0.042		0.057	
Nom. Cable OD (in.):	0.144		0.153		0.194	
Nom. Cable Weight (lbs/1 kft):	18.7		22.2		34.3	
Shield Material:	SCC		SCC		SCC	
Jacket Material:	FEP		FEP		FEP	
Impedance ± 10% (Ω):	100		100		100	
Temp. Rating:	200˚C		200˚C		200˚C	
Nom. Capacitance (pF/ft):	13.5		13.0		12.9	
Nom. Attenuation (dB/100m):						
1 MHz	4.0		2.2		1.6	
10 MHz	10.5		6.8		5.9	
100 MHz	36.0		24.8		21.0	
	10 MHz	100 MHz	10 MHz	100 MHz	10 MHz	100 MHz
Min. NEXT (dB)	50	35	50	35	50	35
Min. SRL (dB)	23	16	23	16	23	16

Catalog 1654025
Revised 3-13

www.te.com

Dimensions are shown for reference purposes only. Specifications subject to change.

Dimensions are in millimeters unless otherwise specified.

USA: +1 800 522 6752
Asia Pacific: +86 0 400 820 6015
UK: +44 800 267 666

For additional support numbers please visit www.te.com

QUADLITE Quadraxial Cables (Continued)

Fiber Channel Cables
150 Ohms - 150˚C

TE Part Number	CEC-RWC-18680	CEC-RWC-18681	CEC-RWC-18682
Conductor AWG Size (19 Strand)	26	24	22
Conductor Material:	SCCA	SCCA	SCC
Nom. Conductor Diameter (in.):	0.0185	0.0235	0.0295
Insulation Material:	Formed FEP	Formed FEP	Formed FEP
Nom. Insulation OD± 0.002 (in.):	0.058	0.077	0.094
Nom. Cable OD (in.):	0.193	0.224	0.281
Nom. Cable Weight (lbs/1 kft):	23.4	38.3	57.2
Shield Material:	TCC	TCC	TCC
Jacket Material:	FEP	FEP	FEP
Impedance ± 10% (Ω):	150	150	150
Temp. Rating:	150˚C	150˚C	150˚C
Nom. Capacitance (pF/ft):	6.0	6.0	6.0
Nom. Attenuation (dB/100m):			
531 MHz	13	11	9
1062 MHz	21	17	13

150 Ohms - 200˚C

TE Part Number	CEC-RWC-18684	CEC-RWC-18685	CEC-RWC-18686
Conductor AWG Size (19 Strand)	26	24	22
Conductor Material:	SCCA	SCCA	SCC
Nom. Conductor Diameter (in.):	0.0185	0.0235	0.0295
Insulation Material:	Formed FEP	Formed FEP	Formed FEP
Nom. Insulation OD± 0.002 (in.):	0.058	0.077	0.094
Nom. Cable OD (in.):	0.192	0.247	0.284
Nom. Cable Weight (lbs/1 kft):	25.8	38.3	57.2
Shield Material:	SCC	SCC	SCC
Jacket Material:	FEP	FEP	FEP
Impedance ± 10% (Ω):	150	150	150
Temp. Rating:	200˚C	200˚C	200˚C
Nom. Capacitance (pF/ft):	6.0	6.0	6.0
Nom. Attenuation (dB/100m):			
531 MHz	13	11	9
1062 MHz	21	17	13

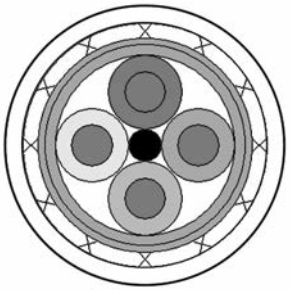

Fiber Channel

Dimensions are shown for reference purposes only. Specifications subject to change.

Dimensions are in millimeters unless otherwise specified.

USA: +1 800 522 6752
Asia Pacific: +86 0 400 820 6015
UK: +44 800 267 666

For additional support numbers please visit www.te.com

QUADLITE Quadraxial Cables (Continued)

4-Pair Cat 5E Constructions
100 Ohms - 150˚C/200˚C

TE Part Number	CEC-RWC-20412		CEC-RWC-21064		CEC-RWC-20638	
Conductor AWG Size (19 Strand)	24		24		26 (7 strand)	
Conductor Material:	SCHSCA		SCC		SCC	
Nom. Conductor Diameter (in.):	0.0235		0.0235		0.019	
Insulation Material:	Formed FEP		Formed FEP		Formed FEP	
Nom. Insulation OD± 0.002 (in.):	0.046		0.046		0.036	
Nom. Cable OD (in.):	0.279		0.249		0.204	
Nom. Cable Weight (lbs/1 kft):	46.2		39.5		29.8	
Shield Material:	TCC		TCC		SCC	
Jacket Material:	FEP		XL-ETFE		FEP	
Impedance ± 10% (Ω):	100		100		100	
Temp. Rating:	150˚C		150˚C		200˚C	
Nom. Capacitance (pF/ft):	13.5		13.5		13.5	
Nom. Attenuation (dB/100m):						
1 MHz	2.4		2.2		2.4	
100 MHz	7.5		6.8		8.8	
100 MHz	26.4		24.8		30.5	
	10 MHz	100 MHz	10 MHz	100 MHz	10 MHz	100 MHz
Min. NEXT (dB)	50	35	50	35	50	35
Min. SRL (dB)	25	19	25	19	23	16

Cat 6 Constructions
100 Ohms - 100˚C/90˚C

TE Part Number	CEC-RWC-20837		CEC-RWC-21088	
Conductor AWG Size (19 Strand)	23		23	
Conductor Material:	Bare Copper		Bare Copper	
Nom. Conductor Diameter (in.):	0.021		0.021	
Insulation Material:	Foamed PE		PE	
Nom. Insulation OD± 0.002 (in.):	0.046		0.046	
Nom. Cable OD (in.):	0.350		0.249	
Nom. Cable Weight (lbs/1 kft):	52.6		39.5	
Shield Material:	TCC		TCC	
Jacket Material:	FDR-25		Raythane	
Impedance ± 10% (Ω):	100		100	
Temp. Rating:	100˚C		90˚C	
Nom. Capacitance (pF/ft):	13.5		13.5	
Nom. Attenuation (dB/100m):				
1 MHz	1.8		1.8	
100 MHz	5.5		5.5	
100 MHz	18.3		18.3	
250 MHz	30.4		30.4	
	10 MHz	250 MHz	10 MHz	250 MHz
Min. NEXT (dB)	70	52	70	52
Min. SRL (dB)	36	24	36	24

Catalog 1654025
Revised 3-13

www.te.com

Dimensions are shown for reference purposes only. Specifications subject to change.

Dimensions are in millimeters unless otherwise specified.

USA: +1 800 522 6752
Asia Pacific: +86 0 400 820 6015
UK: +44 800 267 666

For additional support numbers please visit www.te.com

High Speed Copper Cable Assemblies

Product Facts

- **End-to-end best performance systems solutions provider**
- **Quick design turnaround using in-house software**
- **Full electrical and environmental testing capability**
- **Certified test processes and equipment ensures optimal signal integrity**
- **Qualified assembly experts**
- **Complete lot traceability**
- **Reliability in harsh environments**
- **ISO 9001; AS 9100 certified**

TE supplies proven technology for high bandwidth data links to customers in the aerospace, ground systems and marine industries. Military cable requirements are designed, manufactured and tested to perform reliably in harsh environments.

Proper cable assembly is critical to realizing the full potential of the cable and connector technologies. TE's lightweight military cables and connector solutions are designed to reduce size and remove weight from your application, leading to benefits that include reduced fuel consumption and increased payload capacity.

Data assemblies can be developed for the following high speed protocols:

- Military Fiber Channel
- Ethernet (Fast Ethernet, GigE, 10GigE)
- 1394b Military Firewire
- USB 3.0

and many other serial communication architectures.

Applications

Unmanned aerial vehicles (UAV), Helicopters, Fighters, Transport, Trainers, Missiles, Satellites, and Ground Vehicles

Applications include:

- Surveillance equipment, ground computing
- Communications
- Collision Avoidance, Navigation
- Cockpit Instrumentation
- Broadband Networks
- Command and Control

Electrical

Testing capabilities include:

- DWV/IR
- Characteristic Impedance
- Return Loss/VSWR
- Insertion Loss
- Crosstalk
- Attenuation
- Eye Diagrams
- etc.

Mechanical Tests Available:

- Vibration
- Mechanical Shock
- Mechanical Durability

Environmental Tests Available:

- Salt Spray
- Thermal Shock / Termperature Life
- Humidity / Fluid Immersion

Available in:	
Americas	■
Europe	■
Asia Pacific	■

Catalog 1654025
Revised 3-13

www.te.com

Dimensions are shown for reference purposes only. Specifications subject to change.

Dimensions are in millimeters unless otherwise specified.

USA: +1 800 522 6752
Asia Pacific: +86 0 400 820 6015
UK: +44 800 267 666

For additional support numbers please visit www.te.com

High Speed Copper Cables

Product Facts

- Reduced engineering time
- Compatibility with numerous TE contacts and TE termination devices
- Integrated solution
- Cost savings
- Custom solutions available
- Complexity reduction for straight forward installation
- Increased bandwidth
- EMI protection
- Lightning protection
- Ruggedized to survive in harsh environments
- Reduced size and weight

Description

TE Connectivity offers a large and growing range of High Speed Copper Cables for commercial and military aerospace, as well as ground systems and marine applications. Increased usages of high speed protocol such as Ethernet, Firewire, Fiber Channel and USB have become a necessity to be able to deliver information from one point to the next.

TE's high speed copper solutions along with TE's matched impedance contacts and connectors can provide a total solution. TE's total solution can increase the performance and the signal integrity while maintaining robustness in today's Aerospace, Defense and Marine applications.

TE's expansive research and development programs in material sciences are continually developing unique polymer solutions that will reduce weight and size while increasing robustness of our products

Applications

Military Aerospace: Situation Awareness Systems (radar); Weapons Systems (missiles); Communications (radio and intercoms)

Commercial Aerospace: In-Flight Entertainment; Glass Cockpit; In-flight Wireless

Military Ground Systems: Glass Dashboard; Integrated Computer System; Remote Weapons System; Radio and Intercom Communications; Situational Awareness (thermal imaging, vision systems);

Smart Soldier Systems: Live health monitoring; Real Time Soldier Movement; Portable computers

Materials

Conductor: Tin, Silver, Nickel or Copper

Also available in High Strength Alloys.

Electrical

Matched impedance connectors and cables

Electro-magnetic interferences protection

150-Ohm FiberChannel

100-Ohm Gigabit Ethernet

Mechanical

Small size, reduced complexity and weight

Design Flexibility

CAD for quick response

High product performance

Optimum layout

Rapid quotations

Size and weight details

Dielectric Solutions

TE has designed a new process for extruding Foamed FEP and other various jacket materials, allowing us the advantage of providing relatively uniform bubbles (void spaces) along the entire length of our cables.

This solution has a number of benefits which include increased electrical performance and integrity while maintaining mechanical robustness.

Excellent uniformity (void spaces); Excellent electrical performance; More robust product

Dimensions are shown for reference purposes only. Specifications subject to change.

Dimensions are in millimeters unless otherwise specified.

USA: +1 800 522 6752
Asia Pacific: +86 0 400 820 6015
UK: +44 800 267 666

For additional support numbers please visit www.te.com

High Speed Copper Cables (Continued)

HSC - part numbering system "high-speed conductor"

Example:

C5E - 26 B 1 2 4 - 7 1 4 - 9X

Variation Code (3-digits):

3EA	IEEE1394a	C6X	CAT6	DSP	Display Port	LVD	LVD
3EB	IEEE1394b	C7E	CAT7e	DVI	DVI	TGX	1000B-T Quad
C5E	CAT5e	C7X	CAT7	FBC	Fiber Channel	THX	100B-T Quad
C6A	CAT6a	CBS	Canbus	HDM	HDMI	UB2	USB 2.0
						UB3	USB 3.0

Conductor AWG Size (Data Pair):

Conductor Stranding (Data Pair):

A	Solid	B	7 Strand	C	19 Strand

Conductor Material (Data Pair):

1	Tin-coated copper	9	Bare copper
2	Silver-coated copper	0	Other
3	Nickel-coated copper	A	Silver-coated ultra high-strength copper alloy
4	Silver-coated high-strength copper alloy		
6	Nickel-coated high-strength copper alloy		

Dielectric Material (Data Pair):

1	Rayfoam L	5	UXL-ETFE	0	Other
2	Rayfoam H	6	XL-ETFE	L	Low Fluoride XL-ETFE
3	Rayolin F	7	Flexible XL-ETFE		
4	Modified FEP	8	Rayfoam FS		

Number of Data Pairs:

1 - 10 (designator for 10 conductor = 0)

Special Construction (P-Line = Power Line):

-	Standard	C	26 AWG (P-Line)	F	20 AWG (P-Line)	W	Waterblocked
A	30 AWG (P-Line)	D	24 AWG (P-Line)	G	18 AWG (P-Line)	X	Special construction
B	28 AWG (P-Line)	E	22 AWG (P-Line)	S	Space rated		

Shield Type:

See page 2.

Shield Material (each, when more than one shield):

1	Tin-coated copper	4	Silver-coated high-strength copper alloy
2	Silver-coated copper	U	Unshielded
3	Nickel-coated copper		

Jacket Material (each, when more than one jacket):

1	Thermorad K	8	Zerohal	M	Laser Markable FEP
3	Thermorad F & S	9	None	N	Thermorad NTFR
4	Modified FEP	0	Other	R	Raythane FR
5	UXL-ETFE	C	Raythane C	T	Thermorad O
6	Thermorad HT	F	FDR-25	W	PET wrap
7	Thermorad FL	L	Low Fluoride XL-ETFE		

Outer Jacket Color (code per MIL-STD-681, except as noted):

(For translucent colors, an "X" is added to the end of the color.
Example: 9X = Translucent White)

0	Black	3	Orange	6	Blue	9	White
1	Brown	4	Yellow	7	Violet	X	Clear
2	Red	5	Green	8	Gray		

Rayfoam, Rayolin, Raythane, Thermorad, and Zerohal are trademarks.

Dimensions are shown for reference purposes only. Specifications subject to change.

Dimensions are in millimeters unless otherwise specified.

USA: +1 800 522 6752
Asia Pacific: +86 0 400 820 6015
UK: +44 800 267 666

For additional support numbers please visit www.te.com

High Speed Copper Cables (Continued)

Description

Ethernet

Ethernet Category Cables

Markets: Commercial and MIL Aero, Marine, Military Ground Systems

Speeds: 10 Mbits/s to 10 Gbit/s

Common Names: Quadrax, Cat5e, Cat6, Cat 6a, Cat7

Primary Usage: Generalized Data Communications

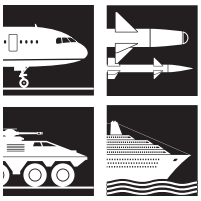

Firewire

FireWire/IEEE 1394

Markets: Aerospace Commercial and Military

Speeds: 100 Mbits/s to 3.2 Gbit/s

Primary Usage: High Data Rate Communication; Bus Independent

DVI

Digital Video Interface (DVI)

Markets: Marine and Ground Systems

Primary Usage: Video Displays, Uni-Directional Data Transfer

Fiber Channel

Fiber Channel

Markets: Aerospace

Speeds: 200 MB/s to 1.6 GB/s

Primary Usage: Storage Technologies and Long Distance Communications

USB-2.0

Universal Serial Bus (Hi-Speed)

Markets: Aerospace, Ground Systems, Marine, Missiles

Speeds: up to 480 Mbit/s

Primary Usage: Universal Data Transfer- requires computing system to function

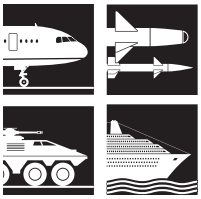

USB-3.0

Universal Serial Bus (Super-Speed)

Markets: Aerospace, Ground Systems, Marine, Missiles

Speeds: 5 Gbit/s

Primary Usage: Universal Data Transfer- requires computing system to function

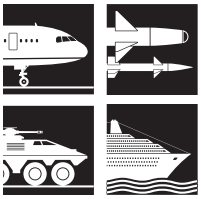

Catalog 1654025
Revised 3-13

www.te.com

Dimensions are shown for reference purposes only. Specifications subject to change.

Dimensions are in millimeters unless otherwise specified.

USA: +1 800 522 6752
Asia Pacific: +86 0 400 820 6015
UK: +44 800 267 666

For additional support numbers please visit www.te.com

High Speed Copper Cables (Continued)

Compatible Products

The listing below is an “example” only of compatible products. For additional information, contact TE.

CeeLok FAS-T Connector

Molded Shapes

Band Straps

SolderSleeve Termination Devices

Gigabit Ethernet Connectors

EN4165

Quadrax Contacts

Twinax Contacts

Jacket Materials

Jacket Materials	Temperature Range (˚C)	Abrasion Resistance	Flexibility	Typical Industry Use
Thermorad K (Modified PVDF)	-65 to +150	Very Good	Fair	Aerospace, Ground and Marine
Thermorad F & S	-55 to +125	Good	Good	Ground Systems
Modified FEP	-65 to +200	Good	Good	Aerospace
UXL-ETFE	-65 to +150	Good	Fair	Aerospace and Ground Systems
Thermorad HT (Modified ETFE)	-65 to +200	Very Good	Fair	Aerospace
Thermorad FL	-55 to +200	Very Good	Good	Aerospace
Zerohal	-30 to +105	Good	Good	Marine
FDR-25	-40 to +105	Fair	Excellent	Ground Systems
Low Fluoride XL-ETFE	-65 to +200	Very Good	Fair	Aerospace
Laser Markable FEP	-65 to +200	Good	Good	Aerospace
Thermorad NTFR	-55 to +110	Good	Excellent	Ground Systems and Marine
Raythane FR	-65 to +90	Excellent	Excellent	Marine
Thermorad O	-55 to +125	Good	Good	Ground Systems and Marine

Catalog 1654025
Revised 3-13

www.te.com

Dimensions are shown for reference purposes only. Specifications subject to change.

Dimensions are in millimeters unless otherwise specified.

USA: +1 800 522 6752
Asia Pacific: +86 0 400 820 6015
UK: +44 800 267 666

For additional support numbers please visit www.te.com

Custom-designed and standard Multiconductor (Multicore) Cables

Product Facts

- Temperature capability: -55°C to +260°C [-67°F to +500°F]
- Small size, lightweight
- System compatibility with other Raychem products
- Complete range of components
- Specially formulated jacket materials
- Special shielding to address EMI/EMC problems
- Custom designed and purpose built
- Fast response—design, pricing, and delivery
- Prototype length facility
- Raychem Dynalink for extended flex-life and increased flexibility
- Fire-resistance; circuit integrity (IEC60331), enhanced 950˚C [1742˚F, 3 hours]
- Small size, lightweight, low fire-hazard for modern high-speed vessels

Applications

TE is the leading manufacturer of Raychem custom-designed, small-size, lightweight, high-performance multi-conductor (multicore) cables. Applications are found in the aerospace, commercial marine, naval, mass transportation, automotive, offshore, military ground vehicle, ground support, high-performance instrumentation, industrial, and commercial markets. Raychem multiconductor (multicore) cables have been approved to many standards demanding high performance criteria in service use.

Multiconductor (Multicore) Cables Purpose Built and Designed Using Raychem Components and Technology

Multiconductor cables are used in widely varying applications and environments. Careful consideration must be given to the selection of components with the right combination of physical, chemical, and electrical properties for specific applications.

TE's leadership in the technologies of polymer blending and subsequent radiation crosslinking has led to the development of a particularly broad range of Raychem brand cables. High-performance component wires and miniature coaxial cables are combined with unique cable jacket materials to meet the requirements of demanding environments.

Established as the leading manufacturer of special purpose Raychem cables, TE has continued to develop both its design and manufacturing expertise.

Development of a sophisticated CAD system has allowed increasingly rapid response to any design request, followed by manufacturing to the highest quality standards.

Available in:	
Americas	■
Europe	■
Asia Pacific	■

Specifications/Approvals

Agency	Industry	Military	TE
Underwriters' Laboratories	Lloyd's Register of Shipping	Def. Stan 61-12 Pt 25	WCD series
CSA (Canadian Standards Assn.)	Det Norske Veritas	MIL-DTL-24640	
ISO9001:2000		MIL-DTL-24643	
MSV 34410-34413; 34435; 34436		VG 95218 Pts 27 and 28	
ANSI/ISO/ASQ Q9001-2000			

Dimensions are shown for reference purposes only. Specifications subject to change.

Dimensions are in millimeters unless otherwise specified.

USA: +1 800 522 6752
Asia Pacific: +86 0 400 820 6015
UK: +44 800 267 666

For additional support numbers please visit www.te.com

Multicore Cables

Design Flexibility

Components

- SPEC 44 wire and cable
- SPEC 55 wire and cable
- Type 99 wire and cable
- 100 wire and cable
- ElectroLoss FilterLine cables
- Flexible power cables
- Optical fibers
- Controlled electrical cables

Wraps and Braids

- Fabric and film tapes
- Aramid or steel strength members
- Full range of electrical screens (including SuperScreens)

Jacket Materials

■ FDR 25	- Fluid resistant, flexible, high temperature
■ Thermorad/ Thermorad F	- General purpose
■ Thermorad HTF	- Very high temperature fluoroelastomer, fluid resistant
■ Raythane C	- Tough and flexible
■ Raythane FR	- Tough, flexible, flame-retardant
■ Rayolin	- Low moisture transmission
■ NT/ Thermorad NTFR	- Low-temperature flexibility
■ Zerohal	- LFH (Low Fire Hazard)

Dimensions are shown for reference purposes only. Specifications subject to change.

Dimensions are in millimeters unless otherwise specified.

USA: +1 800 522 6752
Asia Pacific: +86 0 400 820 6015
UK: +44 800 267 666

For additional support numbers please visit www.te.com

How to Build a Multicore Cable

This guide is designed to help you identify the building blocks necessary to create a custom multi-core cable design.

1. **What is your application/end-use?**

2. **What temperature rating is required (in degrees C)?**

3. **How many components are needed?**

4. **What is each component used for (data, signal or power)?**

5. **What would be the size of each of the components (in AWG)?**

6. **Are there any electrical shielding (EMI) requirements? If so, please list specifics (ex: component shielding, cable shielding)?**

7. **Are there specific flexibility, mechanical, or fluid resistance requirements? If so, please list specifics and rank the order of importance.**

8. **Do you require special lengths?**

9. **Is there a customer specification involved? If so, please provide a copy.**

10. **Please list any timelines and annual usage estimates.**

Catalog 1654025
Revised 3-13

www.te.com

Dimensions are shown for reference purposes only. Specifications subject to change.

Dimensions are in millimeters unless otherwise specified.

USA: +1 800 522 6752
Asia Pacific: +86 0 400 820 6015
UK: +44 800 267 666

For additional support numbers please visit www.te.com

Computer Aided Design

Custom Design Capability

Applications

Every year, TE designs and builds several thousand custom, high-performance, multiconductor cables that meet unique product needs.

Design staff can draw on an extensive range of high-performance cable components and jacket materials, while incorporating both color-coding and alphanumeric marking techniques for component identification. These options, combined with a full range of EMI shields, lead to a huge variety of construction possibilities.

TE developed computer-aided design tools to provide a fast response to design requests. The software, used by factory engineers or product specialists in the field, can generate cable design proposals with drawings and quotations in minutes. A design drawing details all the cable data and can be used as the input to harness or cable splice (joint) design. The resulting cable is tailored to customers' exact needs in an efficient design that is superior to the competitor's cable selected from a product catalog.

Quality Assurance

Raychem WCD and WSD cable specifications ensure that performance and quality standards are maintained to the highest level. TE manufacturing sites have obtained the highest available quality system approvals, including ISO 9000 and QS9000. Raychem cables are manufactured to meet the requirements of several major specifications.

Available in:	
Americas	■
Europe	■
Asia Pacific	■

Catalog 1654025
Revised 3-13

www.te.com

Dimensions are shown for reference purposes only. Specifications subject to change.

Dimensions are in millimeters unless otherwise specified.

USA: +1 800 522 6752
Asia Pacific: +86 0 400 820 6015
UK: +44 800 267 666

For additional support numbers please visit www.te.com

Custom Shipboard Cables

Product Facts

- **Waterblocked cables are available using tapes and yarns vs. silicone, which improves size and flexibility**
- **Low smoke, zero halogen jackets compliant with current MIL Spec applications**
- **Small order quantities available on most designs**
- **Lightweight state-of-the-art cable insulation technology**
- **TE design specialists work directly with customers**
- **RoHS products available**

Applications

TE offers a full range of customized shipboard cables that can save users time, money and weight by packaging multiple cables into a single zero-halogen jacket per MIL-DTL-24640 specification.

Cables can be used for a variety of applications including control, lighting, signal and power.

Consolidation of individual cables for various applications including weapons and communications systems.

Data and power cables can be combined in the same bundle to decrease weight and size on cable runs.

Available in:	
Americas	■
Europe	■
Asia Pacific	■

Catalog 1654025
Revised 3-13

www.te.com

Dimensions are shown for reference purposes only. Specifications subject to change.

Dimensions are in millimeters unless otherwise specified.

USA: +1 800 522 6752
Asia Pacific: +86 0 400 820 6015
UK: +44 800 267 666

For additional support numbers please visit www.te.com

RayBraid Tubular Braiding

Tubular Braiding for the Electrical Screening of Wire Bundles

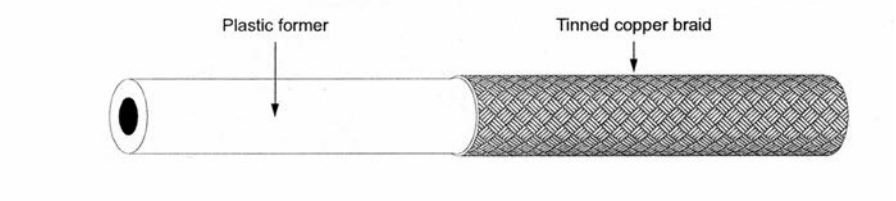

Product Facts

- **Screening for military harnesses**
- **Easy removal from former**
- **Minimum 90% optical coverage**
- **Ray 101 and Ray 103 super flexible with high expansion ratios**

To ease the assembly of hand built harnesses, TE manufactures a range of braids for the electrical screening of wire bundles.

RayBraid is supplied on a tube former which facilitates assembly and is more robust than braid supplied in flattened form.

TE also supplies connectors suitable for braid terminations.

Applications

When stored under typical conditions of less than 30Â˚C and less than 70% relative humidity, the shelf life of the wire is effectively unlimited. Where the product contains a standard tin plated or bare copper conductor or braid there will be a progressive reduction in the solderability with increasing storage time. Under the conditions mentioned above, excellent solderability should be retained for about one year from manufacturing date, but if this is an important property, it should be checked before use. The suitability of the tin plated or bare copper conductor for use with crimped or welded termination techniques will not be affected by storage time.

Silver and nickel plated conductors are essentially unaltered by normal storage.

Types

Ray 90 (Tinned Copper Braid):

- Minimum 90% optical coverage available in 10 different sizes from 3.0 to 30.0 mm supplied diameter.

Ray 101 (Tinned Copper Braid):

- Minimum 93% maximum 100% optical coverage possess high usable expansion ratio (minimum 2:1).
- Available in a wide range of sizes to cover 2.5 to 38.0 mm diameters.
- Fully compatible with Tinel-Lock adapters for termination of the braid to associated connectors.

Ray 103 (Nickel Copper Braid):

- Minimum 93% maximum 100% optical coverage possess high usable expansion ratio (minimum 2:1).
- Available in a wide range of sizes to cover 2.5 to 38.0 mm diameters.
- Fully compatible with Tinel-Lock adapters for termination of the braid to associated connectors.

Operating Temperature Range

Ray 90:
up to 150˚C [302˚F]

Ray 101:
up to 150˚C [302˚F]

Ray 103:
above 150˚C [302˚F]

Catalog 1654025
Revised 3-13

www.te.com

Dimensions are shown for reference purposes only. Specifications subject to change.

Dimensions are in millimeters unless otherwise specified.

USA: +1 800 522 6752
Asia Pacific: +86 0 400 820 6015
UK: +44 800 267 666

For additional support numbers please visit www.te.com

RayBraid Tubular Braiding (Continued)

Characteristics

	Part Number	Diameter of former (mm)	Tinned Copper Wire: No. of Carriers	No. of Ends per Carrier	Individual Strand Size (AWG/mm)	Minimum Coverage (%)	Cable Bundle Tolerance: Maximum (mm)	Minimum (mm)
Ray 90	-3.0	3.0 ± 0.13	16	5	36/0.13	90	3.5	2.0
	-4.0	4.0 ± 0.25	16	7	36/0.13	90	5.0	3.0
	-5.0	5.0 ± 0.25	24	6	36/0.13	90	6.0	4.0
	-6.0	6.0 ± 0.25	24	7	36/0.13	90	7.0	5.0
	-10.0	10.0 ± 0.25	24	9	34/0.16	90	12.0	7.0
	-12.5	12.5 ± 0.25	24	10	34/0.16	90	13.0	11.0
	-15.0	15.0 ± 0.38	24	11	32/0.20	90	18.0	13.0
	-20.0	20.0 ± 0.38	36	7	32/0.20	90	23.0	17.0
	-25.0	25.0 ± 0.38	36	9	30/0.25	90	28.0	22.0
	-30.0	30.0 ± 0.38	36	9	28/0.32	90	36.0	27.0
Ray 10X	-3.0	3.0 ± 0.13	16	10	38/0.10	93	5.0	2.5
	.4.0	4.0 ± 0.25	24	7	36/0.13	93	7.5	3.5
	-6.0	6.0 ± 0.25	24	9	36/0.13	93	9.5	4.5
	-7.5	7.5 ± 0.25	24	14	36/0.13	93	14.0	7.0
	-10.0	10.0 ± 0.25	36	12	36/0.13	93	22.0	8.0
	-12.5	12.5 ± 0.25	36	15	36/0.13	93	24.0	11.0
	-20.0	20.0 ± 0.38	48	16	36/0.13	93	38.0	16.0

The X in the part number shall be replaced with the plating type.

Weight

Part Number	Ray -90 Weight (excluding former) kg/km (nom)	Ray -101 Weight (excluding former) kg/km (nom)
-3.0	13	10.3
-4.0	17	17.0
-5.0	21	—
-6.0	25	25.0
-7.5	52	31.0
-10.0	52	41.0
-12.5	65	51.0
-15.0	100	—
-20.0	165	81.0
-25.0	207	—
-30.0	310	—

Resistance

The following current ratings are to be used as general guidelines. Ratings based on an ambient temperature of 20˚C and a temperature rise above ambient of 40˚C.

Part Number	Ray -90: CSA mm2	Resistance @ 20˚C in ohms/km	Current (amps)	Ray 101: CSA mm2	Resistance @ 20˚C in ohms/km	Current (amps)	Ray 103: Resistance @ 20˚C in ohms/km
-3.0	1.0	28.0	17	1.3	17.0	18	17.3
-4.0	1.4	18.3	21	2.1	10.3	28	10.5
-5.0	1.8	13.8	25	—	—	—	—
-6.0	2.1	12.2	28	2.7	8.0	34	8.1
-7.5	—	—	—	4.3	5.2	42	5.23
-10.0	4.3	6.0	42	5.5	3.96	52	4.02
-12.5	4.8	6.1	48	6.8	3.23	57	3.28
-15.0	8.3	3.0	67	—	—	—	—
-20.0	12.8	2.2	81	9.7	2.32	69	2.35
-25.0	16.4	1.6	98	—	—	—	—
-30.0	26.0	1.0	125	—	—	—	—

Dimensions are shown for reference purposes only. Specifications subject to change.

Dimensions are in millimeters unless otherwise specified.

USA: +1 800 522 6752
Asia Pacific: +86 0 400 820 6015
UK: +44 800 267 666

For additional support numbers please visit www.te.com

Properties and Specifications

Specifications and Approvals (Components and Jacket Materials)

Specifications UK Designation	FDR 25	Zerohal	Fluoro-elastomer	Thermorad	Rayolin	Raythane C	AFR	NT	44 Wire	55 Wire	100 Wire	99 Wire	Hytrel
US Designation	**FDR 25**	**Zerohal**	**Thermorad HTF**	**Thermorad F**		**Raythane FR**		**Thermorad NTFR**	**44 Wire**	**55 Wire**	**100 Wire**		
Def Stan 61-12 Part 31		X											
Def Stan 61-12 Part 25		X							X			X	
Def Stan 61-12 Part 18 type 1 (issue in effect)		X										X	
Def Stan 61-12 Part 26									X				
34435, 34436		X							X				
VG 95218 Part 20, 21, 22 and 23									X	X	X		
VG 95218 Part 24, 25 and 26	X												
VG 95218 Part 27 and 28	X	X							X		X		
VG 95218 Part 1000									X				
VG 95218 Part 1001 and 1002										X			
MIL-DTL-24640 (PMS 400/MII-C-915)		X							X				
SAE-AS-81044/NEMA WC27500									X				
SAE-AS-22759/NEMA WC27500										X			
A014000		X										X	
O2-517		X			X				X				
MIL-DTL-24643		X											
Approvals													
Lloyds Register of Shipping		X		X		X			X			X	
Bureau Veritas	X	X	X	X		X	X	X	X	X			
UL				X		X (FR)	X		X	X			
CSA									X	X			
BWB	X			X					X	X			
VDE	X			X					X	X			
Germanischer Lloyd		X									X		
American Bureau of Shipping		X									X		

* Please check with your TE representative to ensure the product required has the correct approval.

Catalog 1654025
Revised 3-13

www.te.com

Dimensions are shown for reference purposes only. Specifications subject to change.

Dimensions are in millimeters unless otherwise specified.

USA: +1 800 522 6752
Asia Pacific: +86 0 400 820 6015
UK: +44 800 267 666

For additional support numbers please visit www.te.com

Properties and Specifications (Continued)

Major Cable Specifications

Country	Cable Specification	Specification Description	Approved Jacket
UK	Def Stan 61-12 Part 25	Royal Navy specification covering limited fire hazard thin-wall insulated electric cables using Def-Stan 61-12 Part 18 approved wire. Signal, control and light power circuits.	Zerohal
Germany	VG 95218 (parts 27 and 28)	Military ground systems specification for signal, control and power cables. Wire to VG 95218 Parts 20-23 and 1000.	FDR-25
USA	MIL-C-24640 (PMS 400/MIL-C-915)	Navy specification covering limited fire hazard thin-wall insulated electric cables for signal, control and light power circuits. Wire to SAE-AS81044.	Zerohal
USA	MIL-DTL-24643	Navy specification covering low smoke, watertight, and non-watertight electric cables for signal, control, and light power circuits for shipboard applications.	Zerohal

Summary of Typical Cable Jacket Properties

UK Designation	US Designation	Property						Chemical Resistance		
		Temperature Range °C*	Abrasion Resistance	Flexibility	Tensile Strength (MPa)	Elongation %	Flame Resistance	Acid	Alkaline	Hydrocarbon
FDR25	FDR25	-40 to 105	Fair	Very Good	20	500	Self-ext;ing	Good	Good	Very Good
Zerohal	Zerohal UK & US	-30 to 105	Good	Good	10	200	Self-ext;ing	Good	Good	Good
Fluoroelastomer	Thermorad HTF	-20 to 200	Good	Good	12	400	Nonburning	Excellent	Excellent	Excellent
Thermorad	Thermorad F	-55 to 125	Good	Good	22	400	Self-ext;ing	Good	Good	Good
Raythane C	—	-25 to 80	Excellent	Excellent	40	500	Self-ext;ing	Fair	Fair	Excellent
—	Raythane FR	-65 to 90	Excellent	Excellent	28	500	Self-ext;ing	Fair	Fair	Excellent
NT	Thermorad NTFR	-55 to 110	Very Good	Excellent	17	300	Self-ext;ing	Good	Good	Good
Rayolin	—	-55 to 95	Very Good	Fair	19	250	Self-ext;ing	Good	Good	Good
AFR	—	-40 to 105	Excellent	Good	10	150	Self-ext;ing	Good	Good	Good
—	Thermorad O	-55 to 125	Good	Good	15	400	Self-ext;ing	Good	Good	Good
—	Thermorad 770	-55 to 175	Very Good	Good	35	500	Nonburning	Excellent	Excellent	Excellent
—	Thermorad 780	-55 to 200	Very Good	Good	24	350	Nonburning	Excellent	Excellent	Excellent
—	Thermorad 790	-55 to 250	Very Good	Good	30	350	Nonburning	Excellent	Excellent	Excellent
Modified PVDF	Thermorad K	-65 to 150	Very Good	Fair	20	400	Nonburning	Excellent	Excellent	Excellent
Modified ETFE	Thermorad HT	-65 to 200	Very Good	Fair	34	100	Self-ext;ing	Excellent	Excellent	Excellent
Modified Flexible ETFE	Thermorad FL	-55 to 200	Very Good	Excellent	20	100	Self-ext;ing	Excellent	Excellent	Excellent
—	Thermorad HTOS	-65 to 200	Very Good	Very Good	34	100	Self-ext;ing	Excellent	Excellent	Excellent
—	Thermorad HTLF	-65 to 200	Very Good	Very Good	34	100	Self-ext;ing	Excellent	Excellent	Excellent
—	Thermorad HTASLF	-65 to 200	Very Good	Very Good	34	100	Self-ext;ing	Excellent	Excellent	Excellent
—	Thermorad VPB	-65 to 200	Very Good	Very Good	23	500	Self-ext;ing	Excellent	Excellent	Excellent

*Operating temperatures for cables are application dependent. Figures shown are for guidance only. In many cases the limits shown may be extended at both ends of the temperature range. Consult TE for guidance.

FDR25

Flexible, Diesel Resistant Wire and Cable Jacket Material

Product Facts

- Highly flame retardant
- Compatible with Raychem System 25 tubing, molded parts and adhesives
- Qualified to VG standards

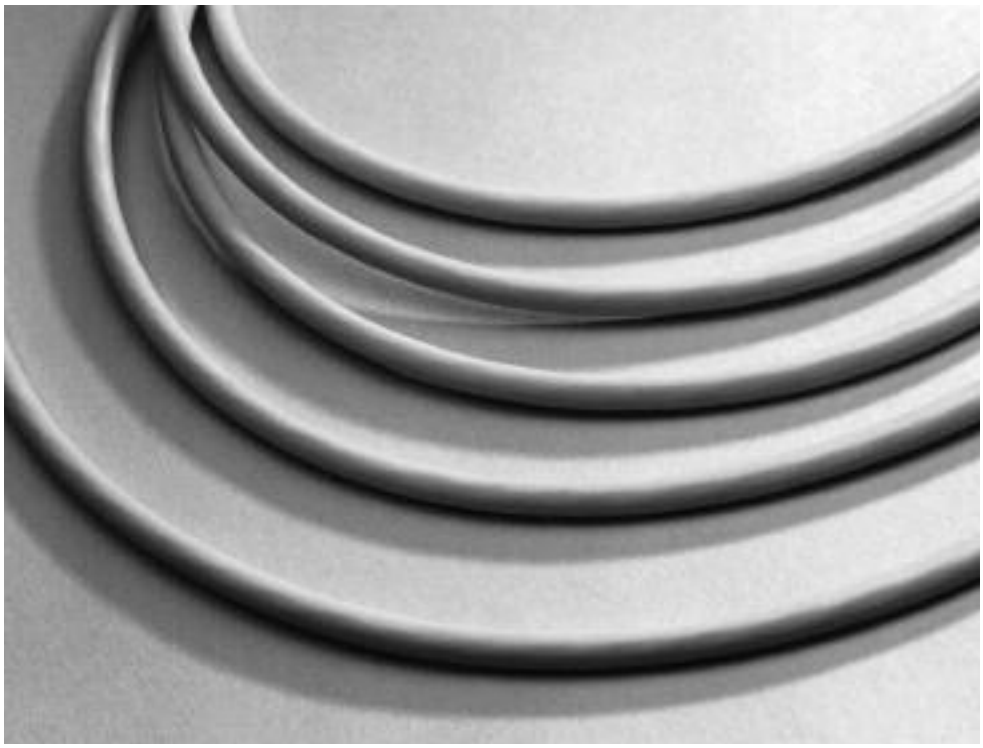

Applications

FDR 25 cable jacket was originally developed for the Leopard II main battle tank to provide an exceptional range of properties. Used in compartments exposed to hot diesel fuels and vibration, FDR 25 resists a wide range of aggressive fluids and offers excellent low temperature flexibility. These properties have also led to a widespread use of FDR 25 on other military vehicles and in many applications such as test and communications equipment. FDR 25 is fully compatible with the Raychem System 25 high performance harnessing system.

Operating Temperature Range

-40°C to 150°C
[-40°F to 302°F]

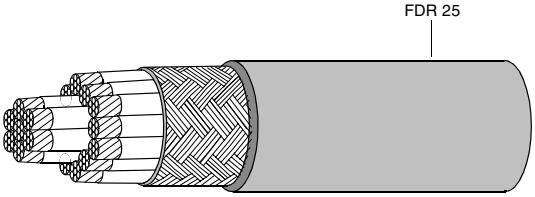

Available in:	
Americas	■
Europe	■
Asia Pacific	■

Catalog 1654025
Revised 3-13

www.te.com

Dimensions are shown for reference purposes only. Specifications subject to change.

Dimensions are in millimeters unless otherwise specified.

USA: +1 800 522 6752
Asia Pacific: +86 0 400 820 6015
UK: +44 800 267 666

For additional support numbers please visit www.te.com

FDR25 (Continued)

Typical Characteristics when Tested in Accordance with TE Specification WCD 2002 (UK) and WCD 3304 (US)

Mechanical	Tensile strength (MPa) Elongation (%) Tear strength (N/mm) Abrasion resistance (1.6 kg load) Cold bend	20 500 5 40 scrapes min. -40°C [-40°F]	
Thermal aging	Endurance IEC 60216-1 Heat aging 120h, 175°C [347°F] Heat shock 4 h at 225°C [437°F]	2500 h 150°C [302°F] TS 8 MPa (min). Eb 150% (min) No cracks, drips or flowing, 6 mm total shrinkage in 300 mm	
Fluid resistance	24 h immersion	% Retention of properties Tensile strength	Elongation
	Diesel fuels 70°C [158°F]	70	70
	Hydraulic fluids 50°C [122°F]	70	70
	Lubricating oils 70°C [158°F]	70	80
	Cleaning fluids 23°C [73°F]	90	95
	Deicing fluids 23°C [73°F]	90	95
Electrical	Insulation resistance 20°C [68°F] M ohm.km min.	2	
Other	45° flammability	30 s (max) afterburn 100 mm (max) burn length	
	Vertical flammability	Self extinguishing	
	Acid gas	4% HCl equivalent (max.)	

Dimensions are shown for reference purposes only. Specifications subject to change.

Dimensions are in millimeters unless otherwise specified.

USA: +1 800 522 6752
Asia Pacific: +86 0 400 820 6015
UK: +44 800 267 666

For additional support numbers please visit www.te.com

Zerohal

Low Fire Hazard Performance Wire and Cable Jacket Material

Product Facts

- Halogen free
- Low smoke generation
- Highly flame retardant
- Low toxicity index
- Low corrosive gas emission
- Temperature rating -30°C to +105°C [-22°F to +221°F]

Available in:	
Americas	■
Europe	■
Asia Pacific	■

Applications

Cables rarely initiate fires, but they could be involved in them and can significantly increase the damage caused should they propagate the fire. Until recently the flame retarding of cables was achieved by the use of halogenated flame retardants which are effective fire suppressants, but which unfortunately produce dense smoke and corrosive acid gases when burned. These effects are highly undesirable in a fire, hindering evacuation and fire fighting, endangering life and causing corrosion damage to expensive and vital equipment.

Raychem Zerohal is a halogen-free cable jacket material developed by TE and approved to the most exacting requirements for low fire hazard cables in many countries and, as such, is the most widely accepted material for these applications in the marine, process and mass transport industries. Combined with SPEC 44 wire or Type 99 and 100 wire, this jacket material provides small size, light weight cables (approximately 40% weight saving over conventional materials).

Zerohal combines the good mechanical and electrical features of some conventional cables with good flame retardancy, low smoke generation, low evolution of hazardous and corrosive gases, and good resistance to diesel fuel, lubricating oils and water.

Zerohal jacket material is fully compatible with the low fire hazard harnessing system - System 100.

System

- System 100

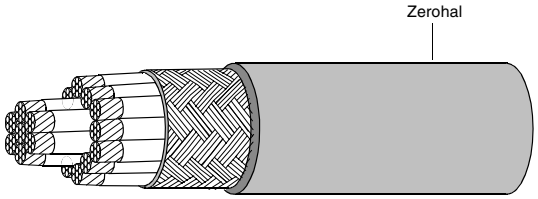

Catalog 1654025
Revised 3-13

www.te.com

Dimensions are shown for reference purposes only. Specifications subject to change.

Dimensions are in millimeters unless otherwise specified.

USA: +1 800 522 6752
Asia Pacific: +86 0 400 820 6015
UK: +44 800 267 666

For additional support numbers please visit www.te.com

Zerohal (Continued)

Typical Characteristics when Tested in Accordance with TE Specification WCD 2015 and WC 2001 (Zerohal with Fungicide)

Mechanical	Tensile strength (MPa) Elongation (%) Tear strength (N/mm) Abrasion resistance (1.6 kg load) Cold bend	9 200 5 30 scrapes min. -30°C [-22°F]	
Thermal aging	Heat aging 120 h 130°C [266°F]	60% min retention of TS and Eb	
	Heat shock 4 h at 225°C [437°F]	No cracks, drips or flowing, 6 mm total shrinkage in 300 mm	
Fluid resistance		Retention of properties	
		Tensile strength	Elongation
	Diesel fuels 20°C [68°F] /24 h	85	75
	IRM 902 24h, 100°C [212°F]	90	75
	Lubricating oils 50°C [122°F]/24 h	80	75
	Water uptake (ASTM D570) 70°C [158°F] /28 days	4% weight uptake (max)	
Electrical	Insulation resistance 20°C [68°F] M ohms km (min)	1	
Other	45° flammability	Self extinguishing	
	Vertical flammability (Swedish Chimney)	Self extinguishing	
	Acid gas	1.2% HCl equivalent (max)	
	Limiting oxygen index	32%	
	Temperature index	275°C [527°F]	
	Toxicity index	2.5 per 100 g	
	Smoke index	18	
	Halogen content	None detected	

Low Fire Hazard Performance

Flammability

Current thinking on fire hazard defines the term 'Fire Risk'. This description recognizes that the risk in a fire situation is influenced strongly from several factors including, ignitability, heat release, smoke evolution and toxic gas emission together with flammability.

There are several test procedures available used to assess flammability of wires and cables. Still in widespread use is Limiting Oxygen Index (LOI), but it is now generally recognized that because the test is conducted on a single specimen (of cable jacket or wire) in laboratory conditions, the results are, at best, only weakly correlated to actual fire situations. Critical Temperature Index (CTI), is a related test and assesses performance at elevated temperature but nevertheless it is still conducted on a single specimen. The most common flammability tests for a single wire specimen is the 60˚ flame test as defined by AS81044 and FAR Part 25.More recent evidence and thinking places significantly greater importance on large scale flammability tests, such as IEC IEEE 383 or UL1685, in which the sample consists of a tray of wires. These tests predict more accurately the likely behavior of cables in actual fire scenarios. Raychem Zerohal cable jackets give very good results in small scale laboratory based tests (e.g. LOI, CTI) and Zerohal cables perform very well in large scale tests (e.g. IEEE 383 or UL1685). Overall Zerohal jacketed cables have been shown to exhibit excellent flammability characteristics.

Corrosivity

Under fire conditions, polymers containing halogens, sulphur and phosphorous all form corrosive acid gases or liquids. These acids can then attack items such as printed circuit boards, connectors, control relays and metal structures, including steel reinforcement bars embedded in concrete.

Test methods to evaluate corrosivity involve direct measurement of the amount of acid gas produced during pyrolysis, eg to MIL-DTL-24640 Acid Gas Generation or measurement of pH and electrical conductivities of solutions.

Toxicity Index

The various gases given off by combustion of polymeric materials are toxic to differing degrees.

The Def Stan 02-713, assesses the concentration of each of the possible by-products and, by measuring the amounts of these materials, a Toxicity Index is assigned.

Zerohal jacket material has a typical Toxicity Index of 1.7, compared to a typical value of 6 for CSP and 20 for PVC jacketed cable. The Def. Standard 61-12 Part 31 specification requirement for a cable jacket is <5.

Smoke

The problems of classifying flammability and corrosive gas generation equally apply to measuring smoke generation. The method accepted by most authorities involves the use of the NBS smoke chamber where optical density of the chamber's atmosphere is constantly measured during pyrolysis.

The 10% visibility line indicates the density of smoke which would cause human disorientation and confusion. The rate of change of smoke density can be summarized to a single numerical value, as in Def. Standard 02-711, to give a smoke index for a material and thus offers simple comparison of materials performance.

Zerohal (Continued)

Navy Applications

37 Component Cable Comparison

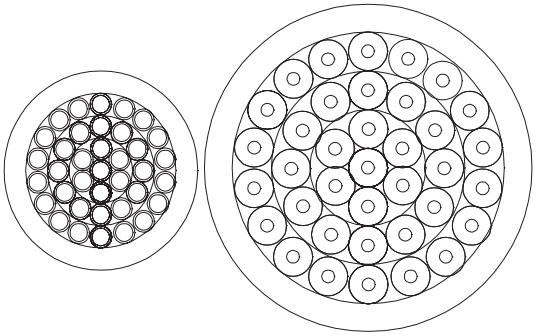

TE Competition

	TE Cable to Def Stan 61-12 Pt25	Cable to DGS 212
Diameter	12.5 mm (nom.)	21.3 mm
Weight	328 g/m (nom.)	526 g/m
Conductor	0.60 mm² (nom.)	0.5 mm²

Ships are becoming smaller and more sophisticated, with an ever increasing complexity of electronic systems, sensors and weapons. As technology advances shipbuilders are called upon to update and modify existing systems or fit completely new ones. The proliferation of electronic hardware requires more and more communication systems to transfer data from one place to another. To provide all the necessary interconnections, hundreds of multicore cables have to run throughout the ship. These, along with cables for power, lighting and other basic services, create a severe space problem within ducts and hangers.

For the vessel to achieve maximum speed, maneuverability and range, it is vital to keep the “top weight” to a minimum and since most of the equipment is located on the upper decks, system weight must be kept as low as possible.

The diagram shows a lightweight cable compared with a traditional shipboard cable having the same cross-sectional area of copper. Both cables have the same number of conductors. A saving in size has been made on the insulation material, but without sacrificing the mechanical or electrical characteristics of the cable. A typical saving in cable tray volume could be as high as 40%. Lightweight cables can also save in excess of twenty tons on a typical frigate and three to five tons on a fast patrol boat.

TE lightweight, small size cables are giving reliable service in frigates, corvette's, fast patrol boats, hydrofoils and submarines in many major Navies.

Due to recent improvements in manufacturing, TE can now offer an even tighter tolerance of ±2.5% on cable diameter. This is well within the limits imposed by specifications such as Def Stan 61-12 part 25, MIL-DTL-24640/24643, and offers significant benefits to system designers, particularly where cable glanding is involved.

Weight savings within “maxima allowed” by existing specifications are also achievable.

Other applications

The increasing awareness of many areas of industry of the need to minimize fire hazard risk is leading to a rapid growth in the use of Zerohal jacketed cables. Applications include rail and mass transit, offshore platforms and other enclosed areas where a fire would present a significant threat to people or equipment.

Catalog 1654025
Revised 3-13

www.te.com

Dimensions are shown for reference purposes only. Specifications subject to change.

Dimensions are in millimeters unless otherwise specified.

USA: +1 800 522 6752
Asia Pacific: +86 0 400 820 6015
UK: +44 800 267 666

For additional support numbers please visit www.te.com

Thermorad HTF/ Fluoroelastomer

High Temperature Performance Wire and Cable Jacket Material

Product Facts

- High temperature capability -20°C to +200°C [-4°F to 392°F]
- Excellent chemical resistance
- Flame retardant
- Continuous aircraft fuel immersion

Available in:	
Americas	■
Europe	■
Asia Pacific	■

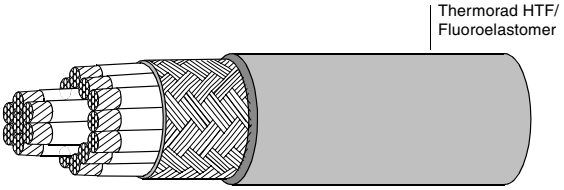

Applications

Thermorad HTF/ Fluoroelastomer is a material specially formulated for use in applications where exceptional performance is required.

It displays excellent stability during continuous high temperature exposure to adverse chemical environments.

Thermorad HTF/ Fluoroelastomer has a continuous operating temperature of up to 200°C [392°F], and finds applications in aircraft fuel tanks and on high performance engine cables. Thermorad HTF/ Fluoroelastomer cable jackets are compatible with the Raychem high temperature harnessing systems — System 200.

System

- System 200

Typical Characteristics when Tested in Accordance with TE Specification WSD 51/1637

Mechanical	Tensile strength Elongation Abrasion resistance (1.6 kg load) Cold bend -25°C ± 3°C [-13°F]	12 MPa 400% 40 scrapes min. No cracking	
Thermal aging	Heat age	168 h 250°C [482°F]	
	Heat shock 4 h at 300°C ± 3°C [572°F]	No cracks, drips or flowing, 6 mm total shrinkage in 300 mm	
Fluid resistance	24 h immersion	% Retention	
		Tensile strength	Elongation
	Diesel fuel 100°C [212°F]	60	60
	IRM902 oil 100°C [212°F]	60	60
Electrical	Insulation resistance 20°C [68°F] M ohms. km (min)	10	
Other	45° flammability	30 s (max) afterburn 100 mm (max) burn length	
	Vertical flammability	Self extinguishing	

Catalog 1654025
Revised 3-13

www.te.com

Dimensions are shown for reference purposes only. Specifications subject to change.

Dimensions are in millimeters unless otherwise specified.

USA: +1 800 522 6752
Asia Pacific: +86 0 400 820 6015
UK: +44 800 267 666

For additional support numbers please visit www.te.com

Thermorad/Thermorad F

General Purpose Wire and Cable Jacket Material

Product Facts

- Temperature rating -55°C to +125°C [-67°F to 257°F]
- Highly flame retardant
- Resistant to fuels, oils and greases
- UL approved

Available in:	
Americas	■
Europe	■
Asia Pacific	■

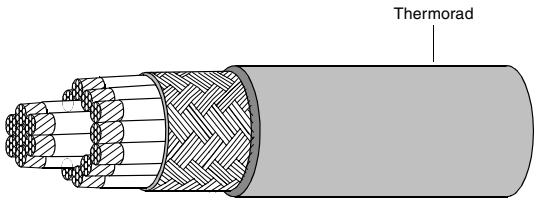

Applications

Thermorad is a general purpose jacket material which is unaffected by most common chemicals and solvents. Thermorad is highly flame retardant and has an overall balance of physical and chemical properties.

Thermorad cables find widespread use in industrial, commercial and military applications. This includes railways, commercial vehicles, medical equipment, communication equipment and commercial electronics. Thermorad cable jackets are compatible with Raychem polyolefin tubings, molded parts and adhesives.

Typical Characteristics when Tested in Accordance with TE Specification WCD 51/1602 (UK) and WCD 3310 (US)

Mechanical	Tensile strength Elongation Abrasion resistance (1.6 kg load) Cold bend	22 MPa 400% 300 scrapes min. -55°C [-67°F]	
Thermal aging	Heat aging 120 h, 170°C [338°F]	60% min. retention of TS and Eb	
	Heat shock 4 hours at 225°C [437°F]	No cracks, drips or flowing, 6 mm total shrinkage in 300 mm	
Fluid resistance	72 hour immersion, 50°C [122°F]	% Retention of properties	
		Tensile strength	Elongation
	IRM 902	60	60
	Skydrol®	60	60
Electrical	Insulation resistance 20°C [68°F] M ohms km (min)	20	
Other	45° flammability	30 s (max.) afterburn 75 mm (max.) burn length	
	Acid gas	4% HCl equivalent (max.)	

Catalog 1654025
Revised 3-13

www.te.com

Dimensions are shown for reference purposes only. Specifications subject to change.

Dimensions are in millimeters unless otherwise specified.

USA: +1 800 522 6752
Asia Pacific: +86 0 400 820 6015
UK: +44 800 267 666

For additional support numbers please visit www.te.com

Raythane, NT/Thermorad NTFR, Rayolin and AFR

Specialized Wire and Cable Jacket Material

Product Facts

Modified Polyurethanes Raythane C

- **-25°C to +80°C [-13°F to +176°F]**

and Raythane FR

- **-65°C to +90°C [-85°F to +194°F]**
- **Mechanically tough**
- **Can be overmolded**

Rayolin

- **-55°C to +95°C [-67°F to +203°F]**
- **XL or U-XL are available**
- **Excellent long term water immersion**
- **Can be overmolded**
- **Compatible with TE under-water cable splices**

NT (US designation Thermorad NTFR)

- **-55°C to +90°C [-67°F to +194°F]**
- **Extreme flexibility**
- **Highly flexible at low temperatures**

AFR

- **-40°C to +105°C [-40°F to +221°F]**
- **Abrasion resistant**
- **Fuel resistant**
- **Flame retardant**

Applications

In addition to the preferred cable jacket materials, TE offers a variety of Raychem cable jackets for specialized applications. For example, specialized materials are available for extreme low temperature flexibility or for enhanced abrasion resistance, or non-cross-linked materials for cable splicing or overmolding.

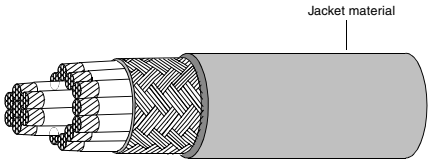

Available in:	
Americas	■
Europe	■
Asia Pacific	■

Typical Characteristics when Tested in Accordance with TE Specification WCD

		WCD51/1625 Raythane C	WCD3310 Raythane FR	WCD51/147/WCD3314 NT/Thermorad NTFR	WCD51/1601 Rayolin	WCD51/1619 AFR	SPEC 44/ ASC 15865 Thermorad K	SPEC 55 Thermorad HT
	Tensile strength (MPa)	40	28	17	19	11	20	34
Mechanical	Elongation (%)	500	500	300	250	150	400	100
	Abrasion resistance (1.6 kg load)	500 scrapes	500 scrapes	30 scrapes	300 scrapes	200 scrapes	Very good	Very good
	Cold bend	-25°C [-13°F]	-15°C [5°F]	-55°C [-67°F]	-55°C [-67°F]	-40°C [-40°F]	Pass	Pass
Thermal aging	Endurance (10000 h)	80°C [176°F]	90°C [194°F]	90°C [194°F]	95°C 203°F]	105°C [221°F]	N/A	N/A
Fluid resistance	24 h immersion Diesel fuels 50°C [122°F]	Excellent	Excellent	Good	—	Good	Excellent	Excellent
	Skydrol® 50°C [122°F]	—	—	Excellent	Excellent	Excellent	—	—
	Lubricating Oil 50˚C [122˚F'	—	—	—	—	—	Excellent	Excellent
	IRM 902 100°C [212°F]	Excellent	Excellent	Good	Good	Good	—	—
Electrical	Insulation resistance 20°C [68°F] M ohms. km (min)	1	1	5	100	100	—	—
Other	45° flammability	Pass	Pass	Pass	—	Pass	Pass	Pass

Catalog 1654025
Revised 3-13

www.te.com

Dimensions are shown for reference purposes only. Specifications subject to change.

Dimensions are in millimeters unless otherwise specified.

USA: +1 800 522 6752
Asia Pacific: +86 0 400 820 6015
UK: +44 800 267 666

For additional support numbers please visit www.te.com

NBC

Product Facts

- **Temperature rating: Thermorad 770: -55˚C to 150˚C Thermorad 780: -55˚C to 175˚C Thermorad 790: -65˚C to 200˚C**
- **Tested in live agent test with HD, VX and TGD for interior and exterior exposure**
- **Tested in accordance with Army TOP 8-2-510 for NBC comtamination survivability**
- **Tested to SC-X15111 and SC-X15112 fluid resistance requirements for commonly used military vehicle fluids**
- **Super Tropical Bleach (STB) and Decontamination Standard #2 (DS2), were used per TOP 8-2-511 to decontaminate specimens at interior (1 g/m^2) and exterior (10 g/m$_2$) exposure levels, respectively**

Applications

Thermorad 770/780/790 Jacket Material for applications requiring Nuclear Biological and Chemical contamination survivability (NBCCS).

Thermorad 770/780/790 is a revolutionary new fluroelastomer material that is resistant to nuclear, chemical, and biological threats. This material has undergone testing and show resistance to levels as listed above.

Thermorad 770/780/790 cables are ideal for military ground vehicle applications, communication equipment, and any other equipment that may be at risk of exposure while in theater.

They are ideal for use in NBC decontamination stations. Thermorad 770/780/790 jackets are compatible with TE Raychem brand tubing and molded parts.

System

System 700

Catalog 1654025
Revised 3-13

www.te.com

Dimensions are shown for reference purposes only. Specifications subject to change.

Dimensions are in millimeters unless otherwise specified.

USA: +1 800 522 6752
Asia Pacific: +86 0 400 820 6015
UK: +44 800 267 666

For additional support numbers please visit www.te.com

NBC (Continued)

Typical Characteristics when Tested in Accordance with:

		RT 770 Thermorad 770	RT 780 Thermorad 780	RT 790 Thermorad 790
Mechanical	Tensile strength (MPa) Elongation (%) Abrasion resistance Cold bend -55˚C [122˚F]	35 500 Very Good Pass	24 350 Very Good Pass	30 350 Very Good Pass
Thermal aging	Endurance 250˚C [482˚F] for 336 hrs.	Pass	Pass	Pass
Fluid resistance	24 h immersion			
	Diesel fuels 23°C [73°F]	Excellent	Excellent	Excellent
	Lubricating oils 50°C [122°F]	Excellent	Excellent	Excellent
	Decontaminating agent 23˚C [73˚F]	Excellent	Excellent	Excellent
	JP-8 23˚C [73˚F]	Excellent	Excellent	Excellent
Electrical	Volume Resistivity (ohms-cm)	21.50E+15	6.20E+15	1.20E+16
Other	45° flammability	Pass	Pass	Pass

Catalog 1654025
Revised 3-13

www.te.com

Dimensions are shown for reference purposes only. Specifications subject to change.

Dimensions are in millimeters unless otherwise specified.

USA: +1 800 522 6752
Asia Pacific: +86 0 400 820 6015
UK: +44 800 267 666

For additional support numbers please visit www.te.com

Electrical Shielding

Interference — Designing for the Threat

Available in:

Americas	■
Europe	■
Asia Pacific	■

Applications

In many applications, shielding of cables is important, whether it be to minimize cross-talk within the cable, to prevent interference from external sources, or to eliminate radiation from the cable itself.

The design of cables to provide effective shielding over a broad frequency spectrum is complex, and cables must be tailored to specific electromagnetic environments. From simple aluminized polyester film that provides electrostatic shielding to progressively more complex shielding that can be designed incorporating plated copper braids and Mu metal wraps.

Optimization

Performance of conventional braiding can be significantly improved by computer optimization. This tightly controlled process can give many times the shielding performance of a basic braided shield with minimal weight penalty or increase in optical coverage. Supershielded cables combine Mu metal wraps with optimized braids to provide even further enhanced performance, especially at low frequencies.

Available Shields

Shield type	Construction	Typical Application
Aluminized Polyester	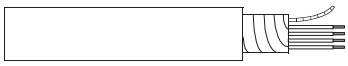	Electrostatic shielding
Single Braid	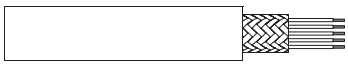	Low level EMI Low sensitivity
Single Optimized Braid	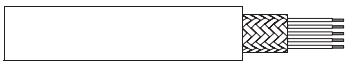	Sensitive lines High EMI
Double Optimized Braid	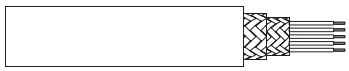	Highly sensitive lines Severe EMI
Supershielded	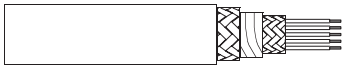	EMP/Tempest
Double Supershielded	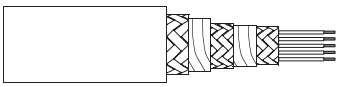	Severest of applications

Electrical Shielding (Continued)

Measuring Shielding Efficiency

Surface Transfer Impedance (Zt)

To assess the effectiveness of a shield, TE has adopted the line injection method as described in IEC 1196-1 to measure the surface transfer impedance (Zt) of a cable shield. This relates the open circuit voltage generated on a component wire inside the cable to the current injected on the overall shield. The unit of Zt is Ohms per meter, thus the voltage coupling is length dependent and long cables exhibit more leakage than similar but shorter length ones. To determine the surface transfer impedance across a range of frequencies, a drive signal is generated by the internal tracking generator of a spectrum analyzer, and amplified. The voltage is induced on the center conductor of the sample which is amplified and returned to the signal generator for measurement. The understanding of leakage mechanisms has enabled TE to design cables with guaranteed minimum Zt values for the desired operating environment.

Supershielding

EMP Hardened Cables

The requirements for nuclear hardened cables present the engineer with a range of problems. The waveform of the EMP is such that the majority of power is dissipated in a frequency band between 1 KHz and 5 MHz, where little protection is given by conventionally shielded cables. TE has solved this problem with a range of supershielded cables which give shielding performance at these frequencies by incorporating materials which change the inductance of the shield and lower the transfer impedance. TE supershielded cables have a sandwich construction of Mu metal tapes between optimized braids. Mu metal is a ferro-magnetic material which has a high permeability over a wide range of field strengths. It is applied to the cable in a way which maintains cable flexibility and minimizes work hardening and any consequent reduction in permeability. Supershielded cables not only give protection against EMP but also other major interference modes.

Shielded Cables

Controlling the Threat

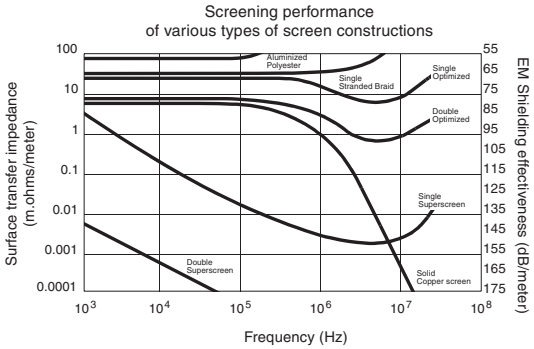

Testing

TE EMC test facilities have the capability for bulk current injection testing in addition to surface transfer impedance measurements. The installation is a proven facility in characterizing new design parameters.

Design and Manufacturing Expertise

The problems of shielding cables are complex. However, with the introduction of optimized braids and supershielded cables, TE has the capability to solve the most difficult shielding problems. Shielding of cables without degrading cable flexibility can be provided for coaxial and multiconductor cables for all EMC and EMP conditions. To complement this range of cables, TE manufactures Raychem cable terminations and connector back fittings to give total interconnection system shielding performance.

Dimensions are shown for reference purposes only. Specifications subject to change.

Dimensions are in millimeters unless otherwise specified.

USA: +1 800 522 6752
Asia Pacific: +86 0 400 820 6015
UK: +44 800 267 666

For additional support numbers please visit www.te.com

Power Cables

Product Facts

- Choice of jacket materials
- -65°C to +260°C [-85°F to +500°F]
- Size and weight savings
- Excellent flexibility
- Resistance to solvents and chemicals
- Corona resistance
- Increased flexibility in installation
- Arc-resistance of materials

Each power cable offers particular advantages for specific applications and is also available in multiconductor constructions and shielded and jacketed versions. Cables offer size and weight savings, good resistance to abrasion and cut-through, and the ability to operate in difficult environments.

Available in:	
Americas	■
Europe	■
Asia Pacific	■

Applications

TE offers a range of flexible Raychem power cables that are insulated and jacketed using materials that provide improved performance over other materials, such as CSP/EPR, silicone, or PCP/Butyl. Five different types of cable are available:

Type TR is a general purpose, single-wall, 125°C [257°F] construction normally specified for use inside cabinets in protected areas.

Type ZHI is a halogen-free 105°C [221°F] cable with good oil resistance. It is particularly suitable for use in offshore, ship, and mass transit applications where low-fire-hazard performance is required. Refer to TE specification WCD 2015.

Type AFR is a 105°C [221°F], single-extrusion, abrasion-resistant, flame- and fuel-resistant,radiation-crosslinked polyolefin.

Type FTR is a dual-wall, 125°C [257°F], diesel-oil-resistant cable originally developed for tank engine compartment applications. It meets the German BWB VG 95218 specification. Refer to TE specification WCD 2002. (US Alternative Type 10603)

Type ZHPCG is a halogen-free, 115°C [239°F] cable with good oil resistance and resistance to water. It is particularly suitable to the Mass Transit, Marine and Off-Shore industries where its low fire hazard performance and flexibility are key to a successful installation. Refer to TE Specification WSD 1265. (US Alternative Type 2HPC06XT and 2HPC20XT)

Type 80 Flexible Light Weight Aluminum Power Feeders are designed with a dual wall flexible ETFE (±175˚C) insulation based system to allow the cable to be bent and routed in extremely tight areas with no wrinkling or cracking of the insulation. The design has been tested to verify that it meets key aerospace industry requirements of flexibility, corona resistance and wrinkling in high voltage applications. TE also has the facilities to test corona resistance or production wire and cable at 400 Hz and various altitudes. (Contact TE for more information)

Type Superflex is a 260˚C rated fluoropolymer insulation based system. The need for a combination of high temperature and high performance in wire insulation has become a critical factor in today's platforms. This is especially true in large diameter power feeder applications where temperature and durability are key. TE new product line offering comes rated at 200˚C for 10 K hours. (Contact TE for more information)

Catalog 1654025
Revised 3-13

www.te.com

Dimensions are shown for reference purposes only. Specifications subject to change.

Dimensions are in millimeters unless otherwise specified.

USA: +1 800 522 6752
Asia Pacific: +86 0 400 820 6015
UK: +44 800 267 666

For additional support numbers please visit www.te.com

Power Cables (Continued)

Specifications/Approvals*

Series	Military	TE
TR	—	WCD 2003, WSD51/1602
ZHI	Def. Standard 61-12 Part 31 (jacket material)	WSD 2015
FTR	BWB VG 95218 Types G, H, and K	WSD 2002
AFR	—	WCD 2011, WSD51/1619
ZHPCG	—	WSD 1265
80	—	SPEC 80
Superflex	—	WCD 3111

*See specifications listed for details of performance.

Conductors (Tinned Soft Copper)

Conductor Size mm²	Stranding		Max. Resistance at 20°C in Ω/km (Ω/1000 ft) Class 5/6
	IEC Class 5	IEC Class 6	
	Nom. Dia.	Nom. Dia.	
1.5	1.49 [.05]	1.53 [.06]	13.20 [4.02]
2.5	1.90 [.07]	2.40 [.09]	7.82 [2.38]
4.0	2.49 [.10]	2.90 [.11]	4.85 [1.48]
6.0	3.00 [.12]	3.60 [.14]	3.23 [0.98]
10.0	4.60 [.18]	4.55 [.18]	1.88 [0.57]
16.0	5.70 [.22]	5.50 [.22]	1.19 [0.36]
25.0	7.10 [.28]	7.30 [.29]	0.78 [0.24]
35.0	8.50 [.33]	8.55 [.34]	0.55 [0.17]
50.0	10.30 [.41]	10.15 [.40]	0.39 [0.12]
70.0	12.40 [.49]	12.00 [.47]	0.27 [0.08]
95.0	14.50 [.57]	14.05 [.55]	0.20 [0.06]
120.0	16.00 [.63]	16.30 [.64]	0.15 [0.05]
150.0	18.00 [.71]	17.40 [.68]	0.13 [0.04]
185.0	20.00 [.79]	20.00 [.79]	0.10 [0.030]
240.0	23.00 [.91]	—	0.08 [0.024]
300.0	26.00 [1.0]	—	0.06 [0.018]
400.0	30.00 [1.2]	—	0.05 [0.015]

*For Type 80 and Superflex, contact TE for conductor details.

Materials Performance Summary

Material	Tensile Strength N/mm² typical	Abrasion Resistance	Cut Through	Temperature Rating °C 10000 h	Preferred Color
TR	20	Excellent	Good	125	Black
ZHI	9	Good	Very Good	105	Black
FTR	18	Good	Good	125	Black
AFR	18	Excellent	Very Good	105	Grey
ZHPCG	9	Good	Good	115	Black
80	-21	Very Good	Very Good	175	White
Supeflex	-14	Very Good	Very Good	260	White

Note: Where a higher operating temperature is required, TE SPEC 55 wire provides outstanding performance up to 200°C continuous operating temperature. For these or other special applications, please contact TE.

Dimensions are shown for reference purposes only. Specifications subject to change.

Dimensions are in millimeters unless otherwise specified.

USA: +1 800 522 6752
Asia Pacific: +86 0 400 820 6015
UK: +44 800 267 666

For additional support numbers please visit www.te.com

Power Cables (Continued)

Table 1. Nominal Diameters and Maximum Weights

Conductor Size (mm²)	TR 16			FTR 16		
	Part No.	Nom. OD in mm (in)	Max. weight in kg/km (lb/1000 ft)	Part No.	Nom. OD in mm (in)	Max. weight in kg/km (lb/1000 ft)
1.5	—	—	—	—	—	—
2.5	TR 16-2.5	3.9 [.15]	34.0 [22.8]	—	—	—
4.0	-4	4.5 [.17]	51.0 [34.2]	FTR 16-4	5.6 [.22]	72.0 [48.4]
6.0	-6	5.2 [.20]	73.0 [48.9]	-6	6.3 [.25]	95.0 [63.8]
10.0	-10	6.2 [.24]	117.0 [78.4]	-10	7.5 [.29]	151.0 [101.5]
16.0	-16	7.4 [.29]	182.0 [121.9]	-16	8.8 [.35]	228.0 [153.2]
25.0	-25	9.3 [.37]	274.0 [183.6]	-25	10.7 [.42]	335.0 [225.1]
35.0	-35	10.6 [.42]	383.0 [256.6]	-35	12.1 [.48]	463.0 [311.1]
50.0	-50	12.5 [.49]	542.0 [363.1]	-50	14.0 [.55]	631.0 [424.0]
70.0	-70	14.6 [.57]	765.0 [512.6]	-70	16.2 [.64]	878.0 [589.9]
95.0	-95	17.0 [.67]	1020.0 [683.4]	-95	18.8 [.74]	1170.0 [786.1]
120.0	—	—	—	-120	21.3 [.84]	1481.0 [995.1]

Table 2. Nominal Diameters and Maximum Weights

Conductor Size (mm²)	ZHI 15			AFR 35		
	Part No.	Nom. OD in mm (in)	Max. Weight in kg/km (lb/1000 ft)	Part No.	Nom. OD in mm (in)	Max. Weight in kg/km (lb/1000 ft)
1.5	ZHI 15 -1.5	4.09 [.16]	33.5 [22.4]	AFR 35-1.5	2.7 [.11]	21.6 [14.5]
2.5	-2.5	4.69 [.18]	48.8 [32.7]	-2.5	3.7 [.15]	38.6 [25.9]
4.0	-4	5.49 [.22]	72.1 [48.3]	-4	4.7 [.18]	61.1 [41.1]
6.0	-6	6.16 [.24]	99.8 [66.9]	-6	5.6 [.22]	90.1 [60.5]
10.0	-10	8.20 [.32]	159.0 [106.5]	-10	7.0 [.28]	153.5 [103.1]
16.0	-16	9.30 [.37]	223.0 [149.4]	-16	8.1 [.32]	211.2 [141.9]
25.0	-25	10.90 [.43]	331.0 [221.8]	-25	10.4 [.41]	336.1 [225.8]
35.0	-35	12.30 [.48]	448.0 [300.2]	-35	11.6 [.46]	455.4 [305.7]
50.0	-50	14.70 [.58]	631.0 [422.8]	-50	13.7 [.54]	638.3 [428.9]
70.0	-70	16.80 [.66]	852.0 [570.8]	-70	16.0 [.63]	834.9 [561.0]
95.0	-95	19.10 [.75]	1108.0 [742.4]	-95	18.3 [.72]	1148.0 [771.4]
120.0	-120	21.00 [.83]	1438.0 [963.5]	-120	20.4 [.80]	1501.9 [1009.1]
150.0	-150	23.00 [.91]	1748.0 [1171.2]	-150	22.6 [.89]	1834.0 [1233.0]
185.0	-185	25.60 [1.01]	2088.0 [1399.0]	-185	24.8 [.98]	2177.0 [1463.0]
240.0	-240	28.60 [1.13]	2705.0 [1812.4]	-240	27.8 [1.10]	2817.0 [1892.0]
300.0	-300	32.00 [1.26]	3363.0 [2253.2]	-300	32.0 [1.20]	3579.0 [2405.0]
400.0	-400	36.40 [1.43]	4396.0 [2945.3]	-400	36.0 [1.40]	4636.0 [3115.0]

Table 3. Nominal Diameters and Maximum Weights

Conductor Size (mm²)	ZHPCG-15			ZHPCG-35		
	Part No.	Nom. OD in mm [in]	Max. Weight in kg/km [lb/1000 ft]	Part No.	Nom. OD in mm [in]	Max. Weight in kg/km [lb/1000 ft]
1	ZHPCG-15-1	3.77 [.14]	28.0 [18.1]	ZHPCG-35 -1	—	—
1.5	-1.5	3.79 [.15]	36.0 [24.2]	-1.5	4.55 [.18]	37.9 [25.5]
2.5	-2.5	4.27 [.17]	45.0 [30.2]	-2.5	5.07 [.20]	52.9 [35.5]
4.0	-4	4.64 [.18]	60.0 [40.3]	-4	5.66 [.22]	72.7 [48.9]
6.0	-6	5.31 [.21]	85.0 [57.1]	-6	6.15 [.24]	96.7 [65.0]
10.0	-10	6.53 [.26]	135.0 [90.7]	-10	7.33 [.29]	141.0 [94.7]
16.0	-16	8.03 [.32]	195.0 [131.0]	-16	8.83 [.35]	214.0 [143.8]
25.0	-25	9.70 [.38]	300.0 [201.6]	-25	10.50 [.41]	316.0 [212.3]
35.0	-35	11.30 [.44]	443.0 [297.7]	-35	11.70 [.46]	425.0 [285.6]
50.0	-50	13.50 [.53]	623.0 [418.6]	-50	13.48 [.53]	582.0 [391.0]
70.0	-70	15.60 [.61]	847.0 [569.1]	-70	15.33 [.60]	802.0 [538.9]
95.0	-95	18.10 [.71]	1119.0 [751.9]	-95	17.93 [.71]	1051.0 [706.2]
120.0	-120	19.80 [.78]	1445.0 [970.9]	-120	19.80 [.78]	1308.0 [878.8]
150.0	-150	22.00 [.87]	1775.0 [1192.7]	-150	21.44 [.84]	1601.0 [1075.7]
185.0	-185	24.40 [.96]	2115.0 [1421.2]	-184	23.28 [.92]	1966.0 [1321.0]
240.0	-240	27.80 [1.09]	2762.0 [1856.0]	-240	27.33 [1.08]	2542.0 [1708.0]
300.0	-300	31.20 [1.23]	3452.0 [2320.0]	-300	32.50 [1.28]	3568.0 [2397.3]
400.0	-400	35.20 [1.39]	4474.0 [3006.4]	-400	37.00 [1.46]	4652.0 [3125.7]

Dimensions are shown for reference purposes only. Specifications subject to change.

Dimensions are in millimeters unless otherwise specified.

USA: +1 800 522 6752
Asia Pacific: +86 0 400 820 6015
UK: +44 800 267 666

For additional support numbers please visit www.te.com

Power Cables (Continued)

Part Numbering System

XXX XX - XX - X

Standard Colors
0 = Black 8 = Gray

Conductor Cross Section
(1.5 to 400 mm2)

Conductor Type
5 = IEC Class 5 - Flexible 6 = IEC Class 6 - Very flexible

Voltage Rating
1 = 600/1000 V
3 = 1900/3300 V

Insulating Type
TR
FTR
ZHI
AFR
ZHPCG

*For Type 80 and Superflex, contact TE for conductor details.

Part Numbering System is a cross reference only and not meant for part creation.

Dimensions are shown for reference purposes only. Specifications subject to change.

Dimensions are in millimeters unless otherwise specified.

USA: +1 800 522 6752
Asia Pacific: +86 0 400 820 6015
UK: +44 800 267 666

For additional support numbers please visit www.te.com

Table of Contents

TE Connectivity application equipment is designed and engineered specifically for installation of Raychem brand heat-shrinkable products. These tools provide the optimal heating temperatures, performance, and control features for maximum production efficiency.

AA-400 Super Heater
Compressed-air heating tool 10-2
AD-1319-9
Holding fixture tool 10-3
AD-1377, AD-1522, AD-1381
Hand-operated crimp tools 10-4
AD-3050-SEAL-TEST-EQUIP
Seal test equipment Splice sealing and connector sealing evaluation - various products 10-5, 10-6
AD-5000 and RH-396X
Tinel-Lock installation tool Tinel-Lock screened termination products 10-7, 10-8
AD-5010-Tinel-Bench-230V
Tinel-Lock installation tool Tinel-Lock screened termination products 10-9, 10-10
CV-1981, CV-1983
Heavy-duty hot-air heating tools 10-11, 10-12
HL2010E/HL1910E
Steinel® general purpose hot-air heating tool 10-13, 10-14
IR-1891
Shuttle machine - twin workstation heater for multiple installation of short length tubing products 10-15, 10-16
IR-550 Mark II
Infrared heating tool 10-17
IR-1759 MiniRay
Infrared heating tool . . . . . 10-18 to 10-21
Model 16B
Belt heater 10-22, 10-23
Model 19
Conveyor heater for processing Raychem brand heat-shrinkable tubing and terminating devices 10-24, 10-25
Model 81CE
Discrete heater 10-26, 10-27
Model 105
Tunnel oven 10-28, 10-29
RBK-ILS-Processor MkII
Installation of splice sealing products adjacent to ultrasonic welder 10-30, 10-31
ThermoGun HG
Hot-air heating tool 10-32, 10-33

Note: Users should independently evaluate the suitability of the product for their application. Before ordering, check with TE for most current data.

Steinel is a trademark of Steinel GmbH.

Catalog 1654025
Revised 3-13

www.te.com

Dimensions are shown for reference purposes only. Specifications subject to change.

Dimensions are in millimeters unless otherwise specified.

USA: +1 800 522 6752
Asia Pacific: +86 0 400 820 6015
UK: +44 800 267 666

For additional support numbers please visit www.te.com

AA-400 Super Heater Compressed-Air Heating Tool

Product Facts

- **Automatic power cut-off switch to protect heating element if air flow is interrupted**
- **Pressure regulator and gauge for adjusting air flow and temperature**
- **Indicator light that goes on when power is applied to heating element**
- **Very focused heat**
- **Wide variety of reflectors available**
- **Excellent tool for small items and confined areas**

Applications

Used for installing heat-shrinkable tubing in multiple applications. Excellent for installing SolderSleeve devices (wire-to-pin applications) and SolderTacts contacts.

Specifications

Utility Requirements	
Electrical	120-V model: 120 Vac, 4 A, 50–60 Hz 240-V model: 240 Vac, 2 A, 50–60 Hz
Air (oil free)	60 psig minimum, 5 cfm

Ordering Information

Model	Voltage	Description	Part No.
AA-400 Super Heater with stand, needlepoint tip,	120 Vac	AA-400-32-Mk3 (110V)	582602-000
Mini SolderSleeve reflector, and input air filter	240 Vac (CE version)	AA-400-200-CE-SUPERHTR	281917-000

Accessories and Replacement Parts*	Part No.	Description	NSN Stock No.
SolderSleeve reflector	979646-000	AA-400-94-SLD-SLV-TIP-KIT	4940-00-609-4993
Needlepoint tip	979647-000	AA-400-96	4940-00-148-9847
Boot and tubing tip	979691-000	AA-400-101	4940-00-148-9848
Mini SolderSleeve reflector	979663-000	AA-400-102	4940-01-043-7634
Low-flow tip	979672-000	AA-400-103	3439-01-173-8810
Heating Element replacement kit, 120 V	013750-000	AA-400-128	—
Heating Element replacement kit, 240 V (CE)	444179-000	AA-400-228-EL-KT-240V-CE	—
Stand	979649-000	AA-400-09	—
Input air filter	979673-000	AA-400-P-Y-92-Filter	—
Air hose replacement kit	156553-000	AA-400-136	—
Gun and air hose replacement kit	238231-000	AA-400-229-Gun-Hse-Kit	—

*Controller is not sold separately.

Non CE Approved.
Cannot be sold in Europe.

Available in:	Americas	Europe	Asia Pacific
	■		■

Catalog 1654025
Revised 3-13

www.te.com

Dimensions are shown for reference purposes only. Specifications subject to change.

Dimensions are in millimeters unless otherwise specified.

USA: +1 800 522 6752
Asia Pacific: +86 0 400 820 6015
UK: +44 800 267 666

For additional support numbers please visit www.te.com

Holding Fixture Tool AD-1319-9

Product Facts

- **AD-1319-9 comes with two lateral wire clamps as standard**
- **Secures wire or cable, enabling easy installation of products**

Applications

Simplifies and speeds installation of Raychem brand SolderSleeve terminators or splices and SolderTacts shielded contacts.

Specifications and Dimensions

Dimensions	18 cm [7.07 in] W x 15 cm [5.91 in] L
Weight	300 g [.67 lb]

Product Range Covered	
SolderSleeve splices	MiniSeal, CWT-9XXX, D-1744, D-110
Shield terminators	D-100-XX
SolderTacts contacts	D-602-XX

Ordering Information

Model	Description	Part No.
Holding fixture	AD-1319-9	993850-000
38999 size 8 SolderTacts adapter	AT-1319-22	395241-000
38999 size 16 SolderTacts adapter	AT-1319-78	413186-000
Submin SolderTacts adapter	AT-1319-12	993872-000
748 SolderTacts adapter	AT-1319-14	993877-000
723 SolderTacts adapter	AT-1319-19	993938-000
482 size 16 SolderTacts adapter	AT-1319-17	993917-000

Note: Additional tooling for SolderTacts can be found under SolderTacts contacts, see section 8.

Available in:	Americas	Europe	Asia Pacific
	■	■	■

Catalog 1654025
Revised 3-13

www.te.com

Dimensions are shown for reference purposes only. Specifications subject to change.

Dimensions are in millimeters unless otherwise specified.

USA: +1 800 522 6752
Asia Pacific: +86 0 400 820 6015
UK: +44 800 267 666

For additional support numbers please visit www.te.com

Hand-Operated Crimp Tools AD-1377, AD-1522, AD-1381

AD-1377, AD-1522, AD1381

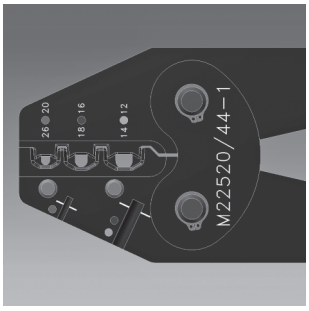

AD-1377 Crimp Tool

The AD-1377 crimp tool fits all MiniSeal crimp barrels. It also meets MIL specification M22520/37-01. A calibration verification gauge, AD-1386, is also available for the AD-1377. The gauge meets MIL specification M22520/39-01.

AD-1522 Crimp Tool

The AD-1522 crimp tool crimps all DuraSeal crimp and PolyCrimp products. It has a preset crimp depth that provides the optimum combination of tensile strength and insulation integrity in the finished splice.

AD-1381 Crimp Tool

The AD-1381 crimp tool is used in conjunction with our cold applied gel filled crimp splices. The AD-1381 is currently under qualification per M22520/44-01. A calibration verification gauge AD-1382 is also available for the AD-1381. The gauge is currently under qualification per M22520/39-03.

AD-1381 crimp tool **must be** used for proper installation of the Cold Applied Crimp Devices.

Ordering Information

Model	Description	Part No.
AD-1377 MiniSeal crimp tool	AD-1377-CRIMP-TOOL	992008-000
AD-1386 Calibration gauge	AD-1386-CALIBRATION-GAUGE	992013-000
AD-1522 DuraSeal crimp tool	AD-1522-1-CRIMPING TOOL	047011-000
AD-1381 Crimp tool	AD-1381-CRIMP-TOOL-3-CVTY	CS1660-000

Available in:	Americas	Europe	Asia Pacific
	■	■	■

Catalog 1654025
Revised 3-13

www.te.com

Dimensions are shown for reference purposes only. Specifications subject to change.

Dimensions are in millimeters unless otherwise specified.

USA: +1 800 522 6752
Asia Pacific: +86 0 400 820 6015
UK: +44 800 267 666

For additional support numbers please visit www.te.com

AD-3050-SEAL-TEST-EQUIP

Seal Test Equipment Splice Sealing and Connector Sealing Evaluation – Various Products

Product Facts

- **Simple fixture design allows fast sealing test result assisting determination of installation conditions for splice sealing products**
- **Connector fixture adapter allows connector sealing verification**
- **Strong portable container allows use in various locations**

Applications

The AD-3050-SEAL-TEST-EQ-NC is a manually operated pneumatic device, intended for use as a convenient 'in-process' sampling technique for checking sealed splices. Different combinations of in-line or stub splices can be pressure tested in any of the combination of fixtures (8 in total). There is also a facility to allow leak testing of various connectors.

TE UK has seen good correlation between results obtained with the AD-3050 and those obtained through water immersion testing. However testing in accordance with the OEM specification is the only guaranteed way of confirming that the OEM spec is being met. The splice products are located in clamps which deliver the test pressure. The product is immersed in water and pressure is delivered down the wire(s) to the sealed area.The test result is determined visually by looking for bubbles in the area of the sealing product.

Use of this equipment is described in TE UK procedure, reference No. PIP/017/95. This equipment can also check for poke through i.e. where individual wire strands poke through the installed heat-shrinkable sleeve by using the AD-3050-SEAL-POKE-IND. Poke through is eliminated by ensuring correct welding and subsequent handling conditions.

Available in:	Americas	Europe	Asia Pacific
	■	■	■

Catalog 1654025
Revised 3-13

www.te.com

Dimensions are shown for reference purposes only. Specifications subject to change.

Dimensions are in millimeters unless otherwise specified.

USA: +1 800 522 6752
Asia Pacific: +86 0 400 820 6015
UK: +44 800 267 666

For additional support numbers please visit www.te.com

AD-3050-SEAL-TEST-EQUIP (Continued)

Seal Test Equipment Splice Sealing and Connector Sealing Evaluation – Various Products
(Continued)

Technical Specification

Pneumatic Supply	6 bar maximum, filtered supply. 2 bar test pressure maximum. (Test pressure typically 0.5 bar)
Machine Cycle Times for seal testing:	Typically 1 minute
Total System Noise:	Negligible noise from air test
Dimensions:	550 x 350 x 215 [22 x 14 x 8 in] (Excludes packing case)
Weight:	4 Kg (8.80 lb) (Excludes packing case)
	9.6 Kg (21.20 lb) (Includes packing case)

Ordering Information

	Description	Part No.
Seal Test Equipment	AD-3050-SEAL-TEST-EQ-NC	C82893-000

Accessories

	Description	Part No.
Tool Case	AD-3050-SEAL-TEST-CASE-ONLY	F66989-000
Splice Poke-through Indicator	AD-3050-SEAL-POKE-IND	E63259-000

Recommended Spares

	Description	Part No.
Set of 8 Seals**	AD-3050-SEAL-8-KIT	299155-000
Clamp assembly including seals	AD-3050-SEAL-CLAMP-ASSY	168927-000
Sealing tape	EPDM foam, 6 mm x 9 mm, with acrylic adhesive backing.	—

** Full set of seals

Catalog 1654025
Revised 3-13

www.te.com

Dimensions are shown for reference purposes only. Specifications subject to change.

Dimensions are in millimeters unless otherwise specified.

USA: +1 800 522 6752
Asia Pacific: +86 0 400 820 6015
UK: +44 800 267 666

For additional support numbers please visit www.te.com

AD-5000 and RH-396X Tinel-Lock Installation Tool
Tinel-Lock Screened Termination Products

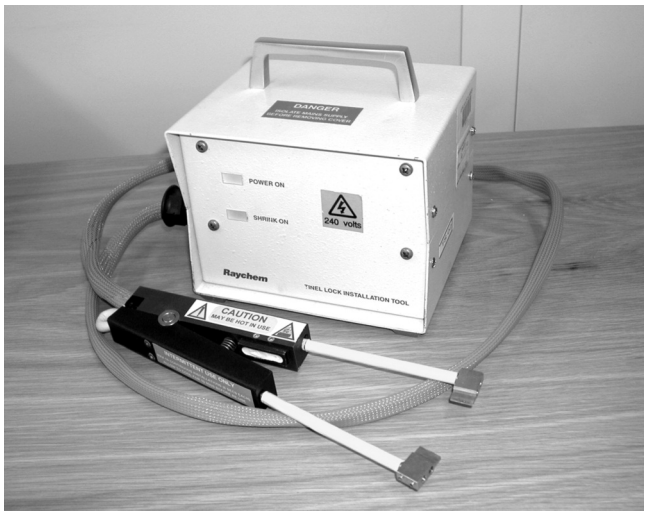

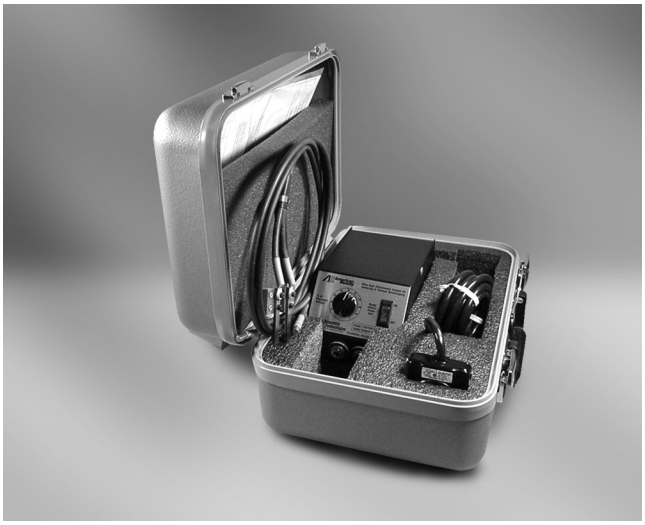

Applications

The AD-5000-TINEL-ASSY is a manually operated resistance heating tool designed specifically to install Tinel-Lock ring screened terminations in small batches. Recommended maximum continuous batch is 15, 6 second installations. The standard tool accommodates Tinel Rings from size TR04 to TR24 inclusive.

Various electrode (jaws) types can be used to install other Tinel-Lock ring sizes and types. The operator uses the hand-held tool to install the Tinel-Lock ring in its correct position on screened terminations. The Tinel-Lock ring has two patches of thermochromic paint on the Tinel-Lock ring.

The operator positions the Tinel-Lock ring on the terminations, with at least one of the patches of thermochromic paint visible. The Tinel-Lock ring is then clamped in the jaws to start the installation. Installation is complete when the thermochromic paint turns black.

AD-5000 available in:	Americas	Europe	Asia Pacific
	■	■	■

RH-396X available in:	Americas	Europe	Asia Pacific
	■		■

Catalog 1654025
Revised 3-13

www.te.com

Dimensions are shown for reference purposes only. Specifications subject to change.

Dimensions are in millimeters unless otherwise specified.

USA: +1 800 522 6752
Asia Pacific: +86 0 400 820 6015
UK: +44 800 267 666

For additional support numbers please visit www.te.com

AD-5000 and RH-396X Tinel-Lock Installation Tool
Tinel-Lock Screened Termination Products (Continued)

Technical Specification

Electrical Supply	220V-240V-50Hz
Machine Cycle Times for Tinel-Lock rings used on typical range of harnesses:	5 to 15 Seconds depending on ring size and braid type on the termination.
Mains Fuse	240 V 2 Amp (Type T anti - surge)
Total System Noise	Silent Operation
Dimensions	340 x 320 x 170 mm [13.4 x 13 x 6.7 in]
Weight	4.2 Kg

Product Range

	Tinel-Lock Rings
STANDARD ELECTRODES FITTED :	Sizes TRO4 to TR24
Conduit Electrodes Fitted	Conduit systems / TR rings on double braid
Square Profile Electrodes Fitted	TC02-TC03 RINGS

Ordering Information

	Description	Part No.
Tinel installation tool (220V-240V)	AD-5000-TINEL-ASSY	411993-000
Also available in the US and Asia Pacific: Resistance heating tool: 915088-01. Use with American Beauty Transformer - #105-A12 (110V) or #105-A12-220V (220V) and foot switch #10519		
Tinel installation tool (120 VAC)	RH-3960-1-TINEL-KIT-120V	173643-000
Tinel installation tool (220 VAC)	RH-3965-1-TINEL-KIT-220V	859855-000

Recommended Spares — AD-5000

Hand Tool Assembly	AD-5000-TINEL-HAND-TOOL	795257-000
Standard Electrodes (TR04 to TR24 RINGS)	AD-5000-TINEL-STD-ELECT	180245-000
Conduit Electrodes (Conduit systems or TR rings on double braid)	AD-5000-TINEL-COND-ELECT	747235-000
Square Profile Electrodes (TC02-TC03 RINGS)	AD-5000-TINEL-SQ-EXT-ELEC	065583-000

Recommended Spares — RH-396X

Hand Tool Assembly	915088-01-TINI-RING-HEATR	170224-000
Foot Switch	IR-500-P-FOOT-SWITCH	993702-000
120 VAC Transformer	AES-RH3960-TRNSFMR-120V	9951119-000
220 VAC Transformer	TRNSFMR-220V-105-A12-250W	574557-000

N.B. Electrodes are two per P.C.N.

Dimensions are shown for reference purposes only. Specifications subject to change.

Dimensions are in millimeters unless otherwise specified.

USA: +1 800 522 6752
Asia Pacific: +86 0 400 820 6015
UK: +44 800 267 666

For additional support numbers please visit www.te.com

AD-5010-Tinel Bench-230V Tinel-Lock Installation Tool
Tinel-Lock Screened Termination Products

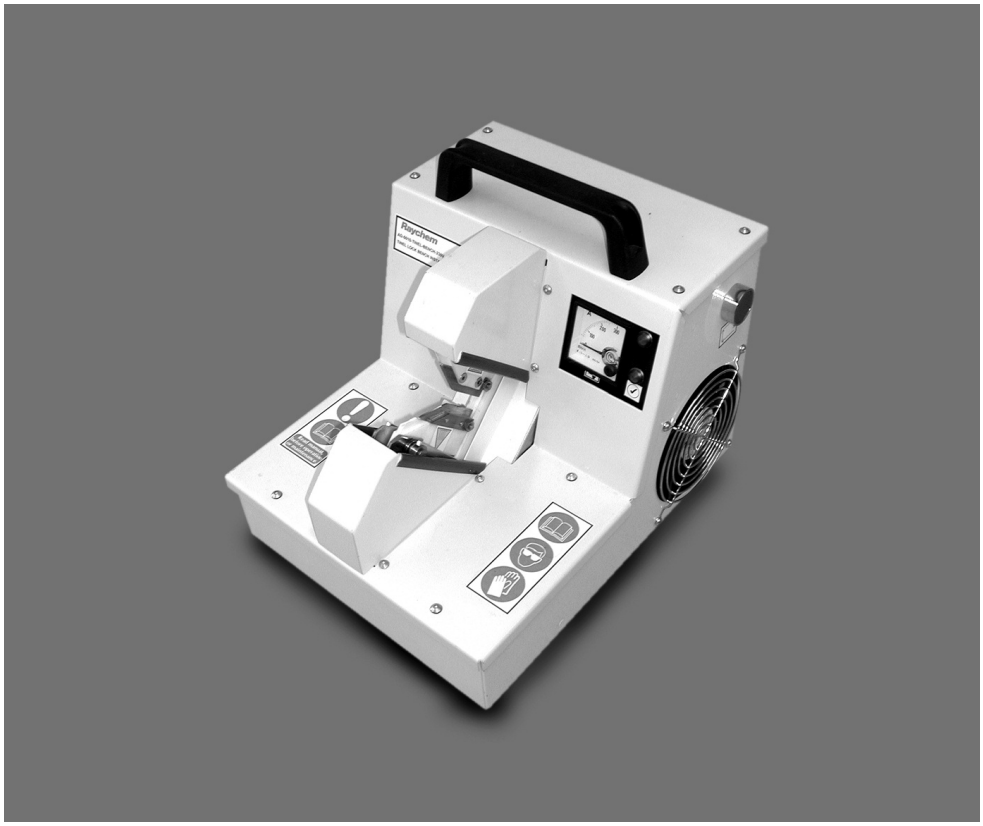

Applications

The AD-5010-TINEL-BENCH-230V is a manually operated resistance heating tool designed specifically to install Tinel-Lock ring screened terminations in large batches, in continuous operation. The tool accommodates Tinel Rings from size TR04 to TR24 inclusive. Various electrode (jaws) types can be used to install other Tinel-Lock ring sizes and types.

The operator uses the tool to install the Tinel-Lock ring in its correct position on screened terminations. The Tinel-Lock ring has two patches of thermochromic paint to ensure consistent installation.

The operator positions the Tinel-Lock ring on the termination, with at least one of the patches of thermochromic paint visible, and operates the push-button (or footswitch if fitted).

The Tinel-Lock ring is then located in spring-loaded jaws (it is not necessary to clamp the ring manually). The push button or footswitch (if fitted) is then operated to start the cycle, the cable is held in position for the duration of the installation. This is complete when the thermochromic paint turns black. This normally takes between 3 to 12 seconds, depending on ring size, braid type etc. An ammeter on the front panel shows installation current used. A needle file is provided for periodic cleaning of the electrodes.

Available in:	Americas	Europe	Asia Pacific
	■	■	■

Dimensions are shown for reference purposes only. Specifications subject to change.

Dimensions are in millimeters unless otherwise specified.

USA: +1 800 522 6752
Asia Pacific: +86 0 400 820 6015
UK: +44 800 267 666

For additional support numbers please visit www.te.com

AD-5010-Tinel Bench-230V Tinel-Lock Installation Tool
Tinel-Lock Screened Termination Products (Continued)

Technical Specification

Electrical Supply	230 V 50 Hz
Machine Cycle Times for Tinel-Lock rings used on typical range of harnesses:	3 to 12 Seconds depending on ring size and braid type on the termination.
Mains Fuses (2)	240 V 2 Amp (Type T anti - surge)
Total System Noise	Silent Operation
Dimensions	245 x 305 x 290 mm [10 x 12 x 11 in]
Weight	24 Kg

Product Range

	Tinel-Lock rings
STANDARD ELECTRODES FITTED :	Sizes TRO4 to TR24, conduit systems and TR rings on double braid
Square Profile Electrodes Fitted	TC02-TC03 RINGS

Accessories

	Description	Part No.
Footswitch Kit	AD-5010-BENCH-FOOTSW-KIT	072845-000

Recommended Spares

	Description	Part No.
Standard Electrodes (TR04-TR24 RINGS)	AD-5010-BENCH-STD-ELECT	222899-000
Square Profile Electrodes (TC02-TC03 RINGS)	AD-5010-BENCH-SQ-ELECT	727799-000
Mechanism Assembly (Including electrode set)	AD-5010-BENCH-MECH	924079-000

N.B Electrodes are two per P.C.N.

Ordering Information

	Description	Part No.
Tinel installation tool	AD-5000-TINEL-ASSY	411993-000

Catalog 1654025
Revised 3-13

www.te.com

Dimensions are shown for reference purposes only. Specifications subject to change.

Dimensions are in millimeters unless otherwise specified.

USA: +1 800 522 6752
Asia Pacific: +86 0 400 820 6015
UK: +44 800 267 666

For additional support numbers please visit www.te.com

CV-1981 and CV-1983 Heavy-Duty Hot-Air Heating Tools

Product Facts

- **Robust, double-insulated, heavy-duty unit**
- **Highest-wattage unit (1600–2260 watts)**
- **Integral stand that allows use as bench tool**
- **Safe, quiet operation**
- **Precisely variable temperature**
- **Variety of reflectors available**
- **Easy fixturing for dual opposing heating**

Applications

Used for installing dual wall or single wall tubing up to three inches in diameter and for installing SolderSleeve devices. Closed loop version (PID) also available.

Technical Specification

Electrical Supply	
CV-1981-MK2	120 V and 230 V
CV-1983	120 V and 230 V
CV-1981 PID	120 V and 230 V
Power Consumption	
CV-1981-MK2	1600 W
CV-1983	2260 W/3060 W
CV-1981 PID	1600 W
Total System Noise	
CV-1981-MK2	65dB
CV-1983	65dB
CV-1981 PID	>70dB
Length	
CV-1981-MK2	340 [13]
CV-1983	320 [13]
CV-1981 PID	350 [13]
Weight	
CV-1981-MK2	1.3 Kg [2.90 lb]
CV-1983	1.5 Kg [3.30 lb]
CV-1981 PID	1.4 Kg [3.10 lb]
Air Flow	
CV-1981-MK2	Max 230 l/min
CV-1983	Max 500 l/min
CV-1981 PID	230 l/min

Product Range
All dual wall, single wall and molded part products.
Various devices products.
For other products , contact TE.

Available in:	Americas	Europe	Asia Pacific
	■	■	■

Catalog 1654025
Revised 3-13

www.te.com

Dimensions are shown for reference purposes only. Specifications subject to change.

Dimensions are in millimeters unless otherwise specified.

USA: +1 800 522 6752
Asia Pacific: +86 0 400 820 6015
UK: +44 800 267 666

For additional support numbers please visit www.te.com

CV-1981 and CV-1983 Heavy-Duty Hot-Air Heating Tools (Continued)

Ordering Information

Equipment	Description	Part No.	Voltage	Hz
CV-1981-MK2	CV-1981-120V1600W-CANMK2	A42716-000	120V	50/60 Hz
	CV-1981-120V1600W-UKMK2	E95798-000	120V	50/60 Hz
	CV-1981-230V1600WMK2	813914-000	230V	50/60 Hz
	CV-1981-230V1600W-SEVMK2	F25836-000	230V	50/60 Hz
	CV-1981-230V1600-UKMK2	340970-000	230V	50/60 Hz
CV-1983	CV-1983-110V-2260W-UK	441753-000	120V	50/60 Hz
	CV-1983-220V-2260W	773898-000	230V	50/60 Hz
	CV-1983-220V-2260W-UK	985426-000	230V	50/60 Hz
	CV-1983-220V-3060W	538361-000	230V	50/60 Hz
	CV-1983-220V-3060W-UK	231866-000	230V	50/60 Hz
CV-1981-PID	CV-1981-120V-1600W-CANPIDF	839218-000	120V	50/60 Hz
	CV-1981-120V-1600W-UKPID	928826-000	120V	50/60 Hz
	CV-1981-230V-1600WPID	958770-000	230V	50/60 Hz
	CV-1981-230V-1600W-SEVPIDF	434366-000	230V	50/60 Hz
	CV-1981-230V-1600W-UKPIDF	385828-000	230V	50/60 Hz
CV-1983 Barrel Adapter	AD-1962	989172-000	—	—

Accessories

	Application	Part No.
PR-12 reflector	Tubing: 6.3–25.4 mm [0.25–1 in]	991973-000
PR-13 reflector	Tubing: Up to 6 mm [0.25 in]	991963-000
PR-13C reflector	Large SolderSleeve products	991974-000
PR-21 reflector	Tubing: Up to 25.4 mm [1 in]	991984-000
PR-24 reflector	Tubing/molded parts: 25.4–34.93 mm [1–1.38 in]	991964-000
PR-24A reflector	Tubing/molded parts: 34.93–60.33 mm [1.38–2.38 in]	991989-000
PR-25 reflector	SolderSleeve products: Up to 7 mm [0.28 in]	991965-000
PR-25D reflector	SolderSleeve products: 6.3–12.7 mm [0.25–0.50 in]	989523-000
PR-26 reflector	Small SolderSleeve products	991967-000
PR-33 reflector	SolderSleeve products: 19.05–25.4 mm [0.75–1 in]	997768-000
AD-1962 adapter for larger-barrel CV-1983	—	989172-000
PR-34 reflector	SolderSleeve products: 12.0–20.0 mm [0.47–0.79 in]	989111-000
PR-51	Special narrow reflector for molded part transitions (21.5 x 3.5 mm nozzle) [.85 x .14 in]	113069-000

*Note: A42716 supersedes and replaces 538005
340970 supersedes and replaces 923002

Catalog 1654025
Revised 3-13

www.te.com

Dimensions are shown for reference purposes only. Specifications subject to change.

Dimensions are in millimeters unless otherwise specified.

USA: +1 800 522 6752
Asia Pacific: +86 0 400 820 6015
UK: +44 800 267 666

For additional support numbers please visit www.te.com

HL1910E and HL2010E Steinel® General Purpose Hot-Air Heating Tool

Products Facts

- **Light weight**
- **Easy, quiet operation**
- **Precise variable temperature**
- **1500 watts**
- **Reflectors and stand (optional)**
- **Wide variety of applications**
- **CE approved (230 V only)**

Applications

Used for installing heat-shrinkable tubings and molded parts, SolderSleeve devices, and SolderTacts contacts.

Specifications

Steinel® (120 V) power requirement	120 V, 60 Hz, 12.5 A
Steinel® (230 V) power requirement	230 V, 50 Hz, 8.7 A
Rated heater element power	110V - 2000 W/230V-2000W
Weight	920 g [2.0 lb]
Cord length	Approx. 3 m [approx. 8 ft]
Typical temperature output*	49°C to 593°C [120°F to 1100°F]

*The Steinel® heating tool is equipped with a variable temperature control. The correct temperature setting of the tool will vary, depending on application characteristics. The recommended procedure is to experiment with scrap materials and start with the lowest temperature range.

Steinel is a trademark of Steinel GmbH.

Available in:	Americas	Europe	Asia Pacific
	■	■	■

Catalog 1654025
Revised 3-13

www.te.com

Dimensions are shown for reference purposes only. Specifications subject to change.

Dimensions are in millimeters unless otherwise specified.

USA: +1 800 522 6752
Asia Pacific: +86 0 400 820 6015
UK: +44 800 267 666

For additional support numbers please visit www.te.com

HL1910EE and HL2010E Steinel® General Purpose Hot-Air Heating Tool (Continued)

Ordering Information

Model /Description	Part No.
HL1910E-KIT-120	CJ2086-000
HL2010E-KIT-120	CJ2087-000
HL1910E-230V-EURO	F30529-000
HL1910E-230V-UK	F11734-000
HL1910E-KIT-230V-EURO	A93538-000
HL2010E-230V-EURO	C99451-000
HL2010E-230V-UK	A22932-000
HL2010E-KIT-230V-EURO	A23120-000

Accessories and Replacement Parts	Description	Part No.
SolderSleeve reflector	HL1802E-074616	832011-000
HL1802E-ADAPT for use with PR reflectors***	HL1802E-ADAPT-PR	444817-000
Tubing reflector	HL1802E-070519	022611-000
Bench stand	HL2010E-BENCH-STD	CJ2085-000
9-mm-diameter reduction nozzle	HL1802E-070618	930321-000

**Complete with SolderSleeve reflector.
***Selection of PR reflectors can be found in CV-1981/CV-1983 section.

Accessories

Clip-on bench stand (P/N CJ2085-000) for heating tool. Must be ordered separately.

SolderSleeve reflector (P/N 832011-000) for SolderSleeve terminators, SolderTacts contacts, and small-diameter tubing. Comes standard with Steinel® heating tool.

Optional tubing reflector (P/N 022611-000) for larger tubing and molded parts. Must be ordered separately.

Steinel is a trademark of Steinel GmbH.

IR-1891 Shuttle Machine — Twin Workstation Heater for Multiple Installation of Short Length Tubing Products

Product Facts

- **Automatic cycle start once heater is manually positioned over product, which gives improved process control (recommended for adhesive lined heat-shrinkable tubing e.g. sealing applications)**
- **Automatic heating head retraction at end of cycle prevents damage to components**
- **Multiple product fixture assemblies give increased process rates**
- **Cooling fan above each fixture assembly maintains holding fixture at an acceptable temperature**

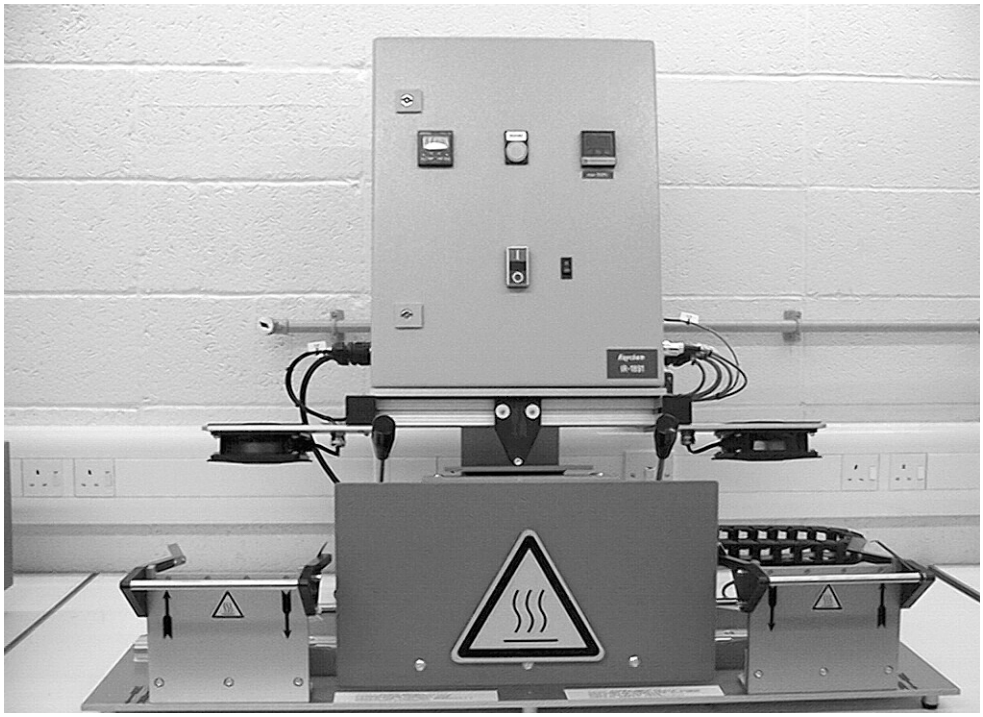

Applications

The IR-1891 is suitable for the installation of a range of Raychem brand heat-shrinkable tubing products onto a variety of small components, e.g. ring terminals, FASTON terminals and small connectors etc. The machine is provided with two work stations and a moveable heating head.

Each workstation is provided with supports for tooling fixtures (which must be specified and ordered separately). These support the workpieces and locate the tubing products. The operator loads the workpieces into the fixtures at one of the workstations, ensures that the tubing product is correctly positioned and then slides the heat head into position before initiating the heating cycle. The operator then continues with loading/unloading the other work station whilst the heating cycle is taking place.

The IR-1891-220V-Shuttle-Retn is provided with closed loop temperature control and in addition the heat head is 'locked' into position by use of an electromagnet during the heating cycle.

Once the other workstation has been loaded and the first installation is complete, the heat head is moved into position over the product and the next heating cycle initiated. Heating times vary typically from 3 to 30 seconds depending on the size and type of tubing product. Process rates up to 1200 pieces/hour can be achieved depending on the heating time and the time taken by the operator to load unload the workpieces. The installation temperature/power can be varied according to product type/size and required cycle times.

The heating elements, which are continuously energized, are of the infra-red medium wave length type and consist of a coiled resistance wire contained in quartz glass tubes. The closed loop temperature control uses similar elements but having integral thermocouple sensors.

Available in:	Americas	Europe	Asia Pacific
		■	

Catalog 1654025
Revised 3-13

www.te.com

Dimensions are shown for reference purposes only. Specifications subject to change.

Dimensions are in millimeters unless otherwise specified.

USA: +1 800 522 6752
Asia Pacific: +86 0 400 820 6015
UK: +44 800 267 666

For additional support numbers please visit www.te.com

IR-1891 Shuttle Machine — Twin Workstation Heater for Multiple Installation of Short Length Tubing Products (Continued)

Technical Specification

Electrical Supply	230 V Single Phase
Power Consumption	1600 W
Operating Temperature	650°C max
Process Rate	1200 / hour maximum depending on application and operator
Heating Times	3 to 20 seconds depending on application
System Noise	< 70 dB
Dimensions – 508636-000	L1100 x H650 x D500 mm [L43 x H25 x D20 in]
Dimensions – 613148-000 / 167309-000 / 289588-000	L1100 x H900 x D500 mm [L43 x H35 x D20 in]
Base Plate Dimensions 289588-000 / 167309-000	L1040 x D450 mm [L41 x D18 in]

Product Range

Wide range of TE tubing products in particular LSTT, RNF-3000, RNF-100, HTAT, ATUM.
Maximum diameter 20 mm [0.8 in] and maximum length 60 mm [2.0 in]

Ordering Information

Description	Part No.
* IR-1891-220VShttle-Retn	289588-000

***Note:** The descriptions given here DO NOT include the supply of the necessary tooling fixtures.These are designed for each individual application.

Accessories

	Description	Part No.
Grippers:		
IR-1891-SI-GRP-165-RD-1mm	Red Gripper with 1mm hole	629602-000
IR-1891-SI-GRP-165-CL-2mm	Clear Gripper with 2mm hole	112676-000
IR-1891-SI-GRP-165-BK-3mm	Black Gripper with 3mm hole	F83221-000
IR-1891-SI-GRP-165-WT-6mm	White Gripper with 6mm hole	554196-000

Note: A wider range of tooling grippers designed for previous applications are available. Please contact TE for details.

Dimensions are shown for reference purposes only. Specifications subject to change.

Dimensions are in millimeters unless otherwise specified.

USA: +1 800 522 6752
Asia Pacific: +86 0 400 820 6015
UK: +44 800 267 666

For additional support numbers please visit www.te.com

Infrared Heating Tool IR-550 Mark II

Product Facts

- **Lightweight, portable unit with pedestal base for benchtop operation**
- **Foot switch, so both hands can be free to hold parts**
- **Commercially available tungsten-halogen lamp**
- **Fan-cooled housing**
- **Instant on/off heat**
- **Viewing window that allows parts to be inspected during installation**
- **Quiet, focused IR operation**

Applications

Used for installing small and large SolderSleeve devices and SolderTacts contacts.

Specifications

Input power	105–120 V, 50–60 Hz, 4.5 A
Normal lamp life	More than 1000 hours of intermittent use
Weight	Approximately 2.5 Kg [5.5 lb]
Duty cycle	80%, 90-second max. heating times

Ordering Information

Model	Description	Part No.
IR-550 heating tool* (120 V) with RG-2 reflector, viewing window, and foot switch	IR-550-50-MARKII-HT-TOOL	994350-000
230V Tool CE Approved	IR-550-300-MARKIII-CE	C66438-000

Accessories and Replacement Parts

IR-550 foot switch (included with tool assembly 994350)	IR-550-216	994375-000
RG-6 reflector for large-diameter SolderSleeve terminations; aperture is 25.4 mm [1.0 in] wide	IR-550-19	994590-000
RG-11 reflector; aperture is 12.7 mm [.5 in] wide	IR-550-41	993695-000
RG-9 reflector; aperture is 9.525 mm [.375 in] wide	IR-550-39	993693-000
RG-2 reflector, included with 994350; aperture is 19.05 mm [.75 in] wide	IR-550-24	993770-000
Lamp (120 V)	IR-1000-P-N-13	993020-000
Optical filter	IR-550-237	118902-000
Viewing window (frame not included)	IR-550-238	007510-000
IR-550 upgrade kit: filter, viewing window, inner reflector, outer reflector	IR-550-240-Refurb	529600-000

Available in:	Americas	Europe	Asia Pacific
	■	■	■

Catalog 1654025
Revised 3-13

www.te.com

Dimensions are shown for reference purposes only. Specifications subject to change.

Dimensions are in millimeters unless otherwise specified.

USA: +1 800 522 6752
Asia Pacific: +86 0 400 820 6015
UK: +44 800 267 666

For additional support numbers please visit www.te.com

IR-1759 MiniRay Infrared Heating Tool

Product Facts

- **Small, lightweight, fan-cooled unit**
- **Small profile for installation where space is restricted**
- **Handheld operation**
- **Focused heat**
- **Quiet, efficient IR operation**
- **CE approved**
- **RoHS compliant**

Applications

Used for installing SolderSleeve devices and SolderTacts contacts.

* Control box not shown

The MiniRay tool is a hand held Infrared heating tool designed for installing shield terminators, splices and approved IR repair and tubing products.*

The tool is portable, lightweight and is convenient for use where work space is restricted. The hand tool is fan cooled and has low heat emission as the lamp is only energized on demand. A duty cycle up to 50% is permissible with a maximum heating time of 30 seconds.

Two versions of the hand tool are available:

- IR-1759-MK4/A Standard aperture recommended for products up to 6 mm diameter.
- IR-3104-MK4/A Large aperture for products up to 9 mm diameter.

Both versions of the tool will accept larger diameter components but uniform heating is then not assured.

The battery box controller is designed for remote areas, where more portability is required. This battery-powered controller can install approximately 50, 30 second installations before recharging is required. The ED-7-001-MK4-230V-50HZ and ED-7-002-MK4-110V-60HZ Control units provide controls for both power and time and are suitable where the use of pre-set installation conditions is required. Up to 20 memory locations are available for the storage of time/power values. A trigger switch is used to initiate each cycle. The controller can also be used in a manual mode with the operator controlling the duration of the heating cycle via the trigger switch.

The ED-7-CONT-230/110V-MK4 controller is a more simpler unit, with no variable time, or variable power memory functions, and maintains power to the lamp for as long as the trigger switch remains depressed. The tool can be used with either 230V or 110V (nominal) voltage supply.

The product being installed is visible during the heating cycle. An optical filter eliminates the unwanted UV emissions and excess visible light reducing the glare for the operator.

A product kit is available, see page 10-19 for ordering information.

*Contact your local TE representative for details.

[1] Approved by the U.S. Navy for use on fueled aircraft.

Available in:	Americas[1]	Europe	Asia Pacific
	■	■	■

Catalog 1654025
Revised 3-13

www.te.com

Dimensions are shown for reference purposes only. Specifications subject to change.

Dimensions are in millimeters unless otherwise specified.

USA: +1 800 522 6752
Asia Pacific: +86 0 400 820 6015
UK: +44 800 267 666

For additional support numbers please visit www.te.com

IR-1759 MiniRay Infrared Heating Tool (Continued)

Technical Specifications

IR-1759 / IR-3104 HAND TOOLS	
Supply Voltage	21.5 VAC nominal
Weight	1.1 kg
Typical Operating Temperature	500˚C
Typical Heating Time	15 seconds
Lamp Type, Power & Life - Typical values	250 W Tungsten Halogen average life 10,000 cycles @ 50% duty cycle
Noise	51 dB (A)
Power Cord Length	3.1 m

ED-7-CONT-230/110V-MK4 / ED-7-001-MK4-230V-50HZ / ED-7-002-MK4-110V-60HZ and ED-7-BATTBOX-MK4-230/110V

Supply Voltage:	
ED-7-001 & 002	230 VAC 50 Hz & 110 V 50/60 Hz
ED-7-CONT-230/110V-MK4	230 VAC 50 Hz or 110 V 50/60 Hz
ED-7-BATTBOX-MK4-230/110V	2 x 12V batteries
Input Current:	
ED-7-001 & 002	4 A & 10 A
ED-7-CON-230/110V-MK4	6.3 A
Dimensions WxHxL	160 x 120 x 250 mm
Weight:	
ED-7-001 & 002	6.2 kg
ED-7-CONT-230/110V-MK4	8.0 kg
ED-7-BATTBOX-MK4-230/110V	8.5 kg
Timer Adjustment (ED-7-001/002 only)	1-250 seconds
Output Voltage:	
ED-7-001 & 002	16-24 VAC (dependent on program)
ED-7-CONT-230/110V-MK4	21.5 VAC
ED-7-BATTBOX-MK4-230/110V	24V DC nominal
Voltage Output Control Accuracy (with ± 10% input variation):	
ED-7-001 & 002	± 3%
ED-7-CONT-230/110V-MK4	± 0.5V (120V/230V supply)
ED-7-BATTBOX-MK4-230/110V	N/A (dependent upon charge)
Lamp "Hold-On" Voltage:	
ED-7-001 & 002	3.5 VAC
ED-7-CONT-230/110V-MK4	N/A
ED-7-BATTBOX-MK4-230/110V	N/A
Memory Locations (ED-7-001&002 only)	20

Product Range

Shield Terminators	D-10X, SO63, SO96
For Other TE Products	Discuss with Product Management

Ordering Information

Description	Kit Part Number
IR heater, reflector to fit standard aperture, Standard V-block plus a Non-Timed Control Box 230V or 110V supply	**IR1759-MK4-AT3130-EDCONT**

Dimensions are shown for reference purposes only. Specifications subject to change.

Dimensions are in millimeters unless otherwise specified.

USA: +1 800 522 6752
Asia Pacific: +86 0 400 820 6015
UK: +44 800 267 666

For additional support numbers please visit www.te.com

IR-1759 MiniRay Infrared Heating Tool (Continued)

Parts, Accessories and Spare Parts List

Description	Part Number	Guideline	Comments
IR1759-Mk4/A /IR1759-Mk3/A	CF0025-000	Infra Red Heater Standard Aperture	RoHS compliant. Replaces 986899-000
IR1759-Mk4-At3130-EDCont	CF0024-000	Infra Red Heater, Reflector to fit standard aperture,	RoHS compliant. Replaces 898738-000/IR1759-Mk3-At3130- standard vee block, none timed control EDCont
IR3104-Mk4/A	CF5497-000	Infra Red Heater Large Aperture	RoHS compliant. Replaces 035343-000-000 / IR3104-Mk3/A
ACCESSORIES			
AT-3191	588701-000	Reflector to fit Standard Aperture, Special Vee Block	
AT-3134	988303-000	Reflector to fit Large Aperture, Standard Vee Block	
AE-897	966953-000	Conversion kit from Standard to Large Aperture	
AD-7-100	176247-000	External Viewing Window	
AT-3147	988328-000	Reflector to fit Large Aperture with Clamps	
AT-3132-Mk31/1	879865-000	Reflector to fit Standard Aperture with Clamps and with 5 mm wide mask	Aerospatiale “special” reflector.
AT-3131	988300-000	Reflector to fit Standard Aperture	Reflector for IR1759 for SolderTact products with a vee block at one end
AT-3132	988301-000	Reflector to fit Standard Aperture with Clamps	Reflector for IR1759 for SolderSleeve products using clamps to hold wire in place
AT-3130	988299-000	Reflector to fit Standard Aperture, Standard	Reflector for IR1759 for SolderSleeve products using Vee Block gravity to hold wire in place
SPARE PARTS			
AE-226	988314-000	Outer Reflector Mirror for AT-3134/AT-3147	
AE-424	547918-000	Inner Reflector for Standard Aperture	
AE-1367	338605-000	Hook	
NAE-143-3	988208-000	Bulb 250W/24V	
AE-153	988285-000	Inner Reflector for Large Aperture	
AD-1360	106503-000	Standard Thermal Shield	
AE-205	988596-000	Outer Reflector Mirror for AT-3130/AT3131/AT-3132	
NAE-109-2	988382-000	Lamp Holder	
AES-IR1759-100-Filter-Dul	431468-000	Filter for Standard Aperture	
IR1759/3104-Cable-Asy	585643-000	Trigger PCB, Cable Assembly, Includes Lamp Holder and Fan	
AE-770	747525-000	Optic Bloc for IR1759	
AE-900	277774-000	Filter Spring IR1759	
NAE-152-1	988204-000	Fan	
AT-3130-AE204-AE203-10SET	481321-000	Replacement for Vs for AT3130 V Block	AE-203 & AE-204 are two halves of AT-3130 V Block, supplied in quantities of 10 sets
AES-IR1759-300-FLTR-LRG	F52511-000	Filter for Large Aperture Heatgun	

IR-1759 MiniRay Infrared Heating Tool (Continued)

Parts, Accessories and Spare Parts List (continued)

Description	Part Number	Guideline	Comments
ED-7-CONT-230/110V-Mk4	CF0026-000	None Timed Control Box - 230V or 110V Supply	Replaces ED-7-Cont-230/110V 684886-000
ED-7-BATTBOX-MK4-230/110V	CF0200-000	Battery Powered Controlled for IR-1759 (230V or 110V Supply) - RoHS compliant version	Replaces ED-7-BatteryBox-230/110V/448969-000. Batteries not included. When purchasing the controller, order ED-7-Batt-Battery 755928-000 also.
ED-7-001-MK4-230V-50HZA	CF0199-000	Control Box 230V, with Timer	Replaces Ed-7-001-Mk2-230V-50Hz/869233-000
ED-7-002-MK4-110V-60HZA	CF0201-000	Control Box 110V, with Timer	Replaces Ed-7-002-Mk2-110V-60Hz/903553-000
ACCESSORIES			
ED-7-Cont-Front-Panel	619690-000	Front Panel and Display PCB including Triac and Inductor	
ED-7-Cont-Transformer	139128-000	Transformer	
ED-7-Batt-Battery	755928-000	Battery Pack	
ED-7-Batt-Front-Panel	132692-000	Front Panel and Display PCB with Logic PCB and Power PCB	
ED-7-001/2-Transformer	584781-000	ED-7-001 & ED-7-002 Transformer	
ED-7-001/2-Front-Panel	524325-000	ED-7-001 & ED-7-002 Front Panel	

Model 16B Belt Heater

Product Facts

- **Controlled heating for installation of Raychem brand heat-shrinkable tubing at rates required for mass production**
- **Controlled repeatable heating: time and temperature settings can be fixed to maintain repeatable installation parameters**
- **Part positioning that is clearly defined and easy to maintain**
- **Operation that requires only minimal skill**
- **Efficient and economical operation, which greatly reduces labor costs. In most cases the throughput rate is limited only by the rate at which an operator can load parts into the heater**

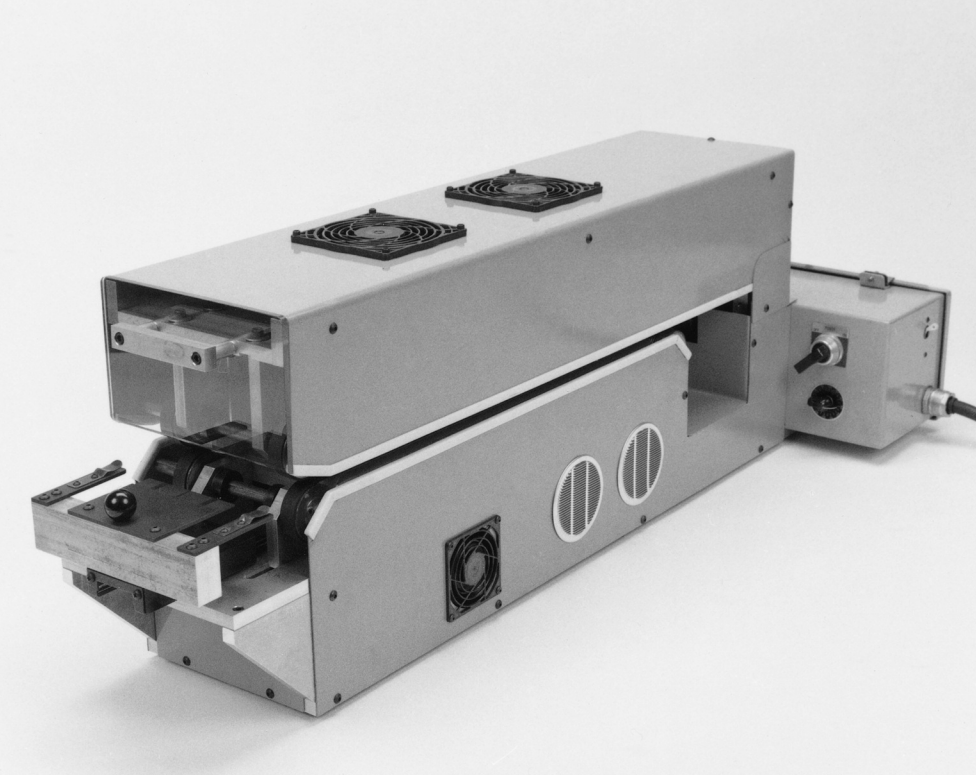

Applications

Designed for processing a broad range of heat-shrinkable tubing products up to 19 [75] in diameter and 101 [4.0] long. Suitable for either single-wall or adhesive-lined tubing. Heating-element temperature is adjustable up to 600°C [1112°F] and the belt speed is adjustable to 2.28 [7.5] per minute. Operator simply positions the heat-shrink tubing over the assembly and feeds it into the process chamber. Heating and cooling take place automatically with the cables or wires securely fixed.

Available in:	Americas	Europe	Asia Pacific
	■		■

Catalog 1654025
Revised 3-13

www.te.com

Dimensions are shown for reference purposes only. Specifications subject to change.

Dimensions are in millimeters unless otherwise specified.

USA: +1 800 522 6752
Asia Pacific: +86 0 400 820 6015
UK: +44 800 267 666

For additional support numbers please visit www.te.com

Model 16B Belt Heater (Continued)

Specifications and Dimensions

Electrical	Part No. 827429-000	Part No. 047143-000	Part No. 584313-000
Power requirements	120 Vac, 1 Ø, 50/60 Hz, 20 A	220 Vac, 1 Ø, 50/60 Hz, 15 A, 3-wire	230 Vac, 1 Ø, 50/60 Hz, 15 A, 4-wire
Heating elements	875 W (upper and lower)	875 W (upper and lower)	875 W (upper and lower)

Mechanical	
Conveyor belt system	Two sets of pinch belts right and left, four belts total
Machine dimensions	48 cm [19 in] W x 110 cm [43 in] L x 33 cm [13 in] H
Shipping dimensions	61 cm [24 in] W x 111 cm [44 in] L x 56 cm [42 in] H
Machine weight without crate	55 Kg [120 lb]
Shipping weight with crate	91 Kg [200 lb]

Tubing Sizes	
Inside diameter before recovery	Up to 19 mm [0.75 in]
Length	Up to 101mm [4.0 in]

Catalog 1654025
Revised 3-13

www.te.com

Dimensions are shown for reference purposes only. Specifications subject to change.

Dimensions are in millimeters unless otherwise specified.

USA: +1 800 522 6752
Asia Pacific: +86 0 400 820 6015
UK: +44 800 267 666

For additional support numbers please visit www.te.com

Model 19 Conveyor Heater for Processing Raychem Brand Heat-Shrinkable Tubing and Termination Devices

Product Facts

- **Closed-loop speed and temperature control**
- **CE approved for worldwide use**
- **Adaptable for different applications**
- **Continuous controlled process**

Available in:	
Americas	■
Europe	■
Asia Pacific	■

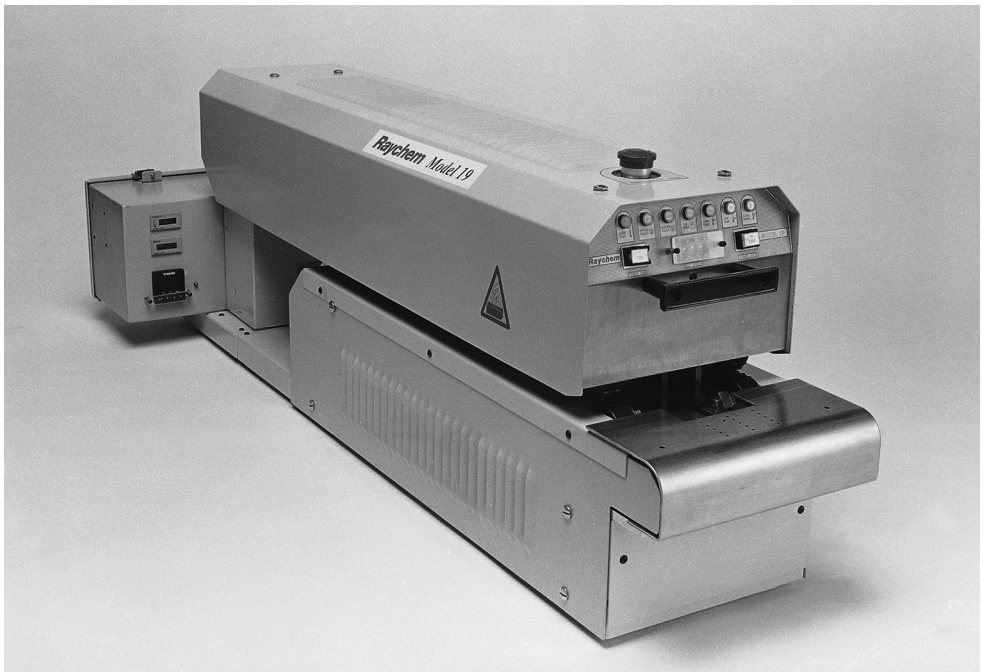

Applications

The Model 19 conveyor heater is the latest generation of reliable and versatile process heaters for a wide variety of heat-shrinkable products.

Two sets of timing belts grip the individual assemblies and carry them through a closed-loop infrared heating zone, then through a cooling zone, and deposit the completed assemblies in a collection bin.

The processor was designed to meet the requirements of the European Safety Directives and is CE approved, allowing for worldwide use.

The processor is designed to operate on the following line voltages: 210 to 240 Vac, 20 A, 1 Ø, 50/60 Hz.

Options for this processor include:

- Powered or unpowered extension tables to support long or heavy harnesses.
- Kit for processing ring terminals and end terminations.
- Floor stand with wheels.
- Wider heating elements for tubing up to 178 [7.0] long.
- Narrow heating elements for SolderSleeve devices up to 10 [0.4] diameter and 45 [1.8] long or short length tubing less than 50 mm [2.0].

Product Features
Controlled Heating Zone

The Model 19 has two etched- foil heating elements mounted under a quartz face. Consistent heating chamber temperatures are obtained with a closed-loop temperature controller. There is a lockout on the controller to prevent unauthorized changes.

Speed Control

Consistent speed is obtained with a closed-loop speed controller. The speed is adjusted using a 3-digit thumbwheel on the front control panel. There is a lockout on the thumbwheel to prevent unauthorized changes.

Minimal Skill Requirements

There are clearly marked guides for aligning the assembly as well as the tubing or device being processed. The operator only has to center the assembly; the grippers carry it through the heating and cooling zone and deposit it into the unloading bin.

Economical Production

The throughput rate is determined by the rate at which an operator can load the processor.

Self-Diagnostic Circuitry

There are several “self-diagnostic” circuits that alert the operator if any major component fails or if an unsafe processing condition occurs. A light will turn on and a lockout gate will lift in the entry zone, preventing the operator from loading assemblies until the situation has been corrected.

Other Features Include:

- Emergency stop.
- Automatic cool-down circuit to extend the life of components.
- Lockout on temperature and speed controllers to prevent unauthorized changes.

Catalog 1654025
Revised 3-13

www.te.com

Dimensions are shown for reference purposes only. Specifications subject to change.

Dimensions are in millimeters unless otherwise specified.

USA: +1 800 522 6752
Asia Pacific: +86 0 400 820 6015
UK: +44 800 267 666

For additional support numbers please visit www.te.com

Model 19 Conveyor Heater for Processing Raychem Brand Heat-Shrinkable Tubing and Termination Devices (Continued)

Specifications and Dimensions

Electrical	
Power requirements	210–240 Vac, 20 A, 1 Ø, 50/60 Hz
Heating elements	Std = 3160 W/Wide = 3320 W/Narrow = 1760 W

Mechanical	
Conveyor belt system	Double-sided timing belts, pitch - 9.5 [0.375]
Belt speed	Up to 152 cm/min [5.0/min]
Processor dimensions	53 cm [21 in] W, 135 cm [53 in] L, 45 cm [18 in] H
Shipping dimensions	66 cm [26 in] W, 147 cm [58 in] L, 58 cm [23 in] H
Shipping weight with crate	86 Kg [190 lb]

Tubing sizes	
Tubing diameter (max)	25 mm [1.0 in]
Tubing length (max)	102 mm [4.0 in] 178 mm [7.0 in] wide heating element tool 50 mm [2.0 in] narrow heating element tool
Work-piece length (min)	240 mm [9.5 in]

Version	Part No.
Model 19 Standard	714529-000
Model 19 Wide	075131-000

Catalog 1654025
Revised 3-13

www.te.com

Dimensions are shown for reference purposes only. Specifications subject to change.

Dimensions are in millimeters unless otherwise specified.

USA: +1 800 522 6752
Asia Pacific: +86 0 400 820 6015
UK: +44 800 267 666

For additional support numbers please visit www.te.com

Model 81CE Discrete Heater

Product Facts

- **Closed-loop temperature control for a precise and repeatable thermal process**
- **Oven dwell time precisely set by a 3-digit thumb wheel digital timer**
- **Heat output can be controlled to accommodate a wide variety of applications**
- **Operation requires only minimal skill**
- **Contains numerous safety features**
- **Meets the requirements of CE, OSHA and the NEC**

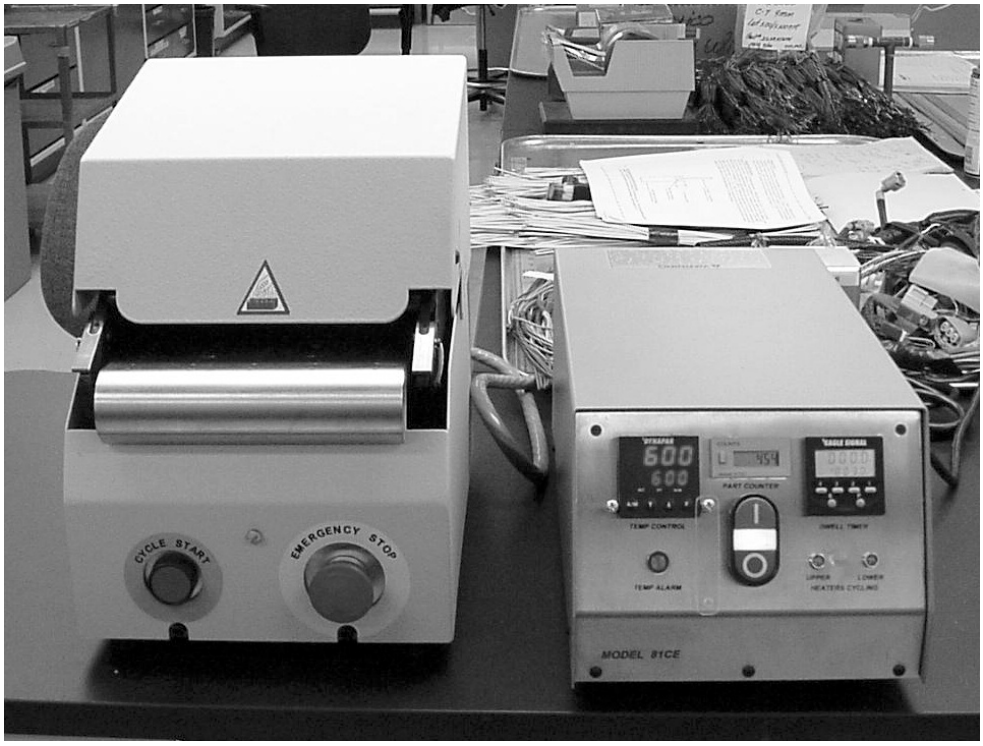

Applications

The Model 81CE is a discrete heater that can process large, complex assemblies or other suitable substrates using a wide variety of heat-shrinkable tubing products up to 25 mm [1.0] in diameter and 127 mm [5.0] in length. It is suitable for use with both single wall and adhesive-lined tubing. Two jaws grip the assembly or substrate, carry it into an infrared heating chamber for a user-selectable predetermined period of time, then return the completed assembly back to the start position for removal.

Available in:	Americas	Europe	Asia Pacific
	■	■	■

Catalog 1654025
Revised 3-13

www.te.com

Dimensions are shown for reference purposes only. Specifications subject to change.

Dimensions are in millimeters unless otherwise specified.

USA: +1 800 522 6752
Asia Pacific: +86 0 400 820 6015
UK: +44 800 267 666

For additional support numbers please visit www.te.com

Model 81CE Discrete Heater (Continued)

Specifications and Dimensions

Electrical	Part No. 071965-000	Part No. 704393-000
Power requirements	120 VAC, 1Ø, 50/60 Hz, 15 A	220 VAC, 1Ø, 50/60 Hz, 15 A
Heating elements	Two 400 watt infrared stamped foil with infrared heating elements, one top and bottom.	Two 400 watt infrared stamped foil with infrared heating elements, one top and bottom.
Timing system	Eagle digital timer, 1 to 999 seconds	Eagle digital timer, 1 to 999 seconds
Pneumatic		
Requirements for jaw traverse	30-40 psi clean shop air	30-40 psi clean shop air
Dimensions		
Control box dimensions:		
Length	432 mm [17 in]	432 mm [17 in]
Width	216 mm [9 in]	216 mm [9 in]
Height	165 mm [7 in]	165 mm [7 in]
Control box weight	7.7 Kg [17 lb.]	7.7 kg [17 lb.]
Heating chamber dimensions:		
Length	380 mm [15 in]	380 mm [15 in]
Width	240 mm [10 in]	240 mm [10 in]
Height	343 mm [14 in]	343 mm [14 in]
Heating chamber weight	18 Kg [40 lb.]	18 kg [40 lb.]
Shipping Dimensions		
Length	610 mm [24 in]	610 mm [24 in]
Width	610 mm [24 in]	610 mm [24 in]
Height	530 mm [21 in]	530 mm [21 in]
Shipping weight	41 Kg [90 lb.]	41 kg [90 lb.]
Tubing Sizes		
Inside diameter before heat	Up to 25.4 mm [1 in]	Up to 25.4 mm [1 in]
Length	Up to 127 mm [5 in]	Up to 127 mm [5 in]

Catalog 1654025
Revised 3-13

www.te.com

Dimensions are shown for reference purposes only. Specifications subject to change.

Dimensions are in millimeters unless otherwise specified.

USA: +1 800 522 6752
Asia Pacific: +86 0 400 820 6015
UK: +44 800 267 666

For additional support numbers please visit www.te.com

Model 105 Tunnel Oven

Product Facts

- **Closed-loop temperature control for a precise and repeatable thermal process**
- **Conveyor speed precisely set by a 3-digit potentiometer**
- **Operation requires only minimal skill**
- **Contains numerous safety features**
- **Custom length conveyors for longer entry and/or exit sections available**
- **Optional accessories to customize the tunnel oven**

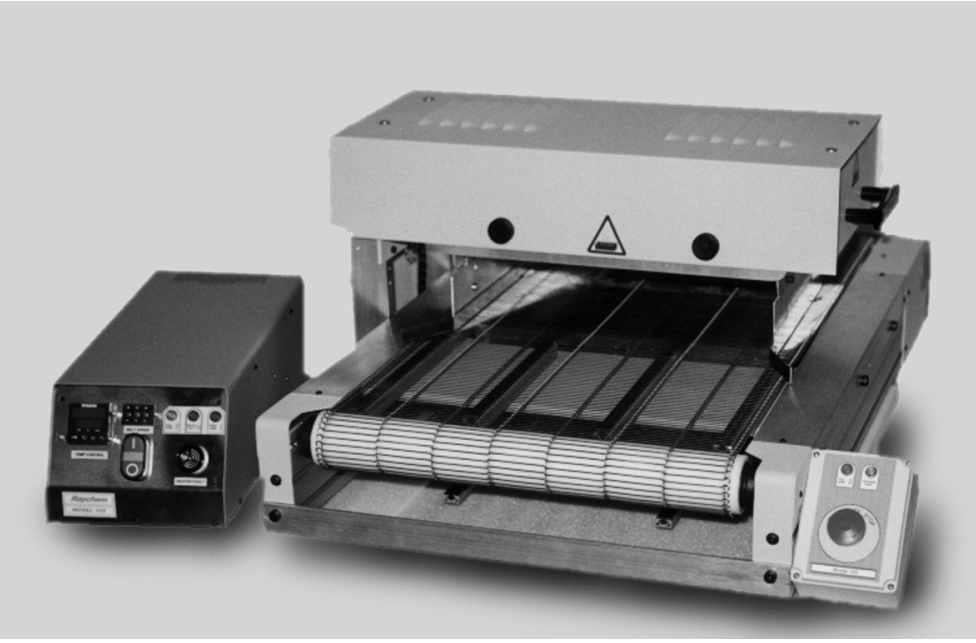

Applications

Table conveyor heater that provides a controlled process system suitable for installing a wide variety of heat-shrinkable tubing products up to 76 mm [3.0] diameter and unlimited in length. Ideally suited for efficient processing of fiber and fabric HFT and both single wall and dual wall tubing. Designed as an integrated modular unit. Assemblies are placed on the entry section of a mesh belt, transported through a heating chamber, across a bank of cooling fans then discharged from the rear of the conveyor.

Available in:	Americas	Europe	Asia Pacific
	■	■	■

Catalog 1654025
Revised 3-13

www.te.com

Dimensions are shown for reference purposes only. Specifications subject to change.

Dimensions are in millimeters unless otherwise specified.

USA: +1 800 522 6752
Asia Pacific: +86 0 400 820 6015
UK: +44 800 267 666

For additional support numbers please visit www.te.com

Model 105 Tunnel Oven (Continued)

Specifications and Dimensions

Electrical	Part number 955018-000
Power requirements	208/240 VAC, 1Ø, 50/60 Hz, 15 A
Heating elements	Two 1500 watt infrared stamped foil with black quartz face, one top and bottom
Operating temperature	Ambient to 650°C [1202°F]
Drive System	DC motor with SCR drive controller and 3 digit speed potentiometer
Conveyor Speed	0.06 M/min. to 1.5 M/min. [0.20 to 5.0 ft/min]
Conveyor Belt	Wire mesh 70% open
Heater Oven Gap	2 Position; 53.6 mm [2.11 in] Lower Position, 98 mm [3.86 in] Upper Position
Effective heating width	356 mm [14 in]

Dimensions	
Control box dimensions	
Length	515 mm [20 in]
Width	210 mm [8 in]
Height	178 mm [7 in]
Control box weight	7.7 Kg [17 lb]
Heating conveyor dimensions	
Length	990 mm [39 in]
Width	685 mm [27 in]
Height	417 mm [17 in]
Heating conveyor weight	68 Kg [150 lb]

Shipping Dimensions	
Length	1346 mm [53 in]
Width	1168 mm [46 in]
Height	635 mm [25 in]
Shipping weight	146 Kg [320 lb]

Tubing sizes	
Inside diameter before heat	Up to 76.2 mm [3 in]
Length	
Perpendicular to belt travel	356 mm [14 in]
Parallel to belt travel	Unlimited

Optional Accessories

- Powered outboard conveyor for processing large assemblies that require only a portion of the assembly to be heated (1 side only).
- Powered entry and exit conveyors for processing long and rigid assemblies requiring entry and exit support of the product.
- Ability to add additional heater chambers to extended custom length wire mesh conveyors.
- Custom floor stands.

Catalog 1654025
Revised 3-13

www.te.com

Dimensions are shown for reference purposes only. Specifications subject to change.

Dimensions are in millimeters unless otherwise specified.

USA: +1 800 522 6752
Asia Pacific: +86 0 400 820 6015
UK: +44 800 267 666

For additional support numbers please visit www.te.com

RBK-ILS-Processor MkII

Semi-Automatic Unit for Installation of Splice Sealing Products Adjacent to Ultrasonic Welder

Product Facts

- **Increased heating element life**
- **Installation times, temperatures and product size information (individual selection)**
- **Sequenced installations**
- **Operator key lock/password protection levels**
- **Automatic heater retraction on mains failure**
- **Automatic calibration (single cycle)**
- **RS232 interface allows time, temperature and product sizes for the next installation to be transferred from a remote machine (e.g. an ultrasonic welding tool)**
- **Machine hours and installation cycle counters**
- **Software upgradeable to support special applications**
- **Air cooling can be provided to an optional stub splice fixture in the RBK-Proc-MK2-Proc-Aircool version**

Applications

The RBK-ILS-Processor MkII is a semi-automatic unit designed specifically to install splice sealing products onto ultrasonically welded or crimped splice joints used in automotive harnesses.

The operator is able to efficiently load both machines which minimizes ‘dead time’. Installing Raychem brand splice sealing products immediately after welding gives reduced installation time and earliest possible mechanical protection for the welded joint.

The operator positions the splice sealing product centrally over the splice joint and then locates the assembly into the gripper mechanism.

Pushing the two start buttons initiates the machine cycle thus bringing the heating chamber into place over the joint area. The heating chamber remains in place for the set period and then returns to the rest position. In doing so, the wire assembly is automatically ejected, with the splice sealing product installed and the joint area sealed, insulated and strain relieved.

Available in:	Americas	Europe	Asia Pacific
	■	■	■

Catalog 1654025
Revised 3-13

www.te.com

Dimensions are shown for reference purposes only. Specifications subject to change.

Dimensions are in millimeters unless otherwise specified.

USA: +1 800 522 6752
Asia Pacific: +86 0 400 820 6015
UK: +44 800 267 666

For additional support numbers please visit www.te.com

RBK-ILS-Processor MkII (Continued)

Semi-Automatic Unit for Installation of Splice Sealing Products Adjacent to Ultrasonic Welder
(Continued)

Technical Specification

Electrical Supply	220V-240V-50Hz
Power Consumption	1.7 Amps (Max)
Operating Temperature	550°C [1022°F] (Max) (500°C [932°F] recommended)
Machine Cycle Times for splice sealing products used on typical range of automotive splices	6 to 20 seconds depending on wire size and the number or wires used
Total System Noise	<80dB
Dimensions	390 x 365 x 225 mm [15 x 14 x 9 in.]
Weight	18 Kg [40 lb]

Product Range

RBK-ILS-125 Products	Sizes 1 to 3A
RBK-ILS-85 Products	Sizes 6/1 to 12/3
For Other Products (eg. RBK-VWS, RBK-ESS….)	Contact TE

Ordering Information

	Description	Part No.
Equipment	RBK-Proc-Mk2-Processor RBK-Proc-MK2-Proc-Aircool	740331-000 A96930-000
Accessories	RBK-ILS-Proc-Stub-Sp-Fix RBK-ILS-Proc-Air-Cool-Kit RBK-ILS-Proc-Termfix-08mm	981721-000 843800-000 049857-000

Dimensions are shown for reference purposes only. Specifications subject to change.

Dimensions are in millimeters unless otherwise specified.

USA: +1 800 522 6752
Asia Pacific: +86 0 400 820 6015
UK: +44 800 267 666

For additional support numbers please visit www.te.com

ThermoGun HG Hot-Air Heating Tool

Product Facts

- **Stand-mounted or handheld, rugged unit for heavy-duty use**
- **Built-in stand and turbo-fan-driven blower**
- **Adjustable side vents**
- **Adjustable temperature**
- **1680 to 2160 watts**
- **Large reflector size**
- **High heat output for fast installation**

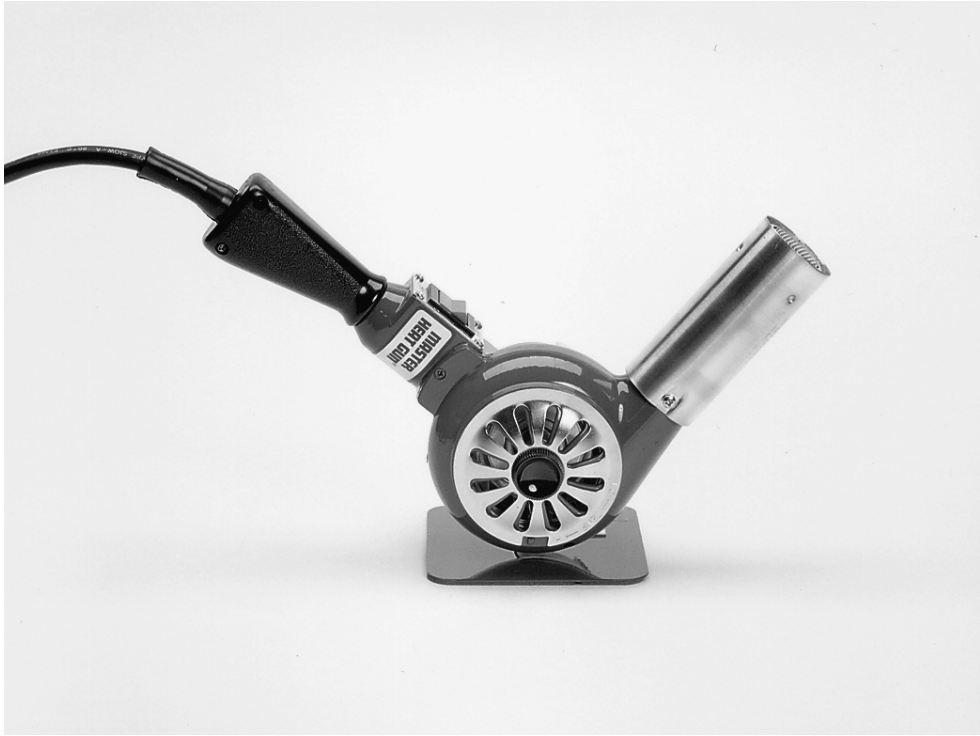

Applications

Used for installing molded parts onto adapters or harnesses and installing a broad range of heat-shrinkable products, including boots and tubing up to three inches in diameter..

Specifications

Model	Power Requirements	Input Watts	Temperature Range	CFM*	RPM**
HG-501A	120 V, 60 Hz, 14 A	1680	260°C–399°C [500°F–750°F]	23	1700
HG-502A	230 V, 50/60 Hz, 7 A	1680	260°C–399°C [500°F–750°F]	23	1700
HG-751A-C	120 V, 60 Hz, 18 A	2160	399°C–538°C [750°F–1000°F]	23	1700
HG-752A	230 V, 50/60 Hz, 9 A	1740	399°C–538°C [750°F–1000°F]	23	1700

*CFM = Cubic feet per minute.
**RPM = Revolutions per minute.

Available in:	Americas	Europe	Asia Pacific
	■		■

Catalog 1654025
Revised 3-13

www.te.com

Dimensions are shown for reference purposes only. Specifications subject to change.

Dimensions are in millimeters unless otherwise specified.

USA: +1 800 522 6752
Asia Pacific: +86 0 400 820 6015
UK: +44 800 267 666

For additional support numbers please visit www.te.com

ThermoGun HG Hot-Air Heating Tool (Continued)

Accessories

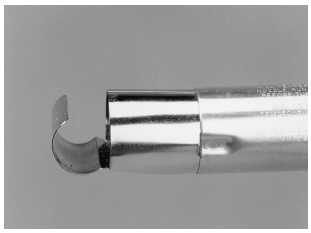

A-160-HG reflector (P/N 991017) for short lengths of tubing up to 19.05 [75] in diameter. Must be ordered separately.

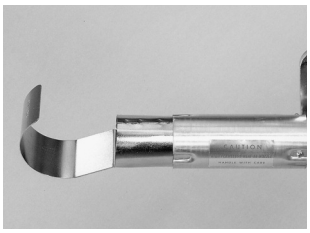

A-170-HG reflector (P/N 991018) for short lengths of tubing 19.05–50.8 [.75–2] in diameter. Must be ordered separately.

TG-23 reflector (P/N 991026) for boots up to 44.45 [1.75] in diameter. Must be ordered separately.

Ordering Information

Model*	Housing Color	Part No.
HG-501A	Red	462047-000
HG-502A	Red	389363-000
HG-751A-C	Red	926935-000
HG-752A	Red	026239-000

Accessories	Tubing Application	Part No.
A-160-HG standard reflector	Diameters up to 19.05 mm [0.75 in]	991017-000
A-170-HG large tubing reflector	Diameters of 19.05–50.8 mm [0.75–2 in]	991018-000
TG-23 small boot reflector	Diameters up to 44.5 mm [1.75 in]	991026-000
TG-24 large boot reflector	—	991027-000

*Complete with bench stand.

Catalog 1654025
Revised 3-13

www.te.com

Dimensions are shown for reference purposes only. Specifications subject to change.

Dimensions are in millimeters unless otherwise specified.

USA: +1 800 522 6752
Asia Pacific: +86 0 400 820 6015
UK: +44 800 267 666

For additional support numbers please visit www.te.com

Engineering Notes

Catalog 1654025
Revised 3-13

www.te.com

Dimensions are shown for reference purposes only. Specifications subject to change.

Dimensions are in millimeters unless otherwise specified.

USA: +1 800 522 6752
Asia Pacific: +86 0 400 820 6015
UK: +44 800 267 666

For additional support numbers please visit www.te.com

Table of Contents

Equivalents and Conversions 11-2, 11-3
Temperature Conversion Formula 11-3, 11-4
Glossary ..... 11-5 to 11-13
Part/Product Index ..... 11-14 to 11-26

Catalog 1654025
Revised 3-13

www.te.com

Dimensions are shown for reference purposes only. Specifications subject to change.

Dimensions are in millimeters unless otherwise specified.

USA: +1 800 522 6752
Asia Pacific: +86 0 400 820 6015
UK: +44 800 267 666

For additional support numbers please visit www.te.com

Equivalents and Conversions

Decimal Equivalents

Fraction of Inch	Decimal of Inch	Decimal Millimeters	Fraction of Inch	Decimal of Inch	Decimal Millimeters
1/64	.0156	0.3969		.5118	13.0000
1/32	.0313	0.7938	33/64	.5156	13.0969
	.0394	1.0000	17/32	.5313	13.4938
3/64	.0469	1.1906	35/64	.5469	13.8906
1/16	.0625	1.5875		.5512	14.0000
5/64	.0781	1.9844	9/16	.5625	14.2875
	.0787	2.0000	37/64	.5781	14.6844
3/32	.0938	2.3813		.5906	15.0000
7/64	.1094	2.7781	19/32	.5938	15.0813
	.1181	3.0000	39/64	.6094	15.4781
1/8	.1250	3.1750	5/8	.6250	15.8750
9/64	.1406	3.5719		.6299	16.0000
5/32	.1563	3.9688	41/64	.6406	16.2719
	.1575	4.0000	21/32	.6563	16.6688
11/64	.1719	4.3656		.6693	17.0000
3/16	.1875	4.7625	43/64	.6719	17.0656
	.1969	5.0000	11/16	.6875	17.4625
13/64	.2031	5.1594	45/64	.7031	17.8594
7/32	.2188	5.5563		.7087	18.0000
15/64	.2344	5.9531	23/32	.7188	18.2563
	.2362	6.0000	47/64	.7344	18.6531
1/4	.2500	6.3500		.7480	19.0000
17/64	.2656	6.7469	3/4	.7500	19.0500
	.2756	7.0000	49/64	.7656	19.4469
9/32	.2813	7.1438	25/32	.7813	19.8438
19/64	.2969	7.5406		.7874	20.0000
5/16	.3125	7.9375	51/64	.7969	20.2406
	.3150	8.0000	13/16	.8125	20.6375
21/64	.3281	8.3344		.8268	21.0000
11/32	.3438	8.7313	53/64	.8281	21.0344
	.3543	9.0000	27/32	.8438	21.4313
23/64	.3594	9.1281	55/64	.8594	21.8281
3/8	.3750	9.5250		.8661	22.0000
25/64	.3906	9.9219	7/8	.8750	22.2250
	.3937	10.0000	57/64	.8906	22.6219
13/32	.4063	10.3188		.9055	23.0000
27/64	.4219	10.7156	29.32	.9063	23.0188
	.4331	11.0000	59/64	.9219	23.4156
7/16	.4375	11.1125	15/16	.9375	23.8125
29/64	.4531	11.5094		.9449	24.0000
15/32	.4688	11.9063	61/64	.9531	24.2094
	.4724	12.0000	31/32	.9688	24.6063
31/64	.4844	12.3031		.9843	25.0000
1/2	.5000	12.7000	63/64	.9844	25.0031
			1	1.0000	25.4000

Prefixes (SI), Values, and Symbols

Prefix	Value	Symbol	Prefix	Value	Symbol
Tera	1012	T	Deci	10-1	d
Giga	109	G	Centi	10-2	c
Mega	106	M	Milli	10-3	m
Kilo	103	k	Micro	10-6	µ
Hecto	102	h	Nano	10-9	n
Deca	101	da	Pico	10-12	p

Catalog 1654025
Revised 3-13

www.te.com

Dimensions are shown for reference purposes only. Specifications subject to change.

Dimensions are in millimeters unless otherwise specified.

USA: +1 800 522 6752
Asia Pacific: +86 0 400 820 6015
UK: +44 800 267 666

For additional support numbers please visit www.te.com

Equivalents and Conversions (Continued)

Conversion Factors

Length	Area	Volume	Mass
Inches x 25.40 = Millimeters	Sq. inches x 6.452 = Sq. centimeters	Cu. inches x 16.39 = Cu. centimeters	Ounces x 28.35 = Grams
Millimeters x 0.03937 = Inches	Sq. centimeters x 0.1550 = Sq. inches	Cu. cm. x 0.06102 = Cu. inches	Grams x 0.03527 = Ounces
Feet x 0.3048 = Meters	Sq. feet x 0.0929 = Sq. meters	Cu. feet x 0.02832 = Cu. meters	Pounds x 0.4536 = Kilograms
Meters x 3.281 = Feet	Sq. meters x 10.76 = Sq. feet	Cu. meters x 35.31 = Cu. feet	Kilograms x 2.205 = Pounds
Miles x 1.609 = Kilometers	Sq. miles x 2.59 = Sq. kilometers		Kilograms/km x 0.6214 = Pounds/kft
Kilometers x 0.6214 = Miles	Sq. kilometers x 0.3861 = Sq. miles		Pounds/kft x 1.4881 = Kilograms/km
Ohms/km x 0.3048 = Ohms/kft	Circular mils x 0.7854 = Sq. mil		

Temperature Conversion Formula

°C = (°F -32) ÷ 1.8
°F = (°C x 1.8) + 32

°F	°C	°F	°C	°F	°C	°F	°C
-103	-75.00	-30	-34.44	25	-3.89	65	18.33
-101.2	-74.00	-28	-33.33	26	-3.33	66	18.89
-99.4	-73.00	-26	-32.22	27	-2.78	67	19.44
-97.6	-72.00	-24	-31.11	28	-2.22	68	20.00
-95.8	-71.00	-22	-30.00	29	-1.67	69	20.56
-94.0	-70.00	-20	-28.89	30	-1.11	70	21.11
-92.2	-69.00	-18	-27.78	31	-0.56	71	21.67
-90.4	-68.00	-16	-26.67	32	0.00	72	22.22
-88.6	-67.00	-14	25.56	33	0.56	73	22.78
-86.8	-66.00	-12	-24.44	34	1.11	74	23.33
-85.0	-65.00	-10	-23.33	35	1.67	75	23.89
-83.2	-64.00	-8	-22.22	36	2.22	77	25.00
-81.4	-63.00	-6	-21.11	37	2.78	77	25.00
-79.6	-62.00	-4	-20.00	38	3.33	78	25.56
-77.8	-61.00	-2	-18.89	39	3.89	79	26.11
-76.0	-60.00	0	-17.78	40	4.44	80	26.67
-74.2	-59.00	1	-17.22	41	5.00	81	27.72
-72.4	-58.00	2	-16.67	42	5.56	82	27.78
-70.6	-57.00	3	-16.11	43	6.11	83	28.33
-68.8	-56.00	4	-15.56	44	6.67	84	28.89
-67.0	-55.00	5	-15.00	45	7.22	85	29.44
-65.2	-54.00	6	-14.44	46	7.78	86	30.00
-63.4	-53.00	7	-13.89	47	8.33	87	30.56
-61.6	-52.00	8	-13.33	48	8.89	88	31.11
-59.8	-51.00	9	-12.78	49	9.44	89	31.67
-58.0	-50.00	10	-12.22	50	10.00	90	32.22
-56.2	-49.00	11	-11.67	51	10.56	91	32.78
-54.4	-48.00	12	-11.11	52	11.11	92	33.33
-52.6	-47.00	13	-10.56	53	11.67	93	33.89
-50.8	-46.00	14	-10.00	54	12.22	94	34.44
-49.0	-45.00	15	-0.44	55	12.78	95	35.00
-47.2	-44.00	16	-8.89	56	13.33	96	35.56
-45.4	-43.00	17	-8.33	57	13.89	97	36.11
-43.6	-42.00	18	-7.78	58	14.44	98	36.67
-41.8	-41.00	19	-7.22	59	15.00	99	37.22
-40	-40.00	22	-6.11	60	15.56	100	37.78
-38	-38.89	21	-6.11	61	16.11	101	38.33
-36	-37.78	22	-5.56	62	16.67	102	38.88
-34	-36.67	23	-5.00	63	17.22	103	39.44
-32	-35.56	24	-4.44	64	17.78	104	40.00

Catalog 1654025
Revised 3-13

www.te.com

Dimensions are shown for reference purposes only. Specifications subject to change.

Dimensions are in millimeters unless otherwise specified.

USA: +1 800 522 6752
Asia Pacific: +86 0 400 820 6015
UK: +44 800 267 666

For additional support numbers please visit www.te.com

Temperature Conversion Formula (Continued)

°C = (°F -32) ÷ 1.8
°F = (°C x 1.8) + 32
(Continued)

°F	°C	°F	°C	°F	°C	°F	°C
105	40.55	145	62.78	185	85.00	325	162.78
106	41.11	146	63.33	186	85.55	330	165.56
107	41.66	147	63.88	187	86.11	335	168.33
108	42.22	148	64.44	189	87.22	340	171.11
109	42.77	149	65.00	189	87.22	345	173.89
110	43.33	150	65.56	190	87.78	350	176.67
111	43.88	151	66.11	191	88.33	355	179.44
112	44.44	152	66.66	192	88.88	360	182.22
113	45.00	153	67.22	193	89.44	365	185.00
114	45.55	154	67.77	194	90.00	370	187.78
115	46.11	155	68.33	195	90.55	375	190.55
116	46.66	156	68.88	196	91.11	380	193.33
117	47.22	157	69.44	197	91.66	385	196.11
118	47.77	158	70.00	198	92.22	390	198.89
119	48.33	159	70.55	199	92.77	395	201.67
120	48.89	160	71.11	200	93.33	400	204.44
121	49.44	161	71.66	205	96.11	405	207.22
122	50.00	162	72.22	210	98.89	410	210.00
123	50.55	163	72.77	215	101.67	415	212.78
124	51.11	164	73.33	220	104.44	425	215.56
125	51.67	165	73.89	225	107.22	425	218.33
126	52.22	166	74.44	230	110.00	430	221.11
127	52.77	167	75.00	235	112.78	435	223.89
128	53.33	168	75.55	240	115.56	440	226.67
129	53.88	169	76.11	245	118.33	445	229.44
130	54.44	170	76.67	250	121.11	450	232.22
131	55.00	171	77.22	255	123.89	455	235.00
133	56.11	172	77.77	260	126.67	460	237.78
133	56.11	173	78.33	265	129.44	465	240.55
134	56.66	174	78.88	270	132.22	470	243.33
135	57.22	175	79.44	275	135.00	475	246.11
136	57.77	176	80.00	280	137.78	480	248.89
137	58.33	177	80.55	285	140.55	485	251.67
138	58.88	178	81.11	290	143.33	490	254.44
139	59.44	179	88.66	295	146.11	495	257.22
140	60.00	180	82.22	300	148.89		
141	60.55	181	82.77	305	151.67		
142	61.11	182	83.33	310	154.44		
143	61.66	183	83.88	315	157.22		
144	62.22	184	84.44	320	160.00		

Glossary

Abrasion-resistance
A measure of the ability of a wire or wire covering to resist damage by mechanical means.

Accelerated Aging
A test in which voltage, temperature, or other test parameters are increased above normal operating values to obtain observable deterioration in a relatively short time. The plotted results give service life within the context of the test.

Adapter
A device usually attached to the rear of connectors that provides for the attachment of harnessing components, such as strain-relief clamps, heat-shrinkable boots, and braid.

Adhesive Liner
Lining that melts and flows inside a sleeve or molded part, filling any voids in between the substrate and the sleeve or molded part. DuraSeal has an adhesive liner.

Adhesive (Hot Melt)
Dual-wall tubing and precoated molded parts whose inner layer melts and flows when heated, fills voids in the areas being covered, and forms a mechanical bond to the substrate. Unlike an encapsulant, an adhesive forms a mechanical bond to the substrate.

Aging
Change in the properties of a material over time and under specific conditions. Generally refers to environmental stimulus such as heat and light.

Altitude Immersion Seal
A seal able to withstand substantial pressure change (for example, from sea level to 75,000 feet).

Amnesia
The tendency over time for a heat-shrinkable elastomeric tubing or molded part to fail to recover completely to its specified recovered size.
See Shelf Life.

Ampacity
See Current-carrying Capacity.

ASTM
(American Society for Testing and Materials)
A nonprofit industry wide organization that formulates test methods and material specifications, and publishes standards, testing methods, recommended practices, definitions, and other materials.

Attenuation
Power loss resulting in weaker signals in an electrical system as the signals travel along wires. In cables, generally expressed in dB per unit length, usually 100 feet.

AWG
(American Wire Gauge)
The recognized method (in the United States) of specifying conductor size. The higher the gauge number, the smaller the conductor size.

Back-mounted
A termination assembly mounted from the inside of a panel or box with its mounting flange inside the equipment.

Band Marking
A continuous circumferential band applied to a wire at regular intervals for identification.

Bare Conductor
A conductor not covered with insulating material.

Barrel
1.) Connector barrel: The section of the terminal, splice, or contact that accommodates the stripped conductor.
2.) Insulation barrel: The section of the terminal, splice, or contact that accommodates the conductor insulation.
3.) Open barrel: The section of a cap that accommodates the conductor.

Batch Number
See Lot Number.

Bayonet Coupling
A quick-coupling device for plug and receptacle connectors. Mating is accomplished by rotation of the two parts under pressure.

Beaming
Crosslinking by means of high-energy electrons.

Binder
A spiral wrapping of a thread to hold together the members of a cable.

Blocking
The sticking together of insulated wires; usually caused by heat.

Body
A protective covering of resilient material over any portion of a cable, wire termination, or termination assembly in addition to normal jacketing of insulation, to prevent entry of moisture. Also, a form for holding potting compound.

Bonding Temperature
Temperature above which adhesive melts and flows sufficiently to form an adhesive bond between substrates.

Braid
A woven metallic or fiber layer applied over wire or cable to act as a protective barrier or shielding.

Braid Angle
The angle between the braid strands and the axis of the cable.

Breakdown Voltage
The voltage at which an insulator or dielectric fails to maintain the applied voltage.

Breakout
A region in a harness assembly where a wire or a group of wires is detached to form a separate, terminated branch. Also known as a transition.

Brittle Temperature
The temperature below which a material becomes brittle, often measured by a cold impact test.

Bunch Stranding
A method of twisting individual strands to form a finished stranded conductor. Specifically, a number of strands twisted together in a common direction and with a uniform pitch (or twist) per inch.

Bus
A communal circuit over which data or power is transmitted.

Cable
Two or more wires in a twisted or parallel configuration. Also, a shielded wire.

Cable Clamp
A mechanical clamp attached to the cable side of a termination assembly to support the cable or wire bundle. It provides strain relief and absorbs vibration and shock that would otherwise be transmitted by the cable terminations.

Cable Clamp Adapter
A mechanical adapter that attaches to the rear of a termination assembly to allow the attachment of a cable clamp.

Cable Sealing Clamp
A device consisting of a gland nut designed to seal around the jacket of a cable.

Cabler
A machine that mechanically assembles a group of insulated wires.

Catalog 1654025
Revised 3-13
www.te.com

Dimensions are shown for reference purposes only. Specifications subject to change.
Dimensions are in millimeters unless otherwise specified.
USA: +1 800 522 6752
Asia Pacific: +86 0 400 820 6015
UK: +44 800 267 666
For additional support numbers please visit www.te.com

Glossary (Continued)

Cabling
The act of twisting together two or more insulated components to form a cable.

Capacitance
The ability of an insulation to store electrical energy. This is a function of the permitivity (dielectric constant) of the insulation. Usually expressed in pico farads/foot for a cable.

Carrier
A group of strands or ends used to form a finished braid.

Characteristic Impedance
The impedance of a transmission line that is independent of length. Also, the ratio of voltage to current at any point along a transmission line on which there are no standing waves.

Chemical Resistance
The ability of an insulation to withstand the presence of materials—such as acids, bases, water, salt water, and fuels—that can deteriorate the insulation, or that, if penetrable to the conductor, can cause dielectric loss of insulating qualities.

Cheminax Cables
Rgistered trade name for coaxial cables.

Circuit
The interconnection of a number of electrical elements or parts to accomplish a desired function.

Clocking
The arrangement of connector inserts, jackscrews, polarizing pins, sockets, keys/keyways, or housing configurations to prevent the mismating or cross-mating of connectors. See also Polarization.

CMA (Circular Mil Area)
The unit for expressing the cross-sectional area of a conductor. Equal to the diameter of a conductor strand (expressed in mils) squared, times the number of strands.

Coax
See Coaxial Cable.

Coaxial Cable
A cable composed of two insulated conductors—such as a conductor and a shield—whose center axis is the same. Usually this term applies only to cable used in electronic signal circuits.

Cold Bend
A test conducted by wrapping tubing or cable around a mandrel or by bending it in an arc while at a low temperature.

Cold Flow
Permanent deformation of polymeric materials (insulation) at ambient temperature due to mechanical force or pressure (not due to heat softening).

Cold Impact
A test performed by subjecting a component to a specified impact during exposure to low temperature. It measures the brittleness of the material.

Cold Joint
A soldered joint made with insufficient heat. (Solder hasn't completely flowed and wet the substrate.)

Color Code
A means of identifying cable components using solid colors or stripes. Also, the scheme that assigns a number from 0 to 9 for each of 10 colors.

Color Stability
The time and temperature ranges within which the color of a material will remain within the specified color limit.

Component
A wire or cable that is combined with other wires or cables to make a multicomponent cable.

Compound
An insulating or jacketing material made by formulating polymeric materials and additives.

Compound Under Strands (CUS)
A problem that occurs when loose stranding, or overheating during extrusion, allows compounds to get under individual strands of conductor.

Concentric Stranding
A method of stranding conductor. Specifically, the final conductor is built up in layers so that the inner diameter of a succeeding layer is always equal to the outer diameter of the underlying layer.

Concentricity
Ratio (expressed as a percentage) of the thinnest to the heaviest wall thickness. Measured on expanded or recovered tubing, or wire insulation, or jacketing.

Conductivity
The capability of a material to carry electrical current, usually expressed as a percentage of copper conductivity (copper being 100%). Specifically, the ratio of the current flow to the potential difference causing the flow. The reciprocal of resistance.

Conductor
The metallic strand or strands used to carry an electric current.

Conductor Resistance
The resistance to flow of the electrical current along a conductor. Expressed in ohms/1000 feet. (Usually referenced to 20°C [68°F]).

Conduit
A tubular raceway for holding wires or cables.

Configuration
Arrangement of contacts in a multiple-contact connector.

Connector
A device used to physically and electrically connect two or more conductors.

Connector Classes
Categories based on shape, function, and smallest-size contact in a series.

Connector Insert
In connectors with metal shells, the part that holds contacts in proper arrangement while electrically insulating them from each other and from the shell.

Contact
The element in a connector that makes the actual electrical connection. Also the parts of a connector that actually carry the electrical current, and are touched together or separated to control the flow.

Contact Crimp
A contact whose rear portion is a hollow cylinder that accepts the conductor. A crimping tool is applied to swage or form the contact metal firmly against the conductor. Sometimes referred to as a solderless contact.

Contact Resistance
The direct-current resistance of a pair of mated contacts.

Contact Size
The diameter of the engagement end of a pin contact; also related to the current-carrying capacity of a contact.

Continuity
A continuous path for the flow of current in an electrical circuit.

Continuous Operating Temperature
Maximum temperature at which a component will maintain an acceptable lifetime performance, based on accelerated aging prediction.

Catalog 1654025
Revised 3-13

www.te.com

Dimensions are shown for reference purposes only. Specifications subject to change.

Dimensions are in millimeters unless otherwise specified.

USA: +1 800 522 6752
Asia Pacific: +86 0 400 820 6015
UK: +44 800 267 666

For additional support numbers please visit www.te.com

Glossary (Continued)

Continuous Service
Conditions (time, temperature, environment) that describe the lifetime requirements of a component.

Core
1.) In cables, a component or assembly of components over which additional components, such as a shield or a sheath, are applied.
2.) Inner wall of dual-wall heat-shrinkable tubing.

Coupling Ring
The portion of a plug that aids in the mating and demating of a plug and receptacle and holds the plug to the receptacle.

Cover, Electrical Connector
An item specifically designed to cover the mating end of a connector for mechanical and/or environmental protection. Also known as a dust cover.

Coverage
A calculated percentage that defines the completeness with which a braid or shield covers the surface of the underlying insulated conductor or conductors.

Crimp
Final configuration of a terminal barrel formed by the compression of the terminal barrel and conductor.

Crimping Die
Portion of the crimping tool that shapes the crimp.

Crimping Tool
Mechanism used for crimping.

Crosslinking
The formation of bonds between molecular chains in a polymer by means of chemical catalyzation or electron bombardment. The properties of the resulting thermosetting material are usually improved.

Crosslinking by Irradiation
A method of crosslinking polymers that makes a non-flowing material. This generally improves the properties of the polymer.

Crosstalk
Signal interference between adjacent conductors caused by a transfer of energy.

Crystallinity
The portion of polymer chains that are ordered in a regular (as opposed to amorphous) structure or a crystal lattice. Crystallinity tends to improve mechanical properties and fluid resistance. Crystalline or semicrystalline materials have a well-defined melting point (shrink temperature) at which the structure becomes disordered and the polymer flows.

CSA (Canadian Standards Association)
An agency that has developed standard specifications for products with particular emphasis on safety in the end use.

Curing
See Thermoset.

Current
A movement or flow of electrons. Also, the measure of this flow, expressed in amperes.

Current-carrying Capacity
The maximum current an insulated conductor is capable of carrying without exceeding its insulation- and /or jacket-temperature limitations under specified ambient conditions. Also known as ampacity.

Current Rating
The maximum continuous electrical flow of current for which a device is designed to conduct for a specified time at a specified operation temperature. Usually expressed in amperes.

Cutout
The hole, usually round or rectangular, cut into a metal panel in order to mount a connector. The cutout may also include holes for mounting screws or bolts.

Cut-through Resistance
Resistance of solid material to penetration by an object (typically a closely controlled knife edge) under conditions of pressure, temperature, and other elements.

Dielectric
Any insulating material between two conductors that permits electrostatic attraction and repulsion to take place across it. A material having electrical insulating properties.

Dielectric Breakdown
The voltage required to cause an electrical failure or breakthrough of the insulation. Determined by a destructive test. See also Breakdown Voltage.

Dielectric Constant (also K)
The ratio of the capacitance between two electrodes with a solid, liquid, or gaseous dielectric, to the capacitance with air between the electrodes. Also called permitivity and specific inductive capacity. Generally low values are desirable for insulation.

Dielectric Strength
The maximum voltage a dielectric can withstand without rupture. Usually expressed as volts per mil.

Dielectric Withstand Voltage (DWV)
A test voltage for a wire, cable, or insulation.

Direct Current Resistance (DCR)
The resistance offered by any circuit to the flow of direct current.

Direction of Lay
The lateral direction in which the strands or elements of a cable run over the top of the cable as they recede from the observer. Expressed as right-hand or left-hand lay.

Discontinuity
A broken connection, or the loss of a specific connection characteristic. Also, the temporary interruption or variation in current or voltage.

Dissipation Factor
The ratio between the permitivity and the conductivity of a dielectric.

Drain Wire
In a cable, an uninsulated conductor laid over the component, or components, in a foil-shield cable. Used as a ground connection.

Dust Cover
See Cover, Electrical Connector.

EID
See See Expanded ID.

Elastic Memory
The ability of a crosslinked polymer to be deformed to some predetermined shape, hold that shape for a period, and then return to its original shape upon the application of heat.

Elastomer
A material that exhibits very low or zero crystallinity and a high degree of flexibility (rubber is a synonym).

Elongation
The ultimate elongation, or elongation at rupture. Expressed as a percentage of original length.

EMI
Abbreviation for electromagnetic interference.

Catalog 1654025
Revised 3-13
www.te.com

Dimensions are shown for reference purposes only. Specifications subject to change.
Dimensions are in millimeters unless otherwise specified.
USA: +1 800 522 6752
Asia Pacific: +86 0 400 820 6015
UK: +44 800 267 666
For additional support numbers please visit www.te.com

Glossary (Continued)

Encapsulant
Description related to the way dual-wall tubing products and precoated molded parts melt and flow when heated, filling any void in the area being covered. Unlike an adhesive, an encapsulant does not form a mechanical bond to the substrate.

Encapsulation
Covering and sealing.

End
The number of fibers or strands per carrier in braiding operations.

Environmentally Sealed
Description of a system to keep out moisture, dirt, air, or dust that might reduce performance.

Epoxy
A family of thermosetting resins usually used as adhesives or encapsulants.

ETFE (Ethylenetetrafluoroethylene)
A fluoropolymer used as base resin for SPEC 55 wire and HCTE.

Expanded ID (EID)
The specified minimum (as supplied) internal diameter of tubing.

Expansion Ratio
An expression of how much larger the inside diameter of a tubing is before shrinking. Specifically, the relationship of the minimum (expanded) inside diameter of tubing to the maximum (recovered) inside diameter, expressed as a ratio. See also Shrink Ratio.

Extraction Tool
A tool used for removing contacts from a connector body.

Extrusion
A process that conveys plastic insulation material, generally via a screw, through forming dies and subsequently cools the insulation material to form a predetermined shape.

Feedthru (feedthrough)
A bushing in a wall or bulkhead with terminations on one or both sides.

Filler
A material used in a cable construction to fill large interstices, thus providing a round construction; can be shaped, round, or in mastic forms. A nonfunctional member used in a cable to provide a more circular cross section.

Flame-resistant
A descriptor applied to a material that is inherently resistant to burning.

Flame Retardant
A descriptor applied to a material that has been made or treated so as to resist burning.

Flat Braid
A braided shield composed of flat strands.

Flat Cable
A cable with each component in a single, flat plane.

Flat Conductor
A conductor having a rectangular cross section, as opposed to a round or square cross section.

Flex Life
A measure of the susceptibility of a conductor or other device to failure due to fatigue from repeated bending.

Fluoropolymer
A polymer that contains atoms of fluorine.

Flux
A liquid or solid that, when heated, exercises a cleaning and protective action upon surfaces.
Used to promote or facilitate fusion during soldering or welding.

Front Release Contacts
Connector contacts that are released from the front side of the connector and then removed from the back, wire side of the connector.

Full Recovery Temperature, Minimum
See Recovery Temperature.

Gauge
A term used to denote the physical size of a wire. See also AWG.

Grounding Conductor
A conductor that provides a current return path from an electrical device to ground.

Hardness
A general term that correlates with strength, rigidity, and resistance to abrasion or penetration. Measured on Shore or Rockwell scales. See also Shore.

Harness
A system providing electrical connection between two or more points.

Heat Aging
A test that subjects components or materials to temperatures above normal operating values to evaluate changes in performance in order to predict service life. See also Accelerated Aging.

Heat Shock
A test to determine the stability of a material by continuously exposing it to an extremely high temperature for a short period of time. The test was developed both to demonstrate that the material is crosslinked and to observe any problems in dripping, cracking, or flowing.

Heat-Shrinkable Material
A polymeric material capable of being reduced in size when exposed to heat.

Hertz (Hz)
A measure of frequency equal to one cycle per second.

Hookup Wire and Cable
Wiring used to connect various points in electronic assemblies.

Hot-Melt Adhesive
An adhesive that becomes activated by heating. When heated, it melts, flows over the substrate surface, and forms an adhesive bond. Reheating causes the adhesive to remelt.

ID (Internal Diameter)
The inside or internal diameter of a tubing.

Impedance
The total opposition that a circuit offers to the flow of alternating current or any other varying current at a particular frequency. The ohm is the unit of impedance. Admittance is the reciprocal of impedance.

Impulse Test
A high-voltage test designed to locate pinholes in the insulation of a wire or cable by applying a voltage while the wire or cable is being drawn through an electrode.

Insert Cavity (Connector)
A defined hole in the connector insert into which the contacts are inserted.

Insert
Meltable thermoplastic ring placed within a SolderSleeve device. Aids in encapsulation and sealing.

Insert (Connector)
Part that holds the contacts in their proper arrangement and electrically insulates them from each other and from the shell.

Insert Arrangement (Connector)
The number, spacing, and arrangement of contacts in a termination assembly.

Catalog 1654025
Revised 3-13

www.te.com

Dimensions are shown for reference purposes only. Specifications subject to change.

Dimensions are in millimeters unless otherwise specified.

USA: +1 800 522 6752
Asia Pacific: +86 0 400 820 6015
UK: +44 800 267 666

For additional support numbers please visit www.te.com

Glossary (Continued)

Insertion Tool (Connector)
A tool used to insert removable contacts into a connector.

Inspection Hole
A hole placed at one end of a contact barrel to permit visual inspection, to ensure that the conductor has been inserted to the proper depth in the barrel prior to crimping or soldering.

Insulated Terminal
A solderless terminal with an insulated sleeve over the barrel to prevent a short circuit in certain installations.

Insulation, Electrical
A nonconductive material usually surrounding or separating two conductive materials. Often called the dielectric in cables designed for high-frequency use.

Insulation, Thermal
A nonconductive material that prevents the passage of heat.

Insulation Resistance
Minimum electrical resistance permitted between any pair of contacts and between conductors and grounding devices of the same connectors in various combinations. An indication of the insulating properties of a material.

Interconnection
The joining of one individual device with another.

Interstice
In a cable construction, the space or void left between or around the cabled components.

Irradiation
In insulations, the exposure of the material to high-energy emissions for the purpose of favorably altering the molecular structure via crosslinking.

TEFLON is a trademark of E.I. du Pont de Nemours and Company

Jackscrew
A screw attached to one half of a two-piece, multiple-contact connector and used to draw both halves together and to separate them.

Jacket
1.) A material covering over a wire or cable assembly.
2.) Outer covering of a dual-wall heat-shrinkable tubing.

Kapton
DuPont's trade name for polyimide film.

Key (Connector)
A short pin or other projection that slides into a mating slot or groove to guide two parts being assembled.

Keying (Connector)
Mechanical arrangement of guide pins and sockets, keying plugs, contacts, bosses, slots, keyways, inserts, or grooves in a connector housing, shell or insert that allows connectors of the same size and type to be lined up; used in situations where there is danger of making a wrong connection.

Keyway
The slot or groove in which a key slides.

kV (Kilovolt)
A unit equal to 1000 volts.

Kynar
Trade name (of Atofina Chemicals, Inc.) for polyvinylidene fluoride and its copolymers.

Lacing Cord or Twine
Used for lacing and tying cable forms, hookup wires, cable ends, cable bundles, and wire harness assemblies. Available in various materials and impregnants.

Lanyard
A device, attached to certain quick-disconnect connectors, that permits uncoupling and separation of connector halves by a pull on a wire or cable.

Lay
Refers to direction or sometimes the ratio of lay length to core diameter.

Lay Length
A term used in cable manufacturing to denote the distance of advance of one member, or a group of spirally twisted members in one turn, measured axially. The lay of any helical element of a cable or conductor is the axial length of a turn of the helix of that element.

Life Cycle
A test to determine the length of time before failure in a controlled, usually accelerated environment.

Liner
See Core.

Longitudinal Change (Shrink Tubing)
The change in length of tubing when recovered. Expressed in the percent of change from the original length.

Loss
Electrical energy that is dissipated as heat.

Loss Factor
The product of the power factor and dielectric constant of an insulating material.

Lot Number
The number that identifies one production run of material. Also known as a batch number.

Low-loss Dielectric
An insulating material that has a relatively low dielectric loss, such as polyethylene or Teflon®.

Lug
A termination, usually crimped or soldered to a conductor, that allows connection to be made with a retaining screw.

Marking
A printed identification number or symbol applied to the surface of a wire or cable.

Mate (Connections)
To join connector halves in a normal engaging mode.

Megarad
A unit for measuring radiation dosage.

Melt/Flow Index
Measurement of the flow of thermoplastic material under given conditions of temperature and pressure. Expressed as grams per unit of time.

Melting Point
The temperature at which crystallinity disappears when crystalline material is heated.

Mil
A unit equal to one one-thousandth of an inch (.001"); used in measuring the diameter of a conductor or thickness of insulation over a conductor.

MIL-SPEC
Abbreviation for Military Specification, which is a document the U.S. Government issues to define a product that will be used in military end-use applications.

Milking Off
Action that occurs when the inner layer (the encapsulant or adhesive) of the tubing or molded part acts as a lubricant, allowing the tubing to slip off the substrate (because the tubing wants to recover to a smaller diameter).

Catalog 1654025
Revised 3-13

www.te.com

Dimensions are shown for reference purposes only. Specifications subject to change.

Dimensions are in millimeters unless otherwise specified.

USA: +1 800 522 6752
Asia Pacific: +86 0 400 820 6015
UK: +44 800 267 666

For additional support numbers please visit www.te.com

Glossary (Continued)

Minimum Full Recovery Temperature
See Recovery Temperature.

MO (Manufacturing Order)
A series of operation-work-order cards identifying materials to be used and the type and quantity of products to be manufactured. An MO is controlled and issued by Production Control to the manufacturing operation.

MOD Code (Material Modification Code)
A code designating a particular stage in the production process. Most MOD codes describe the way the product is packaged.

MS (Manufacturing Specification)
A set of process instructions used in the manufacturing of tubing products. Customer Logistics, Product Management, or Manufacturing Engineering initiate the MS; Manufacturing Engineering controls it. The product design and quality parameters are provided to Manufacturing Engineering by Product Development and Quality Assurance. Successful trial runs of a new product or design usually precede the initiation of an MS (see SMO). A proprietary document, an MS is not available to customers.

Multiconductor
More than one component within a single-cable complex.

Multiple-Conductor Cable
A combination of two or more components cabled together.

Nick
A small cut or notch in conductor strands or insulation.

Nominal
A descriptor applied to a dimension representing the center of the range of tolerance or a value if no tolerance is applied.

OFT (Optional Flame Test)
Canadian Standards Association's test for flame-retardance. Tubing with an OFT rating is highly flame-retardant.

Ohm
The unit of electrical resistance.

Operating Temperature
The maximum internal temperature at which a system, harness, or connector may operate in continuous service; generally expressed as a time and temperature.

Operating Temperature Range
The range between the maximum and the minimum internal temperature of insulation in a system, harness, or connector in continuous service. The lower limit is determined by low-temperature flex test.

Optional Flame Test
See OFT.

Packaging
The process of physically locating, connecting, and protecting devices or components.

Panel
The side or front (usually metal) of a piece of equipment on which connectors are mounted.

Panel-mount
Method of fixing one-half of a connector to a board, panel, or frame. Usually, the female half of the connector is the mounted portion and the male half is the removable portion.

PC (Production Control)
Group responsible for directing and regulating the movement of goods through the entire manufacturing cycle, from the requisitioning of raw materials to the delivery of the finished products.

PCN
See RPN.

Peripheral Seal
A seal provided around the periphery of connector inserts to prevent the ingress of fluids or contaminants at the perimeter of mated connectors.

Permittivity
See Dielectric Constant.

Pick
The number of crossovers of braiding units per inch of cable.

Pigtail
A short conductor or wire extending from an electrical or electronic device to serve as a jumper or ground connection.

Pin Contact
An electrical terminal, usually in a connector. Normally a smaller termination than a lug.

Plastic Deformation
Change in dimensions under a load that does not recover when the load is removed.

Plasticizer
A softener or lubricant added to a compound to make it easier to process or more flexible in use.

Plating
The overlaying of a thin coating of metal on metallic components to improve conductivity, facilitate soldering, or prevent corrosion.

Plug
The part of a connector that is normally "removable" from the other, permanently mounted part; usually that half of a two-piece connector that contains the pin contacts.

Plug Connector
An electrical connector that is intended to be attached to the free end of a conductor, wire, cable, or bundle, and that couples or mates to a receptacle connector.

Poke Through
A term describing stray wires in a solder joint that poke through the insulation.

Polarization (Connectors)
A mechanical arrangement of inserts or the shell configuration (referred to as clocking in some instances) that prohibits the mating of mismatched plugs and receptacles. See also Clocking.

Polyamide
A polymer formed by the reaction of a diamine and a diacid. Nylons are commercial polyamides characterized by toughness, solvent resistance, and sharp melting point.

Polymer
A material of high molecular weight formed by the chemical union of monomers.

Polyolefin
A family of polymers (such as polyethylene and polypropylene) made from olefin monomers.

Potting
The permanent sealing of the cable end of a connector with a compound or material that thermosets into an elastomer, to exclude moisture and/or to provide strain relief.

Pre-etching
The act of surface preparation before encapsulating.

Pretinned
Description of an electrical component to which solder has been applied prior to soldering.

Pretinned Solder Cup
Solder cup whose inner surfaces have been precoated

Glossary (Continued)

with a small amount of solder.

Preform
Usually, the solder ring in a SolderSleeve device.

Primary Insulation
The inner member of a dual-wall wire insulation. The insulation applied directly on the conductor. Also referred to as the core. See also Core.

Push-back
That property of a braid or shield that allows the braid or shield to be pushed back easily along the cable core.

PVC (Polyvinyl chloride)
A polymer compound used as wire insulation.

PVDF
Polyvinylidene fluoride.

Quality Assurance
Systematic, planned, and documented activities designed to provide confidence that a product will meet specifications.

Quality Control
Activities that monitor, measure, and control the characteristics of a material, component, or product to documented specifications.

Quick Disconnect
A type of connector shell that permits rapid locking and unlocking of two connector halves.

RA Flux
Rosin-activated flux.

Radiation Crosslinking
The act of crosslinking a material with ionizing radiation. (Most TE products are radiation crosslinked, with an electron beam as the form of ionizing radiation.) See also Crosslinking by Irradiation.

Rated Temperature
The maximum temperature at which a component can operate for extended periods with acceptable changes in its basic properties.

Rated Voltage
The maximum voltage at which an electric component can operate for extended periods without undue degradation.

Rear Release Contacts
Connector contacts designed to be released and removed from the rear (wire side) of the connector. The removal tool engages the contact from the rear and pulls the contact out of the connector contact retainer.

Receptacle
Usually the fixed or stationary half of a two-piece multiple contact connector. Also the connector half usually mounted on a panel and containing socket contacts.

Recover (Heat-shrinkable Components)
Activation of the elastic memory principle (usually with heat) to cause a tubing or molded part to return to its original size.

Recovered ID (RID)
In heat-shrink tubing, the guaranteed maximum internal diameter of tubing after being freely recovered.

Recovery Temperature
The minimum temperature required to fully shrink a product, that is, for the product to recover completely.

Removable Contact
A contact that can be mechanically joined to or removed from an insert. Usually special tools are required to lock the contact in place or remove it for repair or replacement.

Resistance
A measure of the difficulty in moving electrical current through a conductor or insulation when a voltage is applied. It is measured in ohms.

Ribbon Cable
Flat cable with conductors that have been individually insulated together. Its structure is usually characterized by individual colors of insulation for each conductor, although a single color may be used for all conductors.

RID
See Recovered ID.

RMA Flux
Rosin-mildly-activated flux.

Rope Lay
A type of conductor lay that uses stranded conductors as components to build a larger conductor.

RPN (Raychem Product Number)
A 10-digit number (such as 123456-4-001) assigned to every standard product and every product manufactured on a special manufacturing order (SMO). The first 6 digits represent the PCN (Product Control Number), followed by a 1-digit MOD Code, and finally a 3-digit suffix. See also MOD Code and SMO.

RT and RW specifications
Specification that describes standard product properties. Qualification and acceptance inspection criteria are incorporated into RT and RW specifications. RT and RW specifications are issued and controlled by the Specifications Group.

SCD (Specification Control Drawing)
Drawing that defines configuration and material parameters. Issued and controlled by the specifications group, SCDs are frequently used in conjunction with RT Specifications for Thermofit products.

Scoop-proof
A feature that prevents the damage of contacts during misaligned mating.

Sealant
Soft, tacky, pliable material that seals where mechanical strength is not required.

Sealed
Environmentally protected by the thermoplastic inserts or core of encapsulant/adhesive that has melted down around the substrate.

Sealing Plug
A plug that is inserted to fill an unoccupied contact aperture in a termination assembly.

Secant Modulus
A measure of material stiffness; stiffer material has a higher secant modulus. More specifically, the secant modulus is the ratio of stress (nominal) to corresponding strain at any specified point on the stress-strain curve.It is expressed in force per unit area (usually kilograms per square centimeters or pounds per square inch), and reported together with the specified stress or strain.

Service Life
Period of time during which the product is expected to perform satisfactorily.

Service Loop
The extra cable required at a breakout to facilitate maintenance and servicing.

Service Rating
The maximum voltage or current that a termination is designed to carry continuously.

Shelf Life
Generally, the length of time a product or material may be stored without deterioration. Specifically, the length of time during which shrink tubing will retain its expand-

Catalog 1654025
Revised 3-13

www.te.com

Dimensions are shown for reference purposes only. Specifications subject to change.

Dimensions are in millimeters unless otherwise specified.

USA: +1 800 522 6752
Asia Pacific: +86 0 400 820 6015
UK: +44 800 267 666

For additional support numbers please visit www.te.com

Glossary (Continued)

ed ID and return to its recovered ID. Usually not a concern—except for some "amnesic" materials. See Amnesia.

Shell (Connector)
The outside case, usually metallic, into which the insert (body) and contacts are assembled. Shells of mating connector halves usually provide for proper alignment and polarization as well as for protection of projecting contacts.

Shield
A conducting layer placed around an insulated conductor or cable to limit the penetration, or escape, of electric or electromagnetic fields, thereby preventing electromagnetic interference. The shield may be formed of metallic braid, metal tape, metal-backed foil, metal tube, or conductive polymer. Usually grounded, the shielding is carried through the connector shell, or through a special internal shell in the case of individual coaxial contacts.

Shielding
See Shield.

Shielding Effectiveness (SE)
The reduction in field strength resulting from interposing a metallic barrier between a source and receptor of electromagnetic energy.

Shore
A scale for comparing hardness. Higher Shore values represent harder materials. The hardness of a polymer, for example, is usually represented as Shore A or Shore D, with D being harder.

Shrink Ratio
An expression of how much the inside diameter of shrink tubing will reduce in size when recovered. The inverse of the expansion ratio. See also Expansion Ratio.

Shrink Temperature, Minimum
The minimum temperature at which a product begins to recover.

Signal Cable
A cable designed to carry current of less than 12 amperes per conductor.

Skew
Any out-of-squareness of the cut end of a piece of tubing after shrinking.

SMO (Special Manufacturing Order)
An order to evaluate manufacturing and production capability for a new or changed design for a customer and to provide development samples of potential products for customers. SMO products are separate and distinct from standard products. New, potential products are usually run as SMO products for a minimum of three times before being considered for manufacture as a standard product.

Solder
An alloy that melts at relatively low temperatures and is used to join metals with higher melt points.

Solder Contact
A contact or terminal having a cup, hollow cylinder, eyelet, or hook to accept a wire for a conventional soldered termination.

Solder Cup
A tubular end of a terminal into which a wire conductor is inserted prior to being soldered.

Solderability
The property of a metal surface that allows it to be readily wetted by molten solder. See also Wetting.

Soldering
A process of joining metallic surfaces with solder without melting the base metal.

SolderSleeve Device
A device of flux-coated solder preform encapsulated in a heat-recoverable plastic sleeve. Upon the application of heat, the flux and solder will melt and flow as the sleeve recovers, forcing the solder around and onto the metallic parts being joined, thus forming an electrically insulated and strain-relieved joint.

Solid Conductor
A conductor composed of one single strand.

Solvent Resistance
The ability of a material to retain physical and electrical properties after being immersed in specific solvents.

SPC
Silver-plated copper.

SPC (Statistical Process Control)
The use of statistical techniques such as control charts to analyze a process or its output so as to take appropriate actions to achieve and maintain a state of control and to improve the capability of the process.

Specific Gravity
The ratio of the density (mass per unit volume) of a material to that of water.

Specific Inductive Capacity
See Dielectric Constant.

Splice
A joint connecting conductors with good mechanical strength and conductivity; a terminal that permanently joins two or more wires.

Strain Relief
The technique for or act of removing or lessening the strain or stress on a joint, splice, or termination. SolderSleeve devices provide strain relief.

Strain Relief Clamp
See Cable Clamp.

Strand
A single unit of a conductor.

Stranded Conductor
A conductor composed of more than one single strand. The strands in stranded conductors are usually twisted or braided together.

Strip
To remove insulation from a wire or cable.

Stripe
A continuous longitudinal or spiral color strip applied on the surface of a wire, cable, or tubing for identification.

Substrate
The material—such as a wire, post, or tab—over which an interconnection device is used.

Surface Resistance
The ratio of the direct current applied to an insulation system to the current that passes across the surface of the system.

Tape Wrap
A term denoting a spirally or longitudinally applied tape material wrapped around insulated or uninsulated wire and used as a mechanical barrier.

TC
Tinned copper.

Tear Test
A test to determine the tear strength of an insulating material. Usually includes exposure to given thermal conditions or a programmed series of conditions for prescribed periods of time.

Catalog 1654025
Revised 3-13

www.te.com

Dimensions are shown for reference purposes only. Specifications subject to change.

Dimensions are in millimeters unless otherwise specified.

USA: +1 800 522 6752
Asia Pacific: +86 0 400 820 6015
UK: +44 800 267 666

For additional support numbers please visit www.te.com

Glossary (Continued)

Temperature Rating
The maximum temperature at which the insulating material may be used in continuous operation without loss of its basic properties. Usually time dependent.

Tensile Strength
The pull stress (in force per unit area) required to break a given specimen.

Thermal Rating
The effect of heat or cold applied at such a rate that nonuniform thermal expansion or contraction occurs within a given material or combination of materials. In electrical terminations, the effect can cause inserts and other insulation material to pull away from the metal parts.

Thermal Shock
The effect of high and low temperatures applied at a rapid rate such that nonuniform thermal expansion or contraction occurs within a given material or combination of materials. The result could be stress-cracking or -shattering of material.

Thermochromic Indicator
Special compound that changes color when the proper wetting temperature has been reached in the solder joint.

Thermoplastic
A material that softens (melts and flows) when heated and becomes firm when cooled. A type of plastic that can be remelted a number of times without any important change in properties. Nylon, GE's Lexan, and PVC—examples of this type of plastic—are resilient after molding.

Thermoset
A material that hardens or sets when heated and, once set, cannot be resoftened by heating. This application of heat is called "curing."

Thermosetting Plastic
A type of plastic in which an irreversible chemical reaction takes place while the plastic is being molded under heat and pressure.

Thermosetting Adhesive
A curing adhesive that requires heat to promote curing. This type of plastic will not soften when reheated. See Epoxy.

Tolerance
The total amount by which a quantity is allowed to vary from nominal; thus, the tolerance is half the algebraic difference between the maximum and minimum limits.

Traceability
The ability to trace the history, application, or location of an item and like items or activities by means of recorded identification. The lot number/manufacturing order (MO) number, or SMO number used to identify items or groups of items is traceable back to inspection and procurement records.

Transmission Cable
Two or more transmission lines. If the structure is flat, it is sometimes called flat transmission cable to differentiate it from a round structure such as a jacketed group of coaxial cables. See also Transmission Line.

Transmission Line
A signal-carrying circuit with controlled electrical characteristics; used to transmit high-frequency or narrow-pulse signals.

Triaxial Cable
A concentrically constructed cable, with a common axis, composed of a center connector, first shield, and second shield, all insulated from each other.

UL (Underwriters' Laboratories)
A nonprofit independent testing organization that operates a listing service for electrical and electronic materials and equipment.

Ultraviolet Degradation
The degradation caused by long-time exposure of a material to sunlight or other ultraviolet rays.

Velocity of Propagation
The ratio of the speed of a radio frequency wave within a cable or dielectric as compared with the same wave in free space.

Voltage
The term most often used in place of electromotive force, potential, potential difference, or voltage drop to designate the electric pressure that exists between two points and that is capable of producing a current when a closed circuit is connected between the two points.

Voltage Breakdown
The voltage necessary to cause insulation failure.

Voltage Drop
Loss of voltage through a connection or conductor.

Voltage Rating
The voltage that may be continuously applied to wire.

Volume Resistivity
Reciprocal of conductivity; the resistance of a material to the flow of electrical current, usually expressed in ohm-cm.

VSWR (Voltage Standing Wave Ratio)
A measure of the uniformity of impedance along a transmission line, or the quality of the impedance match between a line and the source or load.

VW-1
A rating determined by the Underwriters' Laboratories' (UL) optional Vertical Wire Flame Test—the most difficult flame test for tubing. Tubings with a VW-1 rating are highly flame-retardant.

Wall Thickness
The thickness of the applied insulation or jacket.

Water Absorption Test
A method to determine the water uptake of a material. It is time and temperature dependent.

Water Blocking
The sticking together of insulated wires; usually caused by heat.

Wetting (Solder)
The formation of a relatively uniform, smooth, unbroken, and adherent film of solder to a base metal. Also, the free flow of solder alloy, with proper application of heat and flux, on a metallic surface to produce an adherent bond.

Wicking
The longitudinal flow of a liquid in a wire or cable construction due to capillary action. (This may also apply to solder.)

Wire
A single conductor covered with insulation.

Wire Dress
The orderly arrangement of wires and laced harnesses.

Withstanding Voltage
The test voltage an electrical connector can withstand for one minute without showing evidence of electrical breakdown when the voltage is applied between conductors and grounding devices of the connectors in various combinations.

Catalog 1654025
Revised 3-13

www.te.com

Dimensions are shown for reference purposes only. Specifications subject to change.

Dimensions are in millimeters unless otherwise specified.

USA: +1 800 522 6752
Asia Pacific: +86 0 400 820 6015
UK: +44 800 267 666

For additional support numbers please visit www.te.com

Part Index

Product or Part Number	Page Number
-3 Material	4-25, 4-84
-4 Material	4-27
-12 Material	4-29, 4-84
-25 Material	4-31, 4-84
-25S Material	4-33
-50 Material	4-35
-51 Material	4-37
-55 Material	4-39
-71 Material	4-41
-100 Material	4-43, 4-84
-100S Material	4-45
-125 Material	4-47
-770 Material	4-49
-780 Material	4-52
-790 Material	4-55
0022E0311	9-78
0024A0024	9-78
0026A0024	9-78
007510-000	10-17
022611-000	10-14
026239-000	10-33
047011-000	10-4
047143-000	10-23
049857-000	10-31
065583-000	10-8
071965-000	10-27
072845-000	10-10
074131-000	10-25
100-A-*	9-29
100A0111-10-*, -12, -14, -16, -18, -20, -22, -24	9-28
100-G-*	9-31
100G0111-0.40-*	9-32
100G0111-0.50-*	9-32
100G0111-0.60-*	9-32
100G0111-0.75-*	9-32
100G0111-1.00-*	9-32
100G0111-1.20-*	9-32
100G0111-1.50-*	9-32
100G0111-2.00-*	9-32
100G0111-2.50-*	9-32
100G0111-3.00-*	9-32
100G0111-4.00-*	9-32
101A011	4-58
101A011 to 094	4-58
101A021	4-58
101A031	4-58
101A041	4-58
101A062	4-58
101A083	4-58
101A094	4-58
10595-24	9-78
10606-26	9-78
10612, 10613, 10614	8-84
10612-24	9-78
10613-24	9-78

Product or Part Number	Page Number
10613-9	8-105
10613-96	8-105
10614-24	9-78
106503-000	10-20
112676-000	10-16
118902-000	10-17
132692-000	10-21
139128-000	10-21
168927-000	10-6
170224-000	10-8
173643-000	10-8
176247-000	10-20
180245-000	10-8
200˚ MiniSeal Crimp Splices	8-28 to 8-29
202A111	4-62, 4-86
202A111 to 196	4-62
202A121	4-62
202A132	4-62
202A142	4-62
202A153	4-62
202A163	4-62
202A174	4-62
202A185	4-62
202A196	4-62
202C611	4-21,4-23, 4-63, 6-31, 6-33, 6-36, 6-39, 6-41, 6-51, 6-53, 6-55, 6-59, 6-61, 6-63, 6-67, 6-71, 6-74, 6-76
202C621	4-21,4-23, 4-63, 6-31, 6-33, 6-36, 6-39, 6-38, 6-41 6-51, 6-53, 6-55, 6-59, 6-60, 6-61, 6-63, 6-67, 6-68, 6-69, 6-71, 6-74, 6-76
202C632	4-21, 4-23, 4-63, 6-31, 6-33, 6-36, 6-38,6-39, 6-41, 6-46, 6-51, 6-52, 6-53, 6-55, 6-59, 6-60, 6-61, 6-63, 6-67, 6-68, 6-69, 6-71, 6-74, 6-76
202C642	4-21, 4-23, 4-63, 6-31, 6-33, 6-36, 6-38, 6-39, 6-41, 6-46, 6-51, 6-52, 6-53, 6-55, 6-59, 6-60, 6-61, 6-63, 6-67, 6-68, 6-69, 6-71, 6-74, 6-76
202C653	4-21, 4-23, 4-63, 6-31, 6-33, 6-36, 6-38, 6-39,6-41, 6-46, 6-51, 6-52, 6-53, 6-55. 6-59, 6-60, 6-61, 6-63, 6-68, 6-69, 6-71, 6-74, 6-76, 6-67
202C663	4-21, 4-63, 6-31, 6-33, 6-41, 6-51, 6-55, 6-59, 6-63, 6-67, 6-71, 6-76
202D121	4-22, 4-64
202D132	4-22, 4-64
202D142	4-22, 4-64
202D153	4-22, 4-64
202D163	4-22- 4-64
202D174	4-22- 4-64
202D185	4-22, 4-64
202D196	4-22, 4-64
202D211	4-22, 4-65, 6-31, 6-33, 6-36, 6-39, 6-53, 6-55, 6-59, 6-61, 6-63, 6-67, 6-69, 6-71, 6-74, 6-76
202D211/202F211	4-23

Product or Part Number	Page Number
202D221	4-22, 4-65, 6-33, 6-36, 6-38, 6-39, 6-52, 6-53, 6-55, 6-59, 6-60, 6-61, 6-63, 6-67, 6-68, 6-69, 6-71 6-74, 6-76
202D232	4-22, 4-65, 6-31, 6-33, 6-36, 6-39, 6-39, 6-46, 6-52, 6-53, 6-55, 6-59, 6-60, 6-61, 6-63, 6-67, 6-68, 6-69, 6-71, 6-74, 6-76
202D242	4-22, 4-65, 6-31, 6-33, 6-36, 6-38, 6-39, 6-46, 6-52, 6-53, 6-55, 6-59, 6-60, 6-61, 6-63, 6-67, 6-68, 6-69, 6-71, 6-74, 6-76
202D253	4-22, 4-65, 6-31, 6-33, 6-36, 6-38, 6-39, 6-46, 6-52, 6-53, 6-55, 6-59, 6-60, 6-61, 6-63, 6-67, 6-68, 6-69, 6-71, 6-75, 6-76
202D263	4-22, 4-65, 6-31, 6-33, 6-36, 6-38, 6-39, 6-46, 6-52, 6-53, 6-55, 6-59, 6-60, 6-61, 6-63, 6-67, 6-68, 6-69, 6-71, 6-74, 6-76
202D274	4-22, 4-65, 6-31, 6-33, 6-74
202D285	4-22, 4-65, 6-31
202D296	4-22,4-65, 6-31
202D299	4-22, 4-65, 6-31
202D921	4-66
202D923	4-66
202D953	4-66
202D963	4-66
202F211	4-21, 4-67
202F221	4-21, 4-67
202F232	4-21, 4-67
202F242	4-21, 4-67
202F253	4-21. 4-67
202F263	4-21, 4-67
202F274	4-21, 4-67
202G211	4-68
202G221	4-21, 4-68
202G232	4-21, 4-68
202G242	4-21, 4-68
202G253	4-21, 4-69
202G621	4-21, 4-69
202G632	4-21, 4-69
202G642	4-21, 4-69
202G653	4-21, 4-69
202K111	4-86
202K121	4-22, 4-70, 6-31, 6-33, 6-36, 6-39, 6-41, 6-51, 6-53, 6-55, 6-59, 6-61, 6-63, 6-67, 6-69, 6-71, 6-74, 6-76
202K132	4-22, 4-70, 6-31, 6-33, 6-38, 6-39, 6-41, 6-51, 6-52, 6-53, 6-55, 6-59, 6-60, 6-61, 6-63, 6-67, 6-68, 6-71, 6-74, 6-76
202K142	4-22, 4-70, 6-31, 6-33, 6-38, 6-39, 6-41, 6-46, 6-51, 6-52, 6-53, 6-55, 6-59, 6-60, 6-61, 6-63, 6-67, 6-68, 6-71, 6-74, 6-76
202K153	4-22, 4-70, 6-31, 6-33, 6-36, 6-38, 6-39, 6-41, 6-46, 6-51, 6-52, 6-53, 6-55, 6-59, 6-60, 6-61, 6-63, 6-67, 6-68, 6-71, 6-74, 6-76

Part Index (Continued)

Product or Part Number	Page Number
202K163	4-22, 4-70, 6-31, 6-33, 6-36,6-38, 6-39, 6-41, 6-46, 6-51, 6-52, 6-53, 6-55, 6-59, 6-60, 6-61, 6-63, 6-67, 6-68, 6-71, 6-74, 6-76
202K174	4-22, 4-70, 6-31, 6-33, 6-36, 6-38, 6-39, 6-41, 6-46, 6-51, 6-52, 6-53, 6-55, 6-59, 6-60, 6-61, 6-63, 6-67, 6-68, 6-71, 6-74, 6-76
202K185	4-22, 4-70, 6-31, 6-33, 6-36, 6-38, 6-39, 6-41, 6-46, 6-51, 6-52, 6-53, 6-55, 6-59, 6-60, 6-61, 6-63, 6-67, 6-68, 6-71, 6-74, 6-76
202K232	6-36, 6-41, 6-51, 6-44, 6-59, 6-63, 6-67, 6-71, 6-74, 6-76
202S174	4-64
202W232	6-31, 6-33, 6-36, 6-39, 6-41, 6-51, 6-53, 6-55, 6-61, 6-63, 6-69, 6-71, 6-76
202W302	4-109
202W312	4-109
202W321	4-109
202W331	4-109
202W342	4-109
203W301	4-85
204W201	4-85
204W221	4-86
207W213	4-88
207W223	4-88
207W234	4-88
207W245	4-88
207W256	4-88
214A011	4-71
214A021	4-71
214A032	4-71
214A042	4-71
214A052	4-71
214A311	4-72
214A321	4-72
214A332	4-72
214A342	4-72
214A352	4-72
222899-000	10-10
222A111	4-73
222A121	4-73
222A132	4-73
222A142	4-73
222A152	4-73
222A163	4-73
222A174	4-73
222A185	4-73
222A196	4-73
222D121	4-22, 4-74
222D132	4-22, 4-74
222D142	4-22, 4-74
222D152	4-74
222D153	4-22
222D163	4-22, 4-74
222D174	4-22, 4-74
222D185	4-22, 4-74
222D196	4-22, 4-74
222D211	4-22, 4-75, 6-31, 6-33, 6-39, 6-53, 6-55, 6-59, 6-61, 6-67, 6-69, 6-71, 6-74, 6-76
222D221	6-36
222D221	4-22, 4-75, 6-36, 6-31, 6-33, 6-38, 6-39, 6-52, 6-53, 6-55, 6-59, 6-60, 6-61, 6-67, 6-68, 6-69, 6-71, 6-74, 6-76
222D232	4-22, 4-75, 6-31, 6-33, 6-36, 6-39, 6-46, 6-52, 6-53, 6-55, 6-59, 6-60, 6-61, 6-67, 6-68, 6-69, 6-71,6-74, 6-76
222D242	4-22, 4-75, 6-31, 6-33, 6-36, 6-38, 6-39, 6-46, 6-52, 6-53, 6-55, 6-59, 6-60, 6-61, 6-67, 6-68, 6-69, 6-71,6-74, 6-76
222D253	4-22, 4-75, 6-31, 6-33, 6-36, 6-38, 6-39, 6-46, 6-52, 6-53, 6-55, 6-59, 6-60, 6-61, 6-67, 6-68, 6-69, 6-71,6-74, 6-76
222D263	4-22, 4-75, 6-31, 6-33, 6-36, 6-38, 6-39, 6-46, 6-52, 6-53, 6-55, 6-59, 6-60, 6-61, 6-67, 6-68, 6-69, 6-71,6-74, 6-76
222D274	4-23, 4-22, 4-75, 6-31, 6-33, 6-36, 6-74
222D285	4-22, 4-23, 4-75, 6-31
222D296	4-22, 4-75, 6-31
222D299	4-22, 4-75, 6-31
222D632	6-74
222D921	4-76
222D932	4-76
222D953	4-76
222D963	4-76
222F211	4-21, 4-77
222F221	4-21, 4-77
222F232	4-21, 4-77
222F242	4-21, 4-77
222F253	4-21, 4-77
222F263	4-21, 4-77
222F274	4-21, 4-77
222F285	4-21, 4-77
222K121	4-22, 4-78, 6-31, 6-33, 6-36, 6-39, 6-53, 6-55, 6-59, 6-61, 6-63, 6-67, 6-69, 6-71, 6-74, 6-76
222K132	4-22, 4-78, 6-31, 6-38, 6-36, 6-39, 6-52, 6-53, 6-55, 6-59, 6-60, 6-61, 6-63, 6-67, 6-69, 6-68, 6-71, 6-74, 6-76
222K142	4-22, 4-78, 6-31, 6-33, 6-38, 6-36, 6-39, 6-52, 6-53, 6-55, 6-59, 6-60, 6-61, 6-63, 6-67, 6-69, 6-68, 6-71, 6-74, 6-76
222K152	4-78, 6-31, 6-33, 6-36, 6-38, 6-39, 6-52, 6-53, 6-55, 6-59, 6-60, 6-61, 6-63, 6-67, 6-68, 6-69, 6-71, 6-74, 6-76
222K153	4-22, 6-55
222K163	4-22, 4-78, 6-31, 6-38, 6-36, 6-39, 6-52, 6-53, 6-55, 6-59, 6-60, 6-61, 6-63, 6-67, 6-69, 6-68, 6-69, 6-71, 6-74, 6-76
222K174	4-22, 4-78, 6-31, 6-33, 6-38, 6-36, 6-39, 6-52, 6-53, 6-55, 6-59, 6-60, 6-61, 6-63, 6-67, 6-69, 6-68, 6-69, 6-71, 6-74, 6-76
222K185	4-22, 4-78, 6-31, 6-33, 6-36, 6-53, 6-55, 6-59, 6-63, 6-67, 6-69, 6-68, 6-69, 6-71, 6-74, 6-76
222K232	6-38
223W601	4-87
224W201	4-87
224W221	4-87
231866-000	10-12
234A011	4-79
234A021	4-79
234A032	4-79
234A042	4-79
234A052	4-79
234A061	4-79
234A071	4-79
234A111	4-80
234A121	4-80
234A132	4-80
234A142	4-80
234A152	4-80
234A111	4-81
234A621	4-81
234A632	4-81
234A642	4-81
234A652	4-81
234A661	4-81
234A671	4-81
242W042	4-82
242W063	4-82
2524H0524	9-80
2526H0524	9-80
2530A0314	9-80
277774-000	10-20
281917-000	10-2
289588-000	10-16
299155-000	10-6
301A011	4-93
301A022	4-93
301A028	4-93
301A034	4-93
301A048	4-93
301A511	4-94
301A512	4-94
301A513	4-94
301A514	4-94
332A112	4-95
332A123	4-95
332A134	4-95
332A148	4-95
332A158	4-95

Catalog 1654025
Revised 3-13

www.te.com

Dimensions are shown for reference purposes only. Specifications subject to change.

Dimensions are in millimeters unless otherwise specified.

USA: +1 800 522 6752
Asia Pacific: +86 0 400 820 6015
UK: +44 800 267 666

For additional support numbers please visit www.te.com

Part Index (Continued)

Product or Part Number	Page Number
338605-000	10-20
340970-000	10-12
342A012	4-96
342A024	4-96
342A034	4-96
342A048	4-96
342A058	4-96
3439-01-173-8810	10-2
362A014	4-97
362A024	4-97
362A114	4-97
381A301	4-98
381A302	4-98
381A303	4-98
381A304	4-98
382A012	4-99
382A023	4-99
382A034	4-99
382A046	4-99
382C312	4-100
382C312, 322 and 332	4-100
382C322	4-100
385828-000	10-12
389363-000	10-33
392A012 to 046	4-99
395241-000	10-3
400W242	4-110
411993-000	10-8, 10-10
413186-000	10-3
431468-000	10-20
434366-000	10-12
44-*	9-6
441753-000	10-12
444817-000	10-14
44A011X, 012X, 021X, 031X, 081X	9-8
44A111X, 112X, 121X, 181X	9-9
462047-000	10-33
462A011	4-101
462A011 to 060	4-101
462A023	4-101
462A034	4-101
462A046	4-101
462A060	4-101
462A421	4-102
462A422	4-102
462A423	4-102
462A424	4-102
481321-000	10-20
4940-00-148-9847	10-2
4940-00-148-9848	10-2
4940-00-609-4993	10-2
4940-01-043-7634	10-2
5012A3311	8-68
5012E1339	8-68
5012E1339	9-75
5012M1612	9-75

Product or Part Number	Page Number
5019D3318	8-68
5020A1311	8-68
5022M1809	9-82
5022M5809	9-82
5022W0809	9-82
5022W1809	9-82
5024A1311	8-68, 9-75
5024A13XX	8-56
5024A1661	9-78
5026A1664	9-78
5026D1027	9-75
5028A1317	8-68
5028A13XX	8-56
5030A1317	8-68, 9-75
5030A13XX	8-56
5030A1424	9-75
524325-000	10-21
529600-000	10-17
538361-000	10-12
547918-000	10-20
55*01X1-AWG-Y	9-19
55*01X2-AWG-Y	9-19
55*01X3-AWG-Y	9-19
55*01X4-AWG-Y	9-19
55*01X6-AWG-Y	9-19
55*08X1-AWG-Y	9-19
55*08X2-AWG-Y	9-19
55*08X3-AWG-Y	9-19
55*08X4-AWG-Y	9-19
55*08X6-AWG-Y	9-19
55*11X1-AWG-Y	9-19
55*11X2-AWG-Y	9-19
55*11X3-AWG-Y	9-19
55*11X4-AWG-Y	9-19
55*11X6-AWG-Y	9-19
55*-18X1-AWG-Y	9-19
55*-18X2-AWG-Y	9-19
55*-18X3-AWG-Y	9-19
55*-18X4-AWG-Y	9-19
55*-18X6-AWG-Y	9-19
55*21X1-AWG-Y	9-19
55*21X2-AWG-Y	9-19
55*21X3-AWG-Y	9-19
55*21X4-AWG-Y	9-19
55*21X6-AWG-Y	9-19
55*-28X1-AWG-Y	9-19
55*-28X2-AWG-Y	9-19
55*-28X3-AWG-Y	9-19
55*-28X4-AWG-Y	9-19
55*-28X6-AWG-Y	9-19
55*41X1-AWG-Y	9-19
55*41X2-AWG-Y	9-19
55*41X3-AWG-Y	9-19
55*41X4-AWG-Y	9-19
55*41X6-AWG-Y	9-19
55*48X1-AWG-Y	9-19

Product or Part Number	Page Number
55*48X2-AWG-Y	9-19
55*48X3-AWG-Y	9-19
55*48X4-AWG-Y	9-19
55*48X6-AWG-Y	9-19
55/-Outer Space	9-16
554196-000	10-16
55A-*	9-15
55A0111	9-18
55A0112	9-18
55A0113	9-18
55A0114	9-18
55A0116	9-18
55A011X	9-13
55A012X	9-13
55A0211	9-18
55A0212	9-18
55A0213	9-18
55A0214	9-18
55A0216	9-18
55A0711	9-18
55A0712	9-18
55A0713	9-18
55A0714	9-18
55A0716	9-18
55A0811	9-18
55A0812	9-18
55A0813	9-18
55A0814	9-18
55A0816	9-18
55A081X	9-13
55A082X	9-13
55A111X	9-13
55A112X	9-13
55A181X	9-13
55A182X	9-13
55A6169	9-64
55A8002	9-64
55A8131	9-64
55FA0511	9-72
55FA0514-10*	9-67
55FA0514-12*	9-67
55FA0514-14*	9-67
55FA0514-16*	9-67
55FA0514-18*	9-67
55FA0514-20*	9-67
55FA0514-22*	9-67
55FA0514-24*	9-67
55FA0521-14*	9-68
55FA0521-16*	9-68
55FA0521-18*	9-68
55FA0521-20*	9-68
55FA0521-22*	9-68
55FA0524-24*	9-68
55FA0531-14*	9-68
55FA0531-16*	9-68
55FA0531-18*	9-68

Catalog 1654025
Revised 3-13

www.te.com

Dimensions are shown for reference purposes only. Specifications subject to change.

Dimensions are in millimeters unless otherwise specified.

USA: +1 800 522 6752
Asia Pacific: +86 0 400 820 6015
UK: +44 800 267 666

For additional support numbers please visit www.te.com

Part Index (Continued)

Product or Part Number	Page Number
55FA0531-20*	9-68
55FA0531-22*	9-68
55FA0534-24*	9-68
55FA0541-14*	9-68
55FA0541-16*	9-68
55FA0541-18*	9-68
55FA0541-20*	9-68
55FA0541-22*	9-68
55FA0544-24*	9-68
55FA0551-14*	9-68
55FA0551-16*	9-68
55FA0551-18*	9-68
55FA0551-20*	9-68
55FA0551-22*	9-68
55FA0554-24*	9-68
55FAB1511	9-72
55FAF0512-10*	9-67
55FAF0512-12*	9-67
55FAF0512-14*	9-67
55FAF0512-16*	9-67
55FAF0512-18*	9-67
55FAF0512-20*	9-67
55FAF0512-22*	9-67
55FAF0522-14*	9-69
55FAF0522-16*	9-69
55FAF0522-18*	9-69
55FAF0522-20*	9-69
55FAF0522-22*	9-69
55FAF0532-14*	9-69
55FAF0532-16*	9-69
55FAF0532-18*	9-69
55FAF0532-20*	9-69
55FAF0532-22*	9-69
55FAF0542-14*	9-69
55FAF0542-16*	9-69
55FAF0542-18*	9-69
55FAF0542-20*	9-69
55FAF0542-22*	9-69
55FAF0552-14*	9-69
55FAF0552-16*	9-69
55FAF0552-18*	9-69
55FAF0552-20*	9-69
55FAF0552-22*	9-69
55FAF7128-24*	9-67
55FAF7134-24*	9-69
55FAF7135-24*	9-69
55FAF7136-24*	9-69
55FAF7137-24*	9-69
55FB1511-10*	9-70
55FB1511-12*	9-70
55FB1511-14*	9-70
55FB1511-16*	9-70
55FB1511-18*	9-70
55FB1511-20*	9-70
55FB1511-22*	9-70
55FB1514-24*	9-70

Product or Part Number	Page Number
55FB1521-14*	9-70
55FB1521-16*	9-70
55FB1521-18*	9-70
55FB1521-20*	9-70
55FB1521-22*	9-70
55FB1524-24*	9-70
55FB1531-14*	9-70
55FB1531-16*	9-70
55FB1531-18*	9-70
55FB1531-20*	9-70
55FB1531-22*	9-70
55FB1534-24*	9-70
55FB1541-14*	9-70
55FB1541-16*	9-70
55FB1541-18*	9-70
55FB1541-20*	9-70
55FB1541-22*	9-70
55FB1544-24*	9-70
55FB1551-14*	9-70
55FB1551-16*	9-70
55FB1551-18*	9-70
55FB1551-20*	9-70
55FB1551-22*	9-70
55FB1554-24*	9-70
55FB7129-*	9-71
55FBF2512-10*	9-71
55FBF2512-12*	9-71
55FBF2512-14*	9-71
55FBF2512-16*	9-71
55FBF2512-18*	9-71
55FBF2512-20*	9-71
55FBF2512-22*	9-71
55FBF2522-14*	9-71
55FBF2522-16*	9-71
55FBF2522-18*	9-71
55FBF2522-20*	9-71
55FBF2522-22*	9-71
55FBF2532-14*	9-71
55FBF2532-16*	9-71
55FBF2532-18*	9-71
55FBF2532-20*	9-71
55FBF2532-22*	9-71
55FBF2542-14*	9-71
55FBF2542-16*	9-71
55FBF2542-18*	9-71
55FBF2542-20*	9-71
55FBF2542-22*	9-71
55FBF2552-14*	9-71
55FBF2552-16*	9-71
55FBF2552-18*	9-71
55FBF2552-20*	9-71
55FBF2552-22*	9-71
55FBF7130-*	9-71
55FBF7131-*	9-71
55FBF7132-*	9-71
55FBF7133-*	9-71

Product or Part Number	Page Number
55LF-*	9-15
55PC	9-12
55PC-*	9-17
55PC021X	9-14
55PC022X	9-14
55PC121X	9-14
55PC122X	9-14
55PLF-*	9-17
562A011	4-103
562A022	4-103
562A032	4-103
562A043	4-103
562A054	4-103
562A067	4-103
574557-000	10-8
582602-000	10-2
584313-000	10-23
584781-000	10-21
585643-000	10-20
588701-000	10-20
619690-000	10-21
629602-000	10-16
6S100-200 FR	4-107
704393-000	10-27
714529-000	10-25
727799-000	10-10
740331-000	10-31
747235-000	10-8
747525-000	10-20
7518A1311	8-68
7520A1311	9-75
7520A1662	9-78
7522A1311	8-68
7523D1331	8-68
7524A1311	8-68
7526A13XX	8-56
7526J1660	9-78
7528A1317	8-68
7528H1424	9-75
7530A1317	8-68
7530A13XX	8-56
7530H1424	9-75
755928-000	10-21
773898-000	10-12
7820D0331	9-78
7824E0422	9-78
795257-000	10-8
81-*	9-22
813914-000	10-12
82-*	9-22
827429-000	10-23
832011-000	10-14
839218-000	10-12
843800-000	10-31
859855-000	10-8
879865-000	10-20

Catalog 1654025
Revised 3-13

www.te.com

Dimensions are shown for reference purposes only. Specifications subject to change.

Dimensions are in millimeters unless otherwise specified.

USA: +1 800 522 6752
Asia Pacific: +86 0 400 820 6015
UK: +44 800 267 666

For additional support numbers please visit www.te.com

Part Index (Continued)

Product or Part Number	Page Number
8S14-50 FR	4-107
8S23-75 FR	4-107
8S42-100 FR	4-107
926935-000	10-33
927079-000	10-10
928826-000	10-12
930321-000	10-14
94375-000	10-17
9522A1311	9-75
9524A1311	8-68
9527A1318	8-68
9527A13XX	8-56
9527J1528	9-75
9528A13XX	8-56
9530A13XX	8-56
9530E1014	8-68, 9-75
955018-000	10-29
958770-000	10-12
966953-000	10-20
981721-000	10-31
985426-000	10-12
988204-000	10-20
988208-000	10-20
988285-000	10-20
988299-000	10-20
988300-000	10-20
988301-000	10-20
988303-000	10-20
988314-000	10-20
988328-000	10-20
988382-000	10-20
988596-000	10-20
989172-000	10-12
991017-000	10-33
991018-000	10-33
991026-000	10-33
991027-000	10-33
992008-000	10-4
992013-000	10-4
993020-000	10-17
993693-000	10-17
993695-000	10-17
993702-000	10-8
993770-000	10-17
993850-000	10-3
993872-000	10-3
993877-000	10-3
993917-000	10-3
993938-000	10-3
994350-00	10-17
994590-000	10-17
9951119-000	10-8
99-M-*	9-26
99M011X, 1111, 1121	9-24
A22932-000	10-14
A23120-000	10-14

Product or Part Number	Page Number
A42716-000	10-12
A93538-000	10-14
A96930-000	10-31
AA-400 Super Heater Tool	10-2
AD-1319-9 Holding Fixture Tool	10-3
AD-1377	10-4
AD-1381	8-22, 10-4
AD-1386	10-4
AD-1522	10-4
AD-1962	5-5
AD-3050-SEAL-TEST-EQUIP	10-5, 10-6
AD-500 Tinel-Lock tool	10-7
AD-5000 Tinel-ASSY (240v)	6-85
AD-5010 Tinel Bench	10-9, 10-10
Adhesives	5-1
ADK Rectangular Backshells	2-3
AFR 35-1.5	9-117
AFR 35-10	9-117
AFR 35-120	9-117
AFR 35-150	9-117
AFR 35-16	9-117
AFR 35-185	9-117
AFR 35-2.5	9-117
AFR 35-240	9-117
AFR 35-25	9-117
AFR 35-300	9-117
AFR 35-35	9-117
AFR 35-4	9-117
AFR 35-400	9-117
AFR 35-50	9-117
AFR 35-6	9-117
AFR 35-70	9-117
AFR 35-95	9-117
AMPLIMITE Rectangular Connectors	2-3
ARINC Connectors	6-79
ATUM Tubing	3-11
B-020-20-N	8-56
B-020-22-N	8-56
B-020-24-N	8-56
B-020-26-N	8-56
B-021-26-N	8-56
B02X/B04X	8-55
B-040-20-N	8-56
B-040-24-N	8-56
B-040-26-N	8-56
B-040-28-N	8-56
B-040-30-N	8-56
B-041-24-N	8-56
B-041-26-N	8-56
B-041-28-N	8-56
B-041-30-N	8-56
B-043-24-N	8-56
B-043-26-N	8-56
B-043-28-N	8-56
B-043-30-N	8-56
B-044-22-N	8-56

Product or Part Number	Page Number
B-044-24-N	8-56
B-044-26-N	8-56
B-046	8-57
B-105-1802	8-33
B-106-1401	8-33
B-106-1402	8-33
B-106-1403	8-33
B-106-1501	8-33
B-106-1502	8-33
B-106-1503	8-33
B-106-1601	8-33
B-106-1602	8-33
B-106-1801	8-33
B-106-1803	8-33
B-106-1991	8-33
B-106-1992	8-33
B-106-1993	8-33
B-106-2401	8-32
B-106-2402	8-32
B-106-2403	8-32
B-106-2502	8-32
B-106-2503	8-32
B-106-3281	8-34
B-106-3481	8-34
B-106-3631	8-34
B-106-3632	8-34
B-106-3633	8-34
B-106-4631	8-34
B-106-4632	8-34
B-106-7401	8-35
B-106-7502	8-35
B-106-8401	8-35
B-106-8502	8-35
B-155	8-6, 8-48, 8-55
B-155-03-35-22-5	8-49
B-155-05-35-22-5	8-49
B-155-06-35-22-5	8-49
B-155-07-35-22-5	8-49
B-155-09-35-22-5	8-49
B-155-11	8-49
B-155-11-35-22-5	8-49
B-155-13	8-49
B-155-13-35-22-5	8-49
B-155-1501	8-44
B-155-1502	8-44
B-155-1503	8-44
B-155-1504	8-44
B-155-1505	8-44
B-155-3, -5, -6, -7, -9	8-49
B-155-3801	8-49
B-155-3802	8-49
B-155-9001	8-7, 8-11
B-155-9002	8-7, 8-11
B-155-9003	8-7, 8-11
B-155-9004	8-7, 8-11
B-155-9005	8-7, 8-11

Dimensions are shown for reference purposes only. Specifications subject to change.

Dimensions are in millimeters unless otherwise specified.

USA: +1 800 522 6752
Asia Pacific: +86 0 400 820 6015
UK: +44 800 267 666

For additional support numbers please visit www.te.com

Part Index (Continued)

Product or Part Number	Page Number
Band Straps	9-93
Bayonet Triaxial Connectors	8-102
BND-0812S	6-27
BND-1225S	6-27
BSTS Tubing	3-13
BSTS-03, -04, -07, -11, -13, -15, -17, -20, -27, -30, -35, -40, -45	3-14
BSTS-FR Tubing	3-13
C-110	8-6
C203	8-20
C-203-01, -02, -03	8-20
C66438-000	10-17
C82893-000	10-6
C99451-000	10-14
CEC-RWC-18600	9-80
CEC-RWC-18634	9-85
CEC-RWC-18658	9-86
CEC-RWC-18664	9-85
CEC-RWC-18665	9-86
CEC-RWC-18666	9-85
CEC-RWC-18680	9-87
CEC-RWC-18681	9-87
CEC-RWC-18682	9-87
CEC-RWC-18684	9-87
CEC-RWC-18685	9-87
CEC-RWC-18686	9-87
CEC-RWC-18687	9-86
CEC-RWC-18700	9-80
CEC-RWC-18709	9-80
CEC-RWC-18710	9-80
CEC-RWC-18886	9-80
CEC-RWC-18982	9-80
CEC-RWC-18983	9-80
CEC-RWC-19043	9-80
CEC-RWC-19172	9-80
CEC-RWC-20333	9-85
CEC-RWC-20412	9-88
CEC-RWC-20555	9-85
CEC-RWC-20638	9-88
CEC-RWC-20837	9-88
CEC-RWC-21064	9-88
CEC-RWC-21088	9-88
CeeLok FAS-T Connector	9-93
CES, CES-1	4-89
CES-1R	4-92
CES-2	4-89
CES-2-A100	4-91
CES-2-A50	4-91
CES-2-A75	4-91
CES-2A-D1	4-91
CES-2A-F1, -F2	4-91
CES-2A-T1, -T2, -T3	4-91
CES-2-D1A	4-89
CES-2-F1A	4-89
CES-2F-A50	4-92
CES-2F-A75	4-92

Product or Part Number	Page Number
CES-2R	4-92
CES-2-T1	4-89
CES-2-T1B	4-89
CES-3	4-89
CES-3-A100	4-91
CES-3-A150	4-91
CES-3A-D1	4-91
CES-3A-D2	4-91
CES-3A-F1	4-91
CES-3A-F2	4-91
CES-3-D1	4-89
CES-3-F1	4-89
CES-3R	4-92
CES-3R-A100	4-92
CES-3R-A150	4-92
CES-3-T1	4-89
CES-4	4-89
CES-4-A150	4-91
CES-4A-D3	4-91
CES-4A-F3	4-91
CES-4A-T3	4-91
CES-4-D3	4-89
CES-4-F1	4-89
CES-4R	4-92
CES-4S	4-89
CES-4-T1	4-89
CES-5	4-89
CES-5-A250	4-91
CES-5-F4	4-89
CF0024-000	10-20
CF0025-000	10-20
CF0026-000	10-21
CF0199-000	10-21
CF0200-000	10-21
CF0201-000	10-21
CF5497-000	10-20
CGPE-105 Tubing	3-15
CGPT Tubing	3-17
Cheminax Coaxial Cables	9-73 to 9-76
Cheminax Twin Axial Cable	9-77 to 9-78
CJ2085-000	10-14
CJ2086-000	10-14
CJ2087-000	10-14
CL 105-10x0.5-PF	9-39
CL 105-10x0.75-PF	9-39
CL 105-10x1.0-PF	9-39
CL 105-10x1.5-PF	9-39
CL 105-10x2x0.5-PI	9-41
CL 105-10x2x0.5-PIO	9-45
CL 105-10x2x0.5-PO	9-43
CL 105-10x2x0.75-PI	9-41
CL 105-10x2x0.75-PIO	9-45
CL 105-10x2x0.75-PO	9-43
CL 105-10x2x1.0-PI	9-41
CL 105-10x2x1.0-PIO	9-45
CL 105-10x2x1.0-PO	9-43

Product or Part Number	Page Number
CL 105-10x2x1.5-PI	9-41
CL 105-10x2x1.5-PIO	9-45
CL 105-10x2x1.5-PO	9-43
CL 105-10x3x0.75-TF	9-39
CL 105-10x3x0.75-TI	9-41
CL 105-10x3x0.75-TIO	9-45
CL 105-10x3x0.75-TO	9-43
CL 105-12x0.5-SO	9-37
CL 105-12x0.5-SU	9-35
CL 105-12x0.75-SO	9-37
CL 105-12x0.75-SU	9-35
CL 105-12x1.0-SO	9-37
CL 105-12x1.0-SU	9-35
CL 105-12x1.5-SO	9-37
CL 105-12x1.5-SU	9-35
CL 105-12x2.5-SO	9-37
CL 105-12x2.5-SU	9-35
CL 105-14x0.5-PF	9-39
CL 105-14x0.75-PF	9-39
CL 105-14x1.0-PF	9-39
CL 105-14x1.5-PF	9-39
CL 105-14x1.5-SO	9-37
CL 105-14x1.5-SU	9-35
CL 105-14x2x0.5-PI	9-41
CL 105-14x2x0.5-PIO	9-45
CL 105-14x2x0.5-PO	9-43
CL 105-14x2x0.75-PI	9-41
CL 105-14x2x0.75-PIO	9-45
CL 105-14x2x0.75-PO	9-43
CL 105-14x2x1.0-PI	9-41
CL 105-14x2x1.0-PIO	9-45
CL 105-14x2x1.0-PO	9-43
CL 105-14x2x1.5-PI	9-41
CL 105-14x2x1.5-PIO	9-45
CL 105-14x2x1.5-PO	9-43
CL 105-15x3x0.75-TF	9-39
CL 105-15x3x0.75-TI	9-41
CL 105-15x3x0.75-TIO	9-45
CL 105-15x3x0.75-TO	9-43
CL 105-19x0.5-PF	9-39
CL 105-19x0.5-SO	9-37
CL 105-19x0.5-SU	9-35
CL 105-19x0.75-PF	9-39
CL 105-19x0.75-SO	9-37
CL 105-19x0.75-SU	9-35
CL 105-19x1.0-PF	9-39
CL 105-19x1.0-SO	9-37
CL 105-19x1.0-SU	9-35
CL 105-19x1.5-PF	9-39
CL 105-19x1.5-SO	9-37
CL 105-19x1.5-SU	9-35
CL 105-19x2.5-SO	9-37
CL 105-19x2.5-SU	9-35
CL 105-19x2x0.5-PI	9-41
CL 105-19x2x0.5-PIO	9-45
CL 105-19x2x0.5-PO	9-43

Part Index (Continued)

Product or Part Number	Page Number
CL 105-19x2x0.75-PI	9-41
CL 105-19x2x0.75-PIO	9-45
CL 105-19x2x0.75-PO	9-43
CL 105-19x2x1.0-PI	9-41
CL 105-19x2x1.0-PIO	9-45
CL 105-19x2x1.0-PO	9-43
CL 105-19x2x1.5-PI	9-41
CL 105-19x2x1.5-PIO	9-45
CL 105-19x2x1.5-PO	9-43
CL 105-1x2x0.5-PI	9-41
CL 105-1x2x0.5-PIO	9-45
CL 105-1x2x0.5-PO	9-43
CL 105-1x2x0.75-PI	9-41
CL 105-1x2x0.75-PIO	9-45
CL 105-1x2x0.75-PO	9-43
CL 105-1x2x1.0-PI	9-41
CL 105-1x2x1.0-PIO	9-45
CL 105-1x2x1.0-PO	9-43
CL 105-1x2x1.5-PI	9-41
CL 105-1x2x1.5-PIO	9-45
CL 105-1x2x1.5-PO	9-43
CL 105-1x3x0.75-TI	9-41
CL 105-1x3x0.75-TIO	9-45
CL 105-1x3x0.75-TO	9-43
CL 105-1x3x1.5-TI	9-41
CL 105-1x3x1.5-TIO	9-45
CL 105-1x3x1.5-TO	9-43
CL 105-24x0.5-PF	9-39
CL 105-24x0.75-PF	9-39
CL 105-24x1.0-PF	9-39
CL 105-24x1.5-PF	9-39
CL 105-24x1.5-SO	9-37
CL 105-24x1.5-SU	9-35
CL 105-24x2x0.5-PI	9-41
CL 105-24x2x0.5-PIO	9-45
CL 105-24x2x0.5-PO	9-43
CL 105-24x2x0.75-PI	9-41
CL 105-24x2x0.75-PIO	9-45
CL 105-24x2x0.75-PO	9-43
CL 105-24x2x1.0-PI	9-41
CL 105-24x2x1.0-PIO	9-45
CL 105-24x2x1.0-PO	9-43
CL 105-24x2x1.5-PI	9-41
CL 105-24x2x1.5-PIO	9-45
CL 105-24x2x1.5-PO	9-43
CL 105-27x0.5-SO	9-37
CL 105-27x0.5-SU	9-35
CL 105-27x0.75-SO	9-37
CL 105-27x0.75-SU	9-35
CL 105-27x1.0-SO	9-37
CL 105-27x1.0-SU	9-35
CL 105-27x1.5-SO	9-37
CL 105-27x1.5-SU	9-35
CL 105-27x2.5-SO	9-37
CL 105-27x2.5-SU	9-35
CL 105-2Bx0.5-SO	9-37
CL 105-2Bx0.5-SU	9-35
CL 105-2Bx0.75-SO	9-37
CL 105-2Bx0.75-SU	9-35
CL 105-2Bx1.0-SO	9-37
CL 105-2Bx1.0-SU	9-35
CL 105-2Bx1.5-SO	9-37
CL 105-2Bx1.5-SU	9-35
CL 105-2Bx2.5-SO	9-37
CL 105-2Bx2.5-SU	9-35
CL 105-2x0.5-PF	9-39
CL 105-2x0.5-SO	9-37
CL 105-2x0.5-SU	9-35
CL 105-2x0.75-PF	9-39
CL 105-2x0.75-SO	9-37
CL 105-2x0.75-SU	9-35
CL 105-2x1.0-PF	9-39
CL 105-2x1.0-SO	9-37
CL 105-2x1.0-SU	9-35
CL 105-2x1.5-PF	9-39
CL 105-2x1.5-SO	9-37
CL 105-2x1.5-SU	9-35
CL 105-2x2.5-SO	9-37
CL 105-2x2.5-SU	9-35
CL 105-2x2x0.5-PI	9-41
CL 105-2x2x0.5-PIO	9-45
CL 105-2x2x0.5-PO	9-43
CL 105-2x2x0.75-PI	9-41
CL 105-2x2x0.75-PIO	9-45
CL 105-2x2x0.75-PO	9-43
CL 105-2x2x1.0-PI	9-41
CL 105-2x2x1.0-PIO	9-45
CL 105-2x2x1.0-PO	9-43
CL 105-2x2x1.5-PI	9-41
CL 105-2x2x1.5-PIO	9-45
CL 105-2x2x1.5-PO	9-43
CL 105-2x3x0.75-TF	9-39
CL 105-2x3x0.75-TI	9-41
CL 105-2x3x0.75-TIO	9-45
CL 105-2x3x0.75-TO	9-43
CL 105-2x3x1.5-TF	9-39
CL 105-2x3x1.5-TI	9-41
CL 105-2x3x1.5-TIO	9-45
CL 105-2x3x1.5-TO	9-43
CL 105-37x0.5-PF	9-39
CL 105-37x0.75-PF	9-39
CL 105-37x1.0-PF	9-39
CL 105-37x1.5-PF	9-39
CL 105-37x1.5-SO	9-37
CL 105-37x1.5-SU	9-35
CL 105-37x2.5-SO	9-37
CL 105-37x2.5-SU	9-35
CL 105-37x2x0.5-PI	9-41
CL 105-37x2x0.5-PIO	9-45
CL 105-37x2x0.5-PO	9-43
CL 105-37x2x0.75-PI	9-41
CL 105-37x2x0.75-PIO	9-45
CL 105-37x2x0.75-PO	9-43
CL 105-37x2x1.0-PI	9-41
CL 105-37x2x1.0-PIO	9-45
CL 105-37x2x1.0-PO	9-43
CL 105-37x2x1.5-PI	9-41
CL 105-37x2x1.5-PIO	9-45
CL 105-37x2x1.5-PO	9-43
CL 105-3Gx0.5-SO	9-37
CL 105-3Gx0.5-SU	9-35
CL 105-3Gx0.75-SO	9-37
CL 105-3Gx0.75-SU	9-35
CL 105-3Gx1.0-SO	9-37
CL 105-3Gx1.0-SU	9-35
CL 105-3Gx1.5-SO	9-37
CL 105-3Gx1.5-SU	9-35
CL 105-3Gx2.5-SO	9-37
CL 105-3Gx2.5-SU	9-35
CL 105-3x0.5-PF	9-39
CL 105-3x0.5-SO	9-37
CL 105-3x0.5-SU	9-35
CL 105-3x0.75-PF	9-39
CL 105-3x0.75-SO	9-37
CL 105-3x0.75-SU	9-35
CL 105-3x1.0-PF	9-39
CL 105-3x1.0-SO	9-37
CL 105-3x1.0-SU	9-35
CL 105-3x1.5-PF	9-39
CL 105-3x1.5-SO	9-37
CL 105-3x1.5-SU	9-35
CL 105-3x2.5-SO	9-37
CL 105-3x2.5-SU	9-35
CL 105-3x2x0.5-PI	9-41
CL 105-3x2x0.5-PIO	9-45
CL 105-3x2x0.5-PO	9-43
CL 105-3x2x0.75-PI	9-41
CL 105-3x2x0.75-PIO	9-45
CL 105-3x2x0.75-PO	9-43
CL 105-3x2x1.0-PI	9-41
CL 105-3x2x1.0-PIO	9-45
CL 105-3x2x1.0-PO	9-43
CL 105-3x2x1.5-PI	9-41
CL 105-3x2x1.5-PIO	9-45
CL 105-3x2x1.5-PO	9-43
CL 105-4x0.5-PF	9-39
CL 105-4x0.5-SO	9-37
CL 105-4x0.5-SU	9-35
CL 105-4x0.75-PF	9-39
CL 105-4x0.75-SO	9-37
CL 105-4x0.75-SU	9-35
CL 105-4x1.0-PF	9-39
CL 105-4x1.0-SO	9-37
CL 105-4x1.0-SU	9-35
CL 105-4x1.5-PF	9-39
CL 105-4x1.5-SO	9-37
CL 105-4x1.5-SU	9-35
CL 105-4x2.5-SO	9-37

Part Index (Continued)

Product or Part Number	Page Number
CL 105-4x2.5-SU	9-35
CL 105-4x2x0.5-PI	9-41
CL 105-4x2x0.5-PIO	9-45
CL 105-4x2x0.5-PO	9-43
CL 105-4x2x0.75-PI	9-41
CL 105-4x2x0.75-PIO	9-45
CL 105-4x2x0.75-PO	9-43
CL 105-4x2x1.0-PI	9-41
CL 105-4x2x1.0-PIO	9-45
CL 105-4x2x1.0-PO	9-43
CL 105-4x2x1.5-PI	9-41
CL 105-4x2x1.5-PIO	9-45
CL 105-4x2x1.5-PO	9-43
CL 105-4x3x0.75-TF	9-39
CL 105-4x3x0.75-TI	9-41
CL 105-4x3x0.75-TIO	9-45
CL 105-4x3x0.75-TO	9-43
CL 105-4x3x1.5-TF	9-39
CL 105-4x3x1.5-TI	9-41
CL 105-4x3x1.5-TIO	9-45
CL 105-4x3x1.5-TO	9-43
CL 105-5Gx0.5-SO	9-37
CL 105-5Gx0.5-SU	9-35
CL 105-5Gx0.75-SO	9-37
CL 105-5Gx0.75-SU	9-35
CL 105-5Gx1.0-SO	9-37
CL 105-5Gx1.0-SU	9-35
CL 105-5Gx1.5-SO	9-37
CL 105-5Gx1.5-SU	9-35
CL 105-5Gx2.5-SO	9-37
CL 105-5Gx2.5-SU	9-35
CL 105-5x0.5-SO	9-37
CL 105-5x0.5-SU	9-35
CL 105-5x0.75-SO	9-37
CL 105-5x0.75-SU	9-35
CL 105-5x1.0-SO	9-37
CL 105-5x1.0-SU	9-35
CL 105-5x1.5-SO	9-37
CL 105-5x1.5-SU	9-35
CL 105-5x2.5-SO	9-37
CL 105-5x2.5-SU	9-35
CL 105-7x0.5-PF	9-39
CL 105-7x0.5-SO	9-37
CL 105-7x0.5-SU	9-35
CL 105-7x0.75-PF	9-39
CL 105-7x0.75-SO	9-37
CL 105-7x0.75-SU	9-35
CL 105-7x1.0-PF	9-39
CL 105-7x1.0-SO	9-37
CL 105-7x1.0-SU	9-35
CL 105-7x1.5-PF	9-39
CL 105-7x1.5-SO	9-37
CL 105-7x1.5-SU	9-35
CL 105-7x2.5-SO	9-37
CL 105-7x2.5-SU	9-35
CL 105-7x2x0.5-PI	9-41

Product or Part Number	Page Number
CL 105-7x2x0.5-PIO	9-45
CL 105-7x2x0.5-PO	9-43
CL 105-7x2x0.75-PI	9-41
CL 105-7x2x0.75-PIO	9-45
CL 105-7x2x0.75-PO	9-43
CL 105-7x2x1.0-PI	9-41
CL 105-7x2x1.0-PIO	9-45
CL 105-7x2x1.0-PO	9-43
CL 105-7x2x1.5-PI	9-41
CL 105-7x2x1.5-PIO	9-45
CL 105-7x2x1.5-PO	9-43
CL 105-7x3x0.75-TF	9-39
CL 105-7x3x0.75-TI	9-41
CL 105-7x3x0.75-TIO	9-45
CL 105-7x3x0.75-TO	9-43
CL 105-7x3x1.5-TF	9-39
CL 105-7x3x1.5-TI	9-41
CL 105-7x3x1.5-TIO	9-45
CL 105-7x3x1.5-TO	9-43
CL-105-*	9-49
C-Lite Cables	9-33 to 9-49
C-Lite CL 105-PF/C-Lite CL 105-TF	9-38 to 9-39
C-Lite CL 105-PI/C-Lite CL 105-TI	9-40 to 9-41
C-Lite CL 105-PIO/C-Lite CL105-TIO	9-44 to 9-45
C-Lite CL 105-PO/C-Lite CL 105-TO	9-42 to 9-43
C-Lite CL 105-SO	9-36 to 9-37
C-Lite CL 105-SU	9-34 to 9-35
C-Lite F Cables	9-50 to 9-51
Code 18 MIL-C-5015	6-28 to 6-36
Code 21 MIL-C-26482	6-37 to 6-43
Code 32 MIL-C-22992	6-44 to 6-49
Code 40 MIL-C-38999	6-50 to 6-57
Code 41 MIL-C-38999	6-58 to 6-65
Code 54 MIL-C-5015	6-66 to 6-73
Code 76 BS 9522	6-74 to 6-76
Cold Applied Splices	8-22
Computer Aided Design	9-93
CRES-Lock Bands	6-27
CRN Tubing	3-19
CTC-0012	9-64
CTC-0015	9-64
CTC-0018	9-64
CTC-0044	9-64
CTC-0057	9-64
CTC-0073	9-64
CTC-0074	9-64
CTC-0077	9-64
CTC-0078	9-64
CTC-0079	9-64
CTC-0080	9-64
CTC-0081	9-64
Custom Maintenance & Repair Kits	7-12
Custom Shipboard Cables	9-94
CV-1981 Heavy Duty Hot-Air Tool	10-11,10-12
CV-1983 Heavy Duty Hot-Air Tool	5-5, 10-11,10-12
CWT	8-6, 8-48, 8-55

Product or Part Number	Page Number
D-062—0169/0170-X	8-78
D-100-00, -31	8-53
D-101-00	8-53
D-103-00, -31	8-53
D-104-31	8-53
D-105-31	8-53
D-107-31	8-53
D-110	8-6
D-110-0062	8-45
D-110-0071	8-8
D-110-0083	8-8
D-110-0083	8-11
D-110-0090	8-8, 8-11
D-110-0101	8-8, 8-11
D-110-0181	8-8, 8-11
D-110-0213	8-8
D-110-0217	8-8, 8-45
D-110-35	8-8, 8-11
D-110-40	8-8
D-110-41	8-8, 8-11
D-128-0043	8-45
D-129-03, -05, -07, -13, -22, -30, -31, -56	8-45
D-142-50, -51, -52, -56, -65, -83	8-53
D14-30FR	4-107
D-144-00, -01, -02, -03, -04, -05	8-53
D-144-25, -26, -37, -46	8-53
D-150	8-66
D-150-0168, -0169, -0170, -0174, -0715, -0176, -0177, -0178, -0179, -0180, -0181	8-67
D-150-0708-5	8-96
D-150-9708-5	8-102, 8-104
D150-C-11	8-71
D150-C-12	8-71
D150-C-13	8-71
D150-C-14	8-71
D-1744	8-6
D-1744-01, 01, -02, -03, -04	8-9, 8-11, 8-53
D-1744-05, -06, -07, -08	8-53
D-181	8-55
D-181-1220-90/9	8-56
D-181-1222-90/9	8-56
D-181-1224-90/9	8-56
D-181-1226-90/9	8-56
D-181-1826-6/9	8-56
D-181-1830-6/9	8-56
D-181-2220-90/9	8-56
D-181-2222-90/9	8-56
D-181-2224-90/9	8-56
D-181-2226-90/9	8-56
D-181-2826-6/9	8-56
D-181-2830-6/9	8-56
D-181-3220-90/9	8-56
D-181-3222-90/9	8-56
D-181-3224-90/9	8-56
D-181-3226-90/9	8-56

Catalog 1654025
Revised 3-13

www.te.com

Dimensions are shown for reference purposes only. Specifications subject to change.

Dimensions are in millimeters unless otherwise specified.

USA: +1 800 522 6752
Asia Pacific: +86 0 400 820 6015
UK: +44 800 267 666

For additional support numbers please visit www.te.com

Part Index (Continued)

Product or Part Number	Page Number
D-181-3826-6/9	8-56
D-181-3830-6/9	8-56
D-184	8-55
D-184-1220-90/9	8-56
D-184-1222-90/9	8-56
D-184-1224-90/9	8-56
D-184-1226-90/9	8-56
D-184-2220-90/9	8-56
D-184-2222-90/9	8-56
D-184-2224-90/9	8-56
D-184-2226-90/9	8-56
D200-400-FR	4-107
D-200-82, -83, -84	8-26, 8-29
D3-9FR	4-107
D-406	8-18
D-406-0001, -0002, -0003	8-18
D-406-0034	8-18
D-436-0096	8-26
D-436-0097	8-26
D-436-0098	8-26
D-436-0110	8-26
D-436-0115	8-26
D-436-0128	8-25
D-436-36, -37, -38	8-22, 8-26
D-436-42, -43, -52, -53, -58, -59, -60, -61, -82, -83, -84, -85, -86, -87, 88, -89, -90	8-26
D-500-0255	8-91
D-500-0255-511-1	8-92
D-500-0255-512-1	8-92
D-500-0255-513-1 & -2	8-92
D-500-0255-515-1 & -2	8-92
D-500-0255-517-1 & -2	8-92
D-500-0255-521-1	8-92
D-500-0255-522-1	8-92
D-500-0255-523-1 & -2	8-92
D-500-0255-525-1 & -2	8-92
D-500-0255-527-1 & -2	8-92
D-500-0255-531-1 & -2	8-92
D-500-0255-533-1 & -2	8-92
D-500-0255-535-1 & -2	8-92
D-500-0255-537-1 & -2	8-92
D-500-0255-541-1	8-92
D-500-0255-542-1	8-92
D-500-0255-543-1 & -2	8-92
D-500-0255-545-1 & -2	8-92
D-500-0255-551-1	8-92
D-500-0255-552-1	8-92
D-500-0255-553-1 & -2	8-92
D-500-0255-555-1 & -2	8-92
D-500-0255-557-1 & -2	8-92
D-500-0255-561-1	8-92
D-500-0255-562-1	8-92
D-500-0255-563-1 & -2	8-92
D-500-0255-565-1 & -2	8-92
D-500-0255-567-1 & -2	8-92
D-500-0255-571-1	8-92
D-500-0255-572-1	8-92
D-500-0255-573-1 & -2	8-92
D-500-0255-575-1 & -2	8-92
D-500-0255-577-1 & -2	8-92
D-500-0255-581-1	8-92
D-500-0255-582-1	8-92
D-500-0255-583-1 & -2	8-92
D-500-0255-585-1	8-92
D-500-0255-587-1 & -2	8-92
D-500-04	8-85
D-500-0455-1, -2	8-105
D-500-0455-1-YYY-ZZZ	8-86
D-500-0455-2-YYY-ZZZ	8-86
D-500-0456-1-YYY-ZZZ	8-86
D-500-0456-2-YYY-ZZZ	8-86
D-500-0457-1	8-105
D-500-0457-1-YYY-ZZZ	8-86
D-500-0457-2-YYY-ZZZ	8-86
D-500-0458-1-YYY-ZZZ	8-86
D-500-0458-2-YYY-ZZZ	8-86
D-500-0463-612	8-96
D-500-0463-613, -614	8-96
D-500-0465-1-YYY-ZZZ	8-86
D-500-0465-2-YYY-ZZZ	8-86
D-500-0466-1-YYY-ZZZ	8-86
D-500-0466-2-YYY-ZZZ	8-86
D-500-0467-1-YYY-ZZZ	8-86
D-500-0467-2-YYY-ZZZ	8-86
D-500-0468-1-YYY-ZZZ	8-86
D-500-0468-2-YYY-ZZZ	8-86
D-500-94-*	8-102, 8-103
D-500-9463-*	8-102, 8-104
D-500-L455-X-YYY-ZZZ	8-90
D-500-L456-X-YYY-ZZZ	8-90
D-500-L457-X-YYY-ZZZ	8-90
D-500-L458-X-YYY-ZZZ	8-90
D-500-L4xx	8-88
D50-100 FR	4-107
D-600-0065, -068	8-96
D-600-0071	8-81
D-600-0083	8-96
D-600-0116	8-81
D-600-0125	8-81
D-600-9463-*	8-102
D-602	8-73
D-602-0093, -0094	8-80
D-602-0095, 0104, 0105	8-80
D-602-0106, 0107	8-80
D-602-0122, -0123	8-77
D-602-0126, -0127	8-75
D-602-0140	8-77, 8-78
D-602-0141	8-77
D-602-0142	8-77, 8-78
D-602-0143,-0144, -0145, -0146, -0147, -0150, -0151	8-77
D-602-0156/0157-X	8-78
D-602-0171	8-78
D-602-0172, -0173, -0174	8-75
D-602-0185, -0186, -0187, -0189	8-80
D-602-0278, -0279, -0288, -0289	8-79
D-602-1108, -1109, -1110, -1111, -1112, -1113	8-77
D-602-16, -17	8-74
D-602-44, -45	8-75
D-602-46, -47	8-74
D-602-54, -55	8-75
D-602-56, -57	8-74
D-602-72, -73, -76, -77	8-75
D-607	8-57
D-609-03, -04, -05, -06, -07, -08, -09, -10, -11, -12, -13, -14	8-26
D-610-09, -10	8-75
D-621-0406	8-96, 8-97
D-621-0406-L	8-98
D-621-0407	8-96, 8-97
D-621-0407-L	8-98
D-621-0413	8-96, 8-97
D-621-0413-L	8-98
D-621-0415	8-96 to 8-98
D-621-0415-L	8-98
D-621-0417	8-96, 8-97
D-621-0417-L	8-98
D-621-0418	8-94, 8-97
D-621-0418-L	8-98
D-621-0423	8-96, 8-97
D-621-0423-L	8-98
D-621-0424	8-96, 8-97
D-621-0424-L	8-98
D-621-0453	8-96, 8-97
D-621-0453-L	8-98
D-621-0454	8-96, 8-97
D-621-0454-L	8-98
D-621-0455	8-96, 8-97
D-621-0455-L	8-98
D-621-0456	8-96, 8-97
D-621-0456-L	8-98
D-621-0457	8-96, 8-97
D-621-0457-L	8-98
D-621-0458	8-96, 8-97
D-621-0458-L	8-98
D-621-0459	8-96, 8-97
D-621-0459-L	8-98
D-621-0460	8-96
D-621-0460-L	8-98
D-621-0461	8-96, 8-97
D-621-0461-L	8-98
D-621-0462	8-96, 8-97
D-621-0462-L	8-98
D-621-0463	8-96, 8-97
D-621-0463-L	8-98
D-621-0464	8-96, 8-97
D-621-0464-L	8-98
D-621-0465	8-96, 8-97

Part Index (Continued)

Product or Part Number	Page Number
D-621-0465-L	8-98
D-621-0466	8-96, 8-97
D-621-0467	8-96, 8-97
D-621-0467-L	8-98
D-621-0468	8-96, 8-97
D-621-0468-L	8-98
D-621-0469	8-96, 8-97
D-621-0469-L	8-105
D-621-0470	8-96, 8-97
D-621-0470-L	8-98
D-621-0471	8-96, 8-97
D-621-0471-L	8-98
D-621-0472	8-96, 8-97
D-621-0472-L	8-98
D-621-0473	8-96, 8-97
D-621-0473-L	8-98
D-621-0474	8-96, 8-97
D-621-0475	8-96, 8-97
D-621-0475-L	8-98
D-621-0476	8-96, 8-97
D-621-0476-L	8-98
D-621-0477	8-96, 8-97
D-621-0477-L	8-98
D-621-0478	8-96, 8-97
D-621-0478-L	8-98
D-621-0479	8-96, 8-97
D-621-0479-L	8-98
D-621-0480	8-96, 8-97
D-621-0480-L	8-98
D-621-0481	8-96, 8-97
D-621-0481-L	8-98
D-621-0482	8-96, 8-97
D-621-0483	8-96, 8-97
D-621-0483-L	8-98
D-621-0484	8-96, 8-97
D-621-0484-L	8-98
D-621-E03K-P	8-99
D-621-E03K-S	8-99
D-621-E077-P	8-99
D-621-E077-S	8-99
D-621-F077-P	8-99
D-621-F077-S	8-99
D-711-00, -04, -07, -08	8-45
D-713-03	8-45
D-714-00, -01	8-45
Data Bus (MIL-STD-1553B) Components	8-82 to 8-105
Data Bus Accessories	8-95 to 8-99
Data Bus Box Couplers	8-91 to 8-92
Data Bus Cables	8-83
Data Bus Discrete Connectors	8-93 to 8-94
Data Bus In-Line Microcouplers	8-85 to 8-87
Data Bus Ultra Lightweight In-Line Microcouplers	8-88 to 8-90
DCPT Tubing	3-21
Demateable Terminators	8-102
Digital Video Interface (DVI)	9-92

Product or Part Number	Page Number
DK-3716-E#01-TP, TS	8-99
DK-3716-E#02-TP, TS	8-99
DK-3716-E#12K-TP, TS	8-99
DK-3716-E03K-P, S	8-99
DK-3716-E102-TP, TS	8-99
DK-3716-E112-TP, TS	8-99
DK-3716-E202-TP, TS	8-99
DK-3716-E212-TP, TS	8-99
DK-3716-F077-P, S	8-99
DK-3716-F101-TP, TS	8-99
DK-3716-F201-TP, TS	8-99
DK-602-0156-N-1	8-77, 8-100
DK-602-0156-N-2	8-77, 8-100, 8-105
DK-602-0156-N-3	8-78, 8-100
DK-602-0157-N-1	8-78, 8-100
DK-602-0157-N-2	8-78, 8-100, 8-105
DK-602-0157-N-3	8-78, 8-100
DK-602-0169-1	8-78
DK-602-0170-1	8-78
DK-602-0186-2	8-80
DK-602-0187-2	8-80
DK-621	8-83, 8-98, 8-104
DK-621-0411-P	8-97, 8-98, 8-105
DK-621-0411-S	8-97, 8-98
DK-621-0412-P	8-97, 8-98, 8-105
DK-621-0412-S	8-97, 8-98
DK-621-0433-1P	8-97, 8-98
DK-621-0433-1S	8-97, 8-98
DK-621-0434-1P	8-97, 8-98, 8-105
DK-621-0434-1S	8-97, 8-98
DK-621-0435-2P	8-97, 8-98
DK-621-0435-2S	8-97, 8-98
DK-621-0436-2P	8-97, 8-98
DK-621-0436-2S	8-97, 8-98
DK-621-0437-3P	8-97, 8-98
DK-621-0437-3S	8-97, 8-98
DK-621-0438-3P	8-97, 8-98
DK-621-0438-3S	8-97, 8-98
DK-621-0439-4P	8-97, 8-98
DK-621-0439-4S	8-97, 8-98
DK-621-0440-4P	8-97, 8-98
DK-621-0440-4S	8-97, 8-98
DK-621-0446-3P	8-98
DK-621-0446-3S	8-98
DK-621-0448-2P	8-98
DK-621-0448-2S	8-98
DK-621-0512-P	8-97
DK-621-0512-S	8-97
DK-621-0546-3P	8-97
DK-621-0546-3S	8-97
DK-621-0548-2P	8-97
DK-621-0548-2S	8-97
DK-621-0550-1P	8-97, 8-98
DK-621-0550-1S	8-97, 8-98
DK-621-0551-4P	8-97, 8-98
DK-621-0551-4S	8-97, 8-98

Product or Part Number	Page Number
DK-621-09*	8-103
DK-621-0911P	8-102
DK-621-0911S	8-102
DK-621-0912P	8-102
DK-621-0912S	8-102
DK-621-0933	8-102
DK-621-0933-1P or S	8-102
DK-621-0934	8-102
DK-621-0934-1P or S	8-102
DK-621-0935	8-102
DK-621-0935-2P or S	8-102
DK-621-0936	8-102
DK-621-0936-2P or S	8-102
DK-621-0937	8-102
DK-621-0937-3P or S	8-102
DK-621-0938	8-102
DK-621-0938-3P or S	8-102
DK-621-0939	8-102
DK-621-0939-4P or S	8-100
DK-621-0940	8-102
DK-621-0940-4P or S	8-102
DK-621-E102-TP	8-99
DK-621-E102-TS	8-99
DK-621-E202-TP	8-99
DK-621-E202-TS	8-99
DK-621-F101-TP	8-99
DK-621-F101-TS	8-99
DK-621-F201-TS	8-99
DR-25 Tubing	3-23
DR-25-TW	3-25
D-SCE Identification Sleeves	2-3
DuraSeal Crimp Splices	8-18 to 8-19
DuraSeal Insulated Crimp Terminals	8-31 to 8-36
DWP-125 Tubing	3-27
E63259-000	10-6
E95798-000	10-12
Electrical Shielding	9-113 to 9-114
Electroloss FilterLine	9-67 to 9-72
EN4165	9-93
ES Cap-no. 1, 2, 3	3-34
ES Caps	3-33
ES1000 Tubing	3-29
ES1000-no. 1, 2, 3, 4	3-30
ES2000 Tubing	3-31
ES2000-no. 1, 2, 3, 4	3-32
Ethernet Category Cables	9-92
F11734-000	10-14
F150-400 FR	4-107
F-23 FR	4-107
F25836-000	10-12
F30529-000	10-14
F3-9 FR	4-107
F42-60 FR	4-107
F52511-000	10-20
F66989-000	10-6

Catalog 1654025
Revised 3-13

www.te.com

Dimensions are shown for reference purposes only. Specifications subject to change.

Dimensions are in millimeters unless otherwise specified.

USA: +1 800 522 6752
Asia Pacific: +86 0 400 820 6015
UK: +44 800 267 666

For additional support numbers please visit www.te.com

Part Index (Continued)

Product or Part Number	Page Number
F75-100 FR	4-107
F83221-000	10-16
FDR-25	9-93
FDR25 Cable Jacket Material	9-103 to 9-104
Fiber Channel	9-92
FireWire/IEEE 1394	9-92
FL2500 Tubing	3-35
FL2500-no. 1, 2, 3, 4	3-36
FLCW0211	9-52
FLCW0211-0.35-*	9-55
FLCW0211-0.50-*	9-55
FLCW0211-0.75-*	9-55
FLCW0211-1.00-*	9-55
FLCW0211-1.50-*	9-55
FLCW0211-2.50-*	9-55
FLCW0219	9-52
FLCW0219-0.35-*	9-55
FLCW0219-0.50-*	9-55
FLCW0219-0.75-*	9-55
FLCW0219-1.00-*	9-55
FLCW0219-1.50-*	9-55
FLCW0219-2.50-*	9-55
FLDWC0311-0.25*	9-57
FLDWC0311-0.35*	9-57
FLDWC0311-0.50*	9-57
FLDWC0311-0.75*	9-57
FLDWC0311-1.00*	9-57
FLDWC0311-1.50*	9-57
FLDWC0311-14-*	9-57
FLDWC0311-16-*	9-57
FLDWC0311-18-*	9-57
FLDWC0311-2.00*	9-57
FLDWC0311-2.50*	9-57
FLDWC0311-20-*	9-57
FLDWC0311-22-*	9-57
FLDWC0311-24-*	9-57
FLDWC0311-26-*	9-57
FLDWX031X	9-52
FlexLine (SPEC 80) Wire	9-21 to 9-22
FlexLite Commercial Wire	9-52 to 9-53
FlexLite CW Wire	9-54 to 9-55
FlexLite DW Wire	9-56
FlexLite HT Wire	9-60 to 9-61
FlexLite TW Wire	9-58 to 9-59
FLHTC0311-0.25-*	9-61
FLHTC0311-0.35-*	9-61
FLHTC0311-0.50-*	9-61
FLHTC0311-0.75-*	9-61
FLHTC0311-1.00-*	9-61
FLHTC0311-1.50-*	9-61
FLHTC0311-10*	9-61
FLHTC0311-12*	9-61
FLHTC0311-14*	9-61
FLHTC0311-16*	9-61
FLHTC0311-18*	9-61
FLHTC0311-2.00-*	9-61

Product or Part Number	Page Number
FLHTC0311-2.50-*	9-61
FLHTC0311-20*	9-61
FLHTC0311-22*	9-61
FLHTC0311-24*	9-61
FLHTC0311-26*	9-61
FLHTX031X	9-52
FLS40	6-78
FLS41	6-78
FLS54	6-78
FLTWC0311-10*	9-59
FLTWC0311-12*	9-59
FLTWC0311-14*	9-59
FLTWC0311-16*	9-59
FLTWC0311-18*	9-59
FLTWC0311-20*	9-59
FLTWC0311-22*	9-59
FLTWC0311-24*	9-59
FLTWC0311-26*	9-59
FLTWX031X	9-52
FLTXX031X	9-52
FLX40	8-108
FTR 16-10	9-117
FTR 16-16	9-117
FTR 16-2.5	9-117
FTR 16-25	9-117
FTR 16-35	9-117
FTR 16-4	9-117
FTR 16-50	9-117
FTR 16-6	9-117
FTR 16-70	9-117
FTR 16-95	9-117
Gigabit Ethernet Connectors	9-93
GPR Rectangular Connectors	2-3
HarnVis™ 3D System	2-6
HarnWare™ V6	2-2 to 2-7
HCTE Tubing	3-37
HET-A-02X	6-82
HET-A-03X	6-82
HET-A-04*	6-82
HEX-*	6-81
HEX07-A*	6-82
HEXA6-*	6-82
HexaShield EMC/EMI Adapters	6-79 to 6-84
HEXDB-AC-*	6-82
HF Tubing	3-39
HF04, 07, 11, 13, 15, 17, 20, 27	3-40
HFT5000 Tubing	3-41
High Speed Copper Cables	9-89
High Temperature Sealing Sleeves	3-90
HL 2010E Hot Air Heating Tool	10-13, 10-14
HL1910E Hot Air Heating Tool	10-13, 10-14
HR**060, 125, 175, 200, 250, 300, 400	3-44
HRHF Tubing	3-43
HRHT Tubing	3-45
HRHT-1/X, 2/X, 3/X, 4/X, 5/X	3-46
HRNF Tubing	3-43

Product or Part Number	Page Number
HRSR Tubing	3-43
HTAT Tubing	3-47
In-Line Couplers and Terminators	8-100
Integrated Military Harnessess	2-8 to 2-18
IR 1894 Shuttle Machine	10-15, 10-16
IR-1759 MiniRay Heating Tool	10-18 to10-21
IR-1759-MK4-AT3130-EDCONT	10-19
IR-550 Mark II Heating Tool	10-17
KTKK Assemblies	7-2
Laser Markable FEP	9-93
Leister CV-198X	8-70
LNCL-11-125	4-112
LNCL-11-205	4-112
LNCL-12-140	4-112
LNCL-12-240	4-112
LNCL-13-155	4-112
LNCL-13-305	4-112
LNCL-14-185	4-112
LNCL-14-355	4-112
LNCL-15-185	4-112
LNCL-15-260	4-112
LNCL-15-450	4-112
Low Fluoride XL-ETFE	9-93
M27500-*	9-7, 9-20
M81969/8-08	8-70
M81969/8-10	8-70
Maulflex Conduit System	3-49
MHCS	7-15, 7-16
MHCT	7-15, 7-16
MHHS	7-15, 7-16
MHHT	7-15, 7-16
Micro Heat Shrink Moulded Parts	2-3
Micro Molded Shapes	4-83 to 4-87
MIL-C-5015 Connectors	9-81
MIL-C-83723 Connectors	9-81
MIL-C-389999 Connectors	8-99
MiniSeal Crimp Splices	8-22 to 8-25
Model 105 Tunnel Oven	10-28, 10-29
Model 16B Belt Heater	10-22, 10-23
Model 19 Conveyor Heater	10-24, 10-25
Model 81CE Discrete Heater	10-26, 10-27
Modified FEP	9-93
Molded Shapes	9-93
Multiconductor (Multicore) Cables	9-94 to 9-96
NBC Cable Jacket Material	9-111
NT Tubing	3-51
NTFR Tubing	3-55
NT-MIL Tubing	3-53
PD Caps	3-57
PolyCrimp Crimp Splices	8-20 to 8-21
Power Cables	9-115 to 9-118
Properties and Specifications	9-111 to 9-112
PTCM Tubing	3-59
QFT, QFT1, QFT2, QFT3	4-104
QUADLITE Quadaxial Cables	9-84 to 9-88
Quadrax Contacts	9-93

Catalog 1654025
Revised 3-13

www.te.com

Dimensions are shown for reference purposes only. Specifications subject to change.

Dimensions are in millimeters unless otherwise specified.

USA: +1 800 522 6752
Asia Pacific: +86 0 400 820 6015
UK: +44 800 267 666

For additional support numbers please visit www.te.com

Part Index (Continued)

Product or Part Number	Page Number
Ray 101	9-99, 9-100
RAY 101-10.0	6-25
RAY 101-12.5	6-25
RAY 101-20.0	6-25
RAY 101-3.0	6-25
RAY 101-4.0	6-25
RAY 101-6.0	6-25
RAY 101-7.5	6-25
Ray 103	9-99
Ray 10X-10.0	9-100
Ray 10X-12.5	9-100
Ray 10X-20.0	9-100
Ray 10X-3.0	9-100
Ray 10X-4.0	9-100
Ray 10X-6.0	9-100
Ray 10X-7.5	9-100
Ray 90	9-99
Ray 90 -10.0	9-100
Ray 90 -12.5	9-100
Ray 90 -15.0	9-100
Ray 90 -20.0	9-100
Ray 90 -25.0	9-100
Ray 90 -3.0	9-100
Ray 90 -30.0	9-100
Ray 90 -4.0	9-100
Ray 90 -5.0	9-100
Ray 90 -6.0	9-100
RayBlock 105 Tubing	3-63
RayBlock 105 Kit 0102-A0	3-64
RayBlock 105 Kit 0103-A0	3-64
RayBlock 105 Kit 0105-A0	3-64
RayBlock 105 Kit 0107-A0	3-64
RayBlock 105 Kit 0110-A0	3-64
RayBlock 105 Kit 0504-A0	3-64
RayBlock 85 Tubing	3-61
RayBlock 85 Kit 0102-A0	3-62
RayBlock 85 Kit 0107-A0	3-62
RayBlock 85 Kit 0203-A0	3-62
RayBlock 85 Kit 0405-A0	3-62
RayBlock 85 Kit 0504-A0	3-62
RayBlock 85 Kit 0510-A0	3-62
RayBraid Tubular Braiding	9-99 to 9-100
Raychem C-Wrap Side Entry Repair Sleeve	8-70, 8-71
Raychem FlexiScreen Backshells	6-77
Raychem Marine High-Voltage Termination & Splice Kits	7-15, 7-16
Raychem RT-555 Heat Shrink Tape	5-5
Raychem Spin Lock Backshell	6-85
Raychem System 25	3-25
RayOLOn Kits	4-112
Rayrim Edging Material	3-65
RaySpool	3-67
Raythane FR	9-93
Raythane, NT/Thermorad NTFR, Rayolin and AFR	9-110
RB-110	6-79

Product or Part Number	Page Number
RB-114	6-79
RBD-50-L-00, -01, -02, -03, -04	8-62
RBD-50-M-00, -01, -02, -03, -04	8-62
RBD-50-S-00, -01, -02, -03, -04	8-62
RBD-75-L-00, -01, -02, -03, -04	8-62
RBD-75-M-00, -01, -02, -03, -04	8-62
RBD-75-S-00, -01, -02, -03, -04	8-62
RBK-ILS-Processor-Mk11	10-30, 10-31
RF One-Step BNC/TNC Connectors	2-3, 8-59 to 8-64
RG Coaxial Cables	2-3
RH3960 Tinel Kit	6-85
RH-396X Tinel-Lock tool	10-7
RHW Tubing	3-70
RMW Tubing	3-72
RNF-100 Tubing	3-74
RNF-150 Tubing	3-76
RNF-3000 Tubing	3-78
RP-4800 Tubing	3-80
RPPM Tubing	3-82
RT-3 Tubing	3-84
RT-375 Tubing	2-11, 3-86
RT555 Tubing	3-88, 3-90
RT-770 Tubing	2-11, 3-92
RT-780 Tubing	2-3, 2-11, 3-94
RT-790 Tubing	2-11, 3-96
RTD-50-L-00	8-63
RTD-50-L-01	8-64
RTD-50-L-02	8-64
RTD-50-L-03	8-63
RTD-50-L-04	8-63
RTD-50-M-00	8-63
RTD-50-M-01	8-64
RTD-50-M-02	8-64
RTD-50-M-03	8-63
RTD-50-M-04	8-63
RTD-50-S-00	8-63
RTD-50-S-01	8-64
RTD-50-S-02	8-64
RTD-50-S-03	8-63
RTD-50-S-04	8-63
RTD-75-L-00, -01, -02, -03, -04	8-63
RTD-75-M-00	8-63
RTD-75-M-01, -02	8-64
RTD-75-M-03, -04	8-63
RTD-75-S-00	8-63
RTD-75-S-01, -02	8-64
RTD-75-S-03, -04	8-63
RW-175 Tubing	3-98
RW-200 Tubing	3-100
RW-200E Tubing	3-100
S01/S02/S03	8-48
S01-01-R	8-50, 8-53
S01-02-R	8-50, 8-53
S01-03-R	8-50, 8-53
S01-04-R	8-50, 8-53

Product or Part Number	Page Number
S01-05-R	8-50, 8-53
S02-01-R	8-50, 8-53
S02-02-R	8-50, 8-53
S02-03-R	8-50, 8-53
S02-04-R	8-50, 8-53
S02-05-R	8-50, 8-53
S02-06-R	8-50, 8-53
S02-07-R	8-50, 8-53
S02-08-R	8-50, 8-53
S02-09-R	8-50, 8-53
S02-10-R	8-50, 8-53
S02-11-R	8-50, 8-53
S02-12-R	8-50, 8-53
S02-13-R	8-50, 8-53
S02-14-R	8-50, 8-53
S02-15-R	8-50, 8-53
S02-16-R	8-50, 8-53
S02-17-R	8-50, 8-53
S02-18-R	8-50, 8-53
S02-19-R	8-50, 8-53
S03-01-R	8-50
S03-02-R	8-50
S03-03-R	8-50
S03-04-R	8-50
S03-05-R	8-50
S03-06-F	8-50
S03-07-R	8-50
S03-08-R	8-50
S03-09-R	8-50
S03-10-R	8-50
S1006	5-2, 5-3
S1009	5-2, 5-3
S1017	2-9, 2-12, 5-2, 5-3
S1030	2-9, 2-12, 5-2, 5-3, 7-9
S1048	2-9, 2-12, 5-2, 5-3, 7-9
S1124	2-9, 2-12, 5-2, 5-3
S-1125	2-9, 2-12, 3-25
S1125	5-2, 5-3
S1255 -04	2-9, 2-11, 2-12, 5-2, 5-3
S-1264	2-11, 2-12
S1264	5-2, 5-3
S1275	7-9
S1278	5-2, 5-3
S1278-01	5-2
S1278-02	5-2
S1297	5-2, 5-3
S1305	5-2, 5-3
S1305-01	5-2
S200	8-48
S200-1-00, -01	8-51
S200-1-1-WI-22-9	8-51
S200-2-00, -01	8-51
S200-2-1-WI-22-9	8-51
S200-3-00, -01	8-51
S200-3-1-WI-22-9	8-51
S200-4-00, -01	8-51

Catalog 1654025
Revised 3-13

www.te.com

Dimensions are shown for reference purposes only. Specifications subject to change.

Dimensions are in millimeters unless otherwise specified.

USA: +1 800 522 6752
Asia Pacific: +86 0 400 820 6015
UK: +44 800 267 666

For additional support numbers please visit www.te.com

Part Index (Continued)

Product or Part Number	Page Number
S200-4-1-WI-22-9	8-51
S200-5-00, -01	8-51
S200-5-1-WI-22-9	8-51
S-500-0255-585-2	8-92
S92-10-R	8-50
SCL Tubing	3-102
SCT Tubing	3-104
SCT no. 1, no. 2, no. 3, no. 4	3-105
SeaLAN Ethernet Cables	9-79 to 9-80
SEB 4	4-114
SESK Kits	7-10
SFR Tubing	3-106
SGRP	8-12
SGRP-1, -2, -, -3, -4	8-13, 8-16
SGRS	8-12
SGRS-1, -2, -3, -4	8-13
SGRS-2-58, 3-58, 4-58	8-13
SGRS-X-58	8-12
SGRT-2-XX	8-39
SGRT-2-XX	8-40
SGRT-3-XX	8-39
SGRT-3-XX	8-40
SGRT-4-XX	8-39
SGRT-4-XX	8-40
SHF-260 Highly Flexible Wire	9-81
Ship or Shore Breakout Kits	7-11
shrinkHOop	4-115
SL*	6-86
SO175	8-48
SO175-1-01	8-51
SO175-1-1-55-22-90	8-51
SO175-2-00	8-51
SO175-2-01	8-51
SO175-2-1-55-22-90	8-51
SO175-3-00	8-51
SO175-3-01	8-51
SO175-3-1-55-22-90	8-51
SO175-4-00	8-51
SO175-4-01	8-51
SO175-4-1-55-22-90	8-51
SO175-5-00	8-51
SO175-5-01	8-51
SO175-5-1-55-22-90	8-51
SO63	8-48
SO63-1-00	8-49, 8-53
SO63-1-01	8-49
SO63-1-55-20-90	8-49, 8-53
SO63-1-55-22-90	8-49, 8-53
SO63-1-55-24-90	8-49, 8-53
SO63-1-55-26-90	8-49, 8-53
SO63-1-9030	8-49
SO63-2-00	8-49, 8-53
SO63-2-01	8-49
SO63-2-55-20-90	8-49, 8-53
SO63-2-55-22-90	8-49, 8-53
SO63-2-55-24-90	8-49, 8-53

Product or Part Number	Page Number
SO63-2-55-26-90	8-49, 8-53
SO63-2-9030	8-49
SO63-3-00	8-49, 8-53
SO63-3-01	8-49
SO63-3-55-20-90	8-49, 8-53
SO63-3-55-22-90	8-49, 8-53
SO63-3-55-24-90	8-49, 8-53
SO63-3-55-26-90	8-49, 8-53
SO63-3-9030	8-49
SO63-4-00	8-49, 8-53
SO63-4-01	8-49
SO63-4-55-20-90	8-49, 8-53
SO63-4-55-22-90	8-49, 8-53
SO63-4-55-24-90	8-49, 8-53
SO63-4-55-26-90	8-49, 8-53
SO63-4-9030	8-49
SO63-5-00,	8-49, 8-53
SO63-5-01	8-49
SO63-5-55-20-90	8-49, 8-53
SO63-5-55-22-90	8-49, 8-52
SO63-5-55-24-90	8-49, 8-52
SO63-5-55-26-90	8-49, 8-52
SO63-5-9030	8-49
SO96	8-48
SO96-1-01	8-51
SO96-1-55-22-90	8-51
SO96-2-01	8-51
SO96-2-55-22-90	8-51
SO96-3-01	8-51
SO96-3-55-22-90	8-51
SO96-4-01	8-51
SO96-4-55-22-90	8-51
SO96-5-01	8-51
SO96-5-55-22-90	8-51
SolderGrip Closed End Splices	8-12 to 8-17
SolderGrip Insulated Terminals	8-38 to 8-41
SolderShield Shielded & Coaxial Cable Splices	8-66 to 8-69
SolderSleeve Coaxial Cable Terminators	8-55 to 8-58
SolderSleeve PCB Coaxial Cable Terminators	8-57 to 8-58
SolderSleeve Shield Terminators	8-48 to 8-53
SolderSleeve Termination Devices	9-93
SolderSleeve Wire Splices	8-6 to 8-11
SolderSleeve Wire Terminators	8-43 to 8-46
Soldertact Contact Devices	2-3
SolderTacts Shielded One-Piece Solder Contacts	8-73
SP175-1-00	8-51
Space Grade Data Bus Components	8-101 to 8-104
SPEC 44 Wire and Cable	9-3 to 9-9
SPEC 55 Wire and Cable	9-10 to 9-20
Spin-Lock Adaptors	2-3
Splice Kits	8-102
SRFR	3-108

Product or Part Number	Page Number
SSB, D, T, F to 8S	4-106
SSB-1202 FR	4-107
SSB-2002 FR	4-107
SSC	4-60
SSC-1, -2, -3, -4, -5, -6, -7	4-61
SSC-5M1	4-61
SST Tubing	3-110
SST-03, -04, -07, -11, -13, -15, -17 -20, -27, -30, -40, -45	3-111
SST-FR Tubing	3-110
Standard Space Cables	8-102
Steinel HL1802E-074616 SolderSleeve Reflector for HL Tools	8-70
Steinel HL1910E or HL2010E General Purpose Hot-Air Tool	8-70
STXR Adaptors	2-3
T14-23 FR	4-107
T14-50 FR	4-107
T150-300 FR	4-107
T3-9 FR	4-107
T400 FR	4-107
T42-100 FR	4-107
T500-600 FR	4-107
TAT-125 Tubing	3-112
TC Caps	3-114
TC4001, 4003, 4005	3-115
TCFS/R	7-6
TCFS/R-12, -16, -20, -24, -30, -36	7-8
TFE Tubing	3-116
TFE-R Tubing	3-116
TG-23	5-5
TG-24	5-5
Themocouple EX	9-63
Thermocouple Extension Cable	9-62 to 9-64
Thermocouple JX	9-63
Thermocouple KX	9-63
Thermocouple TX	9-63
ThermoGun HG Hot-Air Heating Tool	10-32, 10-33
Thermorad HT (Modified ETFE)	9-93
Thermorad HTF/Fluroelastomer Cable Jacket Material	9-110
Thermorad F	9-93
Thermorad FL	9-93
Thermorad K (Modified PVDF)	9-93
Thermorad NTFR	9-93
Thermorad O	9-93
Thermorad S	9-93
Thermorad/Thermorad F Cable Jacket Material	9-109
Threaded Triaxial Connectors	8-102
Tinel-Lock Ring	6-26
TMS-SCE-3/16-2.0-9	8-105
Triaxial Size 8 Contacts	8-100
Tubing Kits and Mini-Spools	3-118
Twinax Contacts	9-93
Type 99M Wire	9-23 to 9-25

Part Index (Continued)

Product or Part Number	Page Number
Type AFR	9-115
Type FTR	9-115
Type TR	9-115
Type ZHI	9-115
Type ZHPCG	9-115
Universal Serial Bus (Hi-Speed)	9-92
Universal Serial Bus (Super-Speed)	9-92
URHR-1, 2, 3, 4, 5	4-115
URHT Tubing	3-120
URHT-200	3-121
URHT-300	3-121
UXL-ETFE	9-93
Versafit Tubing	3-122
Versaflex Tubing	3-124
Versaflex-FR Tubing	3-124
VG95218 Pt 28 Multicore Cables	2-3
XFFR Tubing	3-126
XFFR-03, 04, -07, -11, -15, -20, -30	3-127
Zerohal	9-93
Zerohal 100A Wire	9-27 to 9-29
Zerohal 100G Wire	9-30 to 9-32
Zerohal Cable Jacket Material	9-101 to 9-103
Zerohal PROFIBUS Cables	9-82 to 9-83
ZH-100 Tubing	3-128
ZHPCG-35-1	9-117
ZHPCG-35-1.5	9-117
ZHPCG-35-10	9-117
ZHPCG-35-120	9-117
ZHPCG-35-150	9-117
ZHPCG-35-16	9-117
ZHPCG-35-184	9-117
ZHPCG-35-2.5	9-117
ZHPCG-35-240	9-117
ZHPCG-35-25	9-117
ZHPCG-35-300	9-117
ZHPCG-35-35	9-117
ZHPCG-35-4	9-117
ZHPCG-35-400	9-117
ZHPCG-35-50	9-117
ZHPCG-35-6	9-117
ZHPCG-35-70	9-117
ZHPCG-35-95	9-117
ZHTM Tubing	3-130

Catalog 1654025
Revised 3-13

www.te.com

Dimensions are shown for reference purposes only. Specifications subject to change.

Dimensions are in millimeters unless otherwise specified.

USA: +1 800 522 6752
Asia Pacific: +86 0 400 820 6015
UK: +44 800 267 666

For additional support numbers please visit www.te.com

Engineering Notes

Catalog 1654025
Revised 3-13

www.te.com

Dimensions are shown for reference purposes only. Specifications subject to change.

Dimensions are in millimeters unless otherwise specified.

USA: +1 800 522 6752
Asia Pacific: +86 0 400 820 6015
UK: +44 800 267 666

For additional support numbers please visit www.te.com

Global Contacts

Americas

United States – Harrisburg, PA
Product Information Center:
(Technical Support)
Phone: +800-522-6752
Fax: +717-986-7575

Menlo Park, CA 94025-1164
USA
Phone: +1-800-926-2425
+1-650-361-3860
Fax: +1-717-986-7575

Asia

Phone: +86-400-820-6015

Europe

Austria
Phone: +43-1-905-601-228

Baltic Regions
Phone: +46-8-5072-5000

Benelux
Phone: +31-73-6246-999

France
Phone: +33-1-34-20-86-86

Germany
Phone: +49-6251-133-1999

Italy
Phone: +39-011-401-2632

Nordic
Phone: ++46-8-5072-5000

Spain/Portugal
Phone: +34-93-2910366

Switzerland
Phone: +41-52-633-66-26

United Kingdom
Phone: +44-800-267-666

Czech Republic
Phone: +420-800-701-462

Poland
Phone: +48-800-702-309

Hungary
Phone: +36-809-874-04

Russia
Phone: +7495-790-790-2

Need more information?

Technical Support is staffed with specialists well versed in all TE Connectivity products. They can provide you with:

- Technical Support
- Catalogs
- Technical Documents
- Product Samples
- TE Connectivity Authorized Distributor Locations

Web Site

Visit **www.te.com/ADM** for additional information on all our products and market segments for the Aerospace, Defense and Marine markets.

© Copyright 2002, 2003, 2004, 2009, 2012 and 2013 by TE Connectivity. All Rights Reserved.

ATUM, ALTERA, CHEMINAX, CRES-LOCK, DURASEAL, DYNALINK, ELECTROLOSS FILTERLINE, FASTON, FLEXLINE, FLEXLITE, HARNWARE, HEXASHIELD, MICROFIT, MINIRAY, MINISEAL, MTC, NF-100, PINPAK, POLYCRIMP, QUADLITE, RAYATEN, RAYBLOCK, RAYCHEM, RAYBRAID, RAYFLEX, RAYFOAM, RAYOLIN, RAYOLON, RAYRIM, RAYSPOOL, RAYTHANE, SEALITE, SEALAN, SHRINKHOOP, SOLDERGRIP, SOLDERPAK, SOLDERSHIELD, SOLDERSLEEVE, SOLDERTACTS, SPEC 44, SPEC 55, SPEC 80, SYSTEM 100, TE LOGO, THERMOGUN, THERMORAD, THERMOCOUPLE, TINEL, TINEL-LOCK, TE CONNECTIVITY, TYPE 99, UNIBOOT, VERSAFIT, VERSAFLEX, and ZEROHAL are trademarks.

Other products, logos, and company names mentioned herein may be trademarks of their respective owners.

Kevlar and Teflon are trademarks of E.I. du Pont de Nemours and Company.

Mylar is a trademark of Dupont Teijin Films U.S.

Kynar is a trademark of Atofina Chemicals, Inc.

Skydrol is a trademark of Monsanto Company.

Steinel is a trademark of Steinel GmbH.

LuxCis is a trademark of Radiall, S.A.

PROFIBUS is a trademark of Profibus International.

Disclaimer
All information, including illustrations, is believed to be reliable. Users, however, should independently evaluate the suitability of each product for their application. TE Connectivity makes no warranties as to the accuracy or completeness of the information, and disclaims any liability regarding its use. TE Connectivity only obligations are those in the Standard Terms and Conditions of Sale for these products and in no case will TE Connectivity be liable for any incidental, indirect or consequential damages arising from the sale, resale, use, or misuse of the product.

TE Connectivity specifications are subject to change without notice. In addition, TE Connectivity reserves the right to make changes in materials or processing without notification to the Buyer which do not affect compliance with any applicable specification.

Export of TE Connectivity products may require licensing.

Printed in the U.S.A.

TE Connectivity
www.te.com

te.com

© 2013 Tyco Electronics Corporation, a TE Connectivity Ltd. Company. All Rights Reserved.
1654025 GIC 7.5K MS 03/2013
TE Connectivity, TE connectivity (logo) and TE (logo) are trademarks. Other logos, product and/or company names might be trademarks of their respective owners.