THIS DRAWING IS UNPUBLISHED. RELEASED FOR PUBLICATION -,- .
© COPYRIGHT - BY TYCO ELECTRONICS CORPORATION. ALL RIGHTS RESERVED.

LOC	DIST
AD	00

REVISIONS

P	LTR	DESCRIPTION	DATE	DWN	APVD
	L	ECO-05-006325	28JUL06	BSV	MK
	L1	REV PER ECO-09-021510	10SEP09	KK	AEG

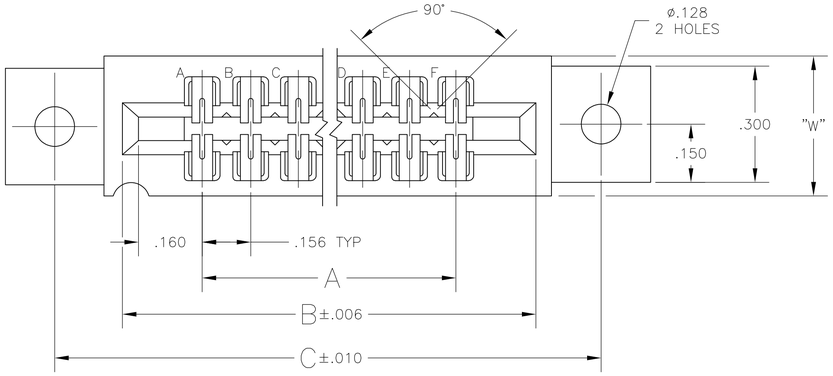

1. .000015 MIN GOLD OVER .000050 MIN. NICKEL IN CONTACT AREA.
2. .000030 MIN GOLD OVER .000050 MIN. NICKEL IN CONTACT AREA.
3. ALL PARTS ASSEMBLED IN MEXICO MUST BE STAMPED "ASSY IN MEXICO" THE WORD "MEXICO" CAN BE SUBSTITUTED ONLY WHERE PART SIZE PROHIBITS STAMPING "ASSY IN MEXICO", INK STAMP COLOR WHITE OR HOT STAMP (NO WHITE TAPE) PER 115-9009, APPROX WHERE SHOWN, SIDE OPTIONAL.
4. MATTE TIN PLATED CONTACT TAILS.
5. OBSOLETE PARTS: OBSOLETE CIS STREAMLINING PER D.RENAUD/D.SINISI

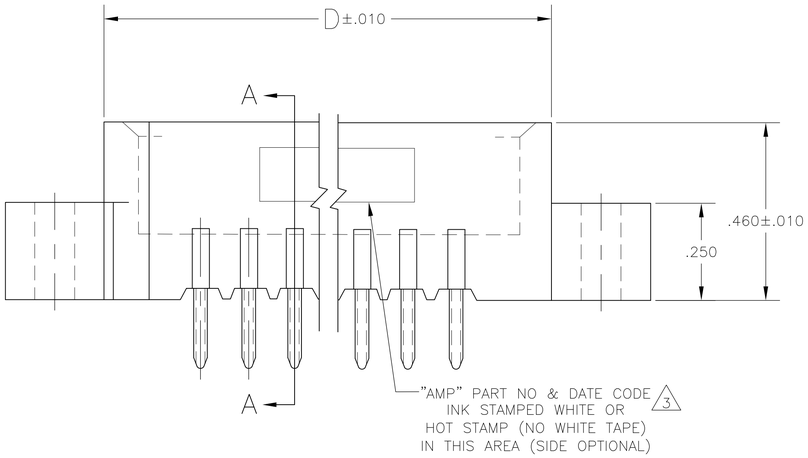

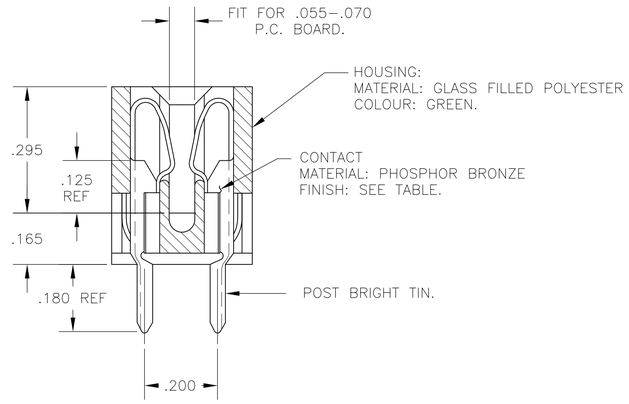

SECTION A-A

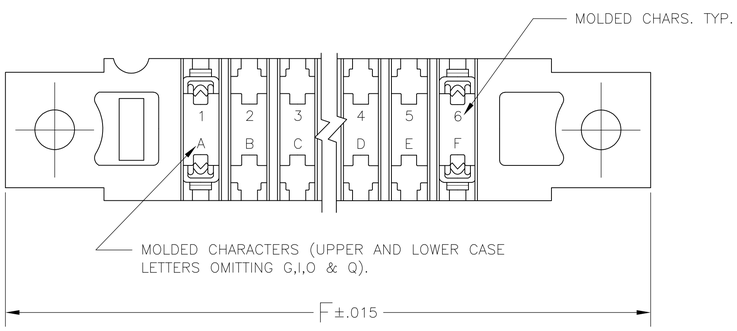

OBSOLETE

	1 PART NO	NO.OF. POSITION	A	B	C	D	W	F	2 PART NO
	4 –	43	6.552	6.872	7.307	7.012	.437	7.557	8-530656-3
OBSOLETE 5 4	–	28	4.212	4.532	4.967	4.672	.370	5.217	8-530656-2
OBSOLETE 5 4	–	25	3.744	4.064	4.499	4.204	.370	4.749	7-530656-8
	4 –	22	3.276	3.596	4.031	3.736	.370	4.281	7-530656-6
OBSOLETE 5 4	–	10	1.404	1.724	2.159	1.864	.370	2.409	7-530656-2
	~~1-530656-3~~	43	6.552	6.872	7.307	7.012	.437	7.557	3-530656-3
	~~1-530656-2~~	28	4.212	4.532	4.967	4.672	.370	5.217	3-530656-2
	~~1-530656-1~~	~~44~~	~~6.708~~	~~7.028~~	~~7.463~~	~~7.168~~	~~.437~~	~~7.713~~	~~3-530656-1~~
	~~1-530656-0~~	36	5.460	5.780	6.215	5.920	.437	6.465	~~3-530656-0~~
	~~530656-9~~	30	4.524	4.844	5.279	4.984	.437	5.529	~~2-530656-9~~
OBSOLETE	~~530656-8~~	25	3.744	4.064	4.499	4.204	.370	4.749	5 2-530656-8
	~~530656-7~~	~~34~~	~~3.588~~	~~3.908~~	~~4.343~~	~~4.048~~	~~.370~~	~~4.593~~	~~2-530656-7~~
	~~530656-6~~	22	3.276	3.596	4.031	3.736	.370	4.281	2-530656-6
	~~530656-5~~	~~18~~	~~2.652~~	~~2.972~~	~~3.407~~	~~3.112~~	~~.370~~	~~3.657~~	~~2-530656-5~~
	~~530656-4~~	~~15~~	~~2.184~~	~~2.504~~	~~2.939~~	~~2.644~~	~~.370~~	~~3.189~~	~~2-530656-4~~
	~~530656-3~~	~~12~~	~~1.716~~	~~2.036~~	~~2.471~~	~~2.176~~	~~.370~~	~~2.721~~	~~2-530656-3~~
	~~530656-2~~	10	1.404	1.724	2.159	1.864	.370	2.409	5 2-530656-2
	~~530656-1~~	~~6~~	~~.780~~	~~1.100~~	~~1.535~~	~~1.240~~	~~.370~~	~~1.785~~	~~2-530656-1~~

THIS DRAWING IS A CONTROLLED DOCUMENT.

DIMENSIONS: INCHES

TOLERANCES UNLESS OTHERWISE SPECIFIED:
0 PLC ± –
1 PLC ± –
2 PLC ± –
3 PLC ± .005
4 PLC ± –
ANGLES ± –

MATERIAL: SEE CALL-OUT
FINISH: SEE CALL-OUT

DWN – 19MAR75
CHK – 20MAR75
APVD – 20MAR75
PRODUCT SPEC –
APPLICATION SPEC –
WEIGHT –

Tyco Electronics
Tyco Electronics Corporation
Harrisburg, Pa 17105-3608

NAME: HOUSING ASSY, LOW PROFILE, EDGE CONNECTOR, FLOW SOLDER, FOR .052 DIA. HOLE .156X.200 CTRS.

SIZE	CAGE CODE	DRAWING NO	RESTRICTED TO
A1	00779	C-530656	–

CUSTOMER DRAWING | SCALE 4:1 | SHEET 1 OF 1 | REV L1