THIS DRAWING IS UNPUBLISHED. RELEASED FOR PUBLICATION -,- .
© COPYRIGHT - BY TYCO ELECTRONICS CORPORATION. ALL RIGHTS RESERVED.

LOC	DIST
GP	00

REVISIONS

P	LTR	DESCRIPTION	DATE	DWN	APVD
	B	REVISED PER ECO-07-000077	15FEB07	CJV	SB
	B1	REVISED PER ECO-10-000443	18JAN10	KK	HMR

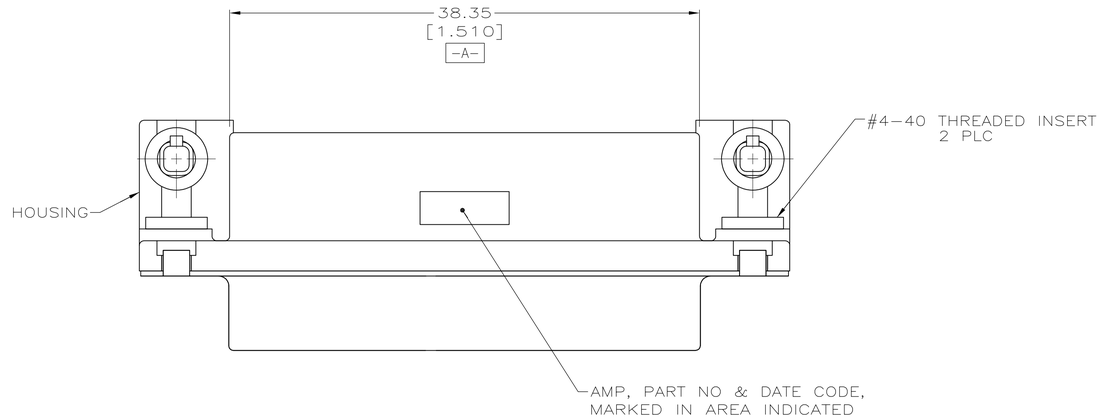

1. HOUSING & FACE COVER: NYLON, THERMOPLASTIC, UL 94VO RATED, BLACK; SHELL: CARBON STEEL PER ASTM A109; SOCKET CONTACTS: PHOSPHOR BRONZE; PER QQ-B-750; EYELETS: BRASS; THREADED INSERTS: ZINC; BOARDLOCKS: COPPER ALLOY.
2. SOCKET CONTACTS: GOLD PLATED FOR A LENGTH OF 1.27 [.050] MIN FROM MATING END, 0.76µm [.000030] MIN GOLD IN MATED AREA, 2.54µm[.000100] MIN TIN OR TIN-LEAD FOR A LENGTH OF 3.56[.140] MIN FROM OPPOSITE END, BOTH OVER 1.27µm[.000050] MIN NICKEL.
   EYELETS: 2.54µm [.000100] MIN TIN-LEAD OR TIN OVER COPPER FLASH.
   SHELL: 2.54µm [.000100] MIN TIN OVER 1.27µm [.000050] MIN COPPER.
   THREADED INSERTS: CLEAR CHROMATE.
   BOARDLOCKS: 3.81µm [.000150] MIN TIN-LEAD OVER 1.27µm [.000050] MIN NICKEL.
3. SOCKET CONTACTS: GOLD PLATED FOR A LENGTH OF 1.27 [.050] MIN FROM MATING END, GOLD FLASH IN MATED AREA, 2.54µm[.000100] MIN TIN OR TIN-LEAD FOR A LENGTH OF 3.56[.140] MIN FROM OPPOSITE END, BOTH OVER 1.27µm[.000050] MIN NICKEL.
   EYELETS: 2.54µm [.000100] MIN TIN-LEAD OR TIN OVER COPPER FLASH.
   SHELL: 2.54µm [.000100] MIN TIN OVER 1.27µm [.000050] MIN COPPER.
   THREADED INSERTS: CLEAR CHROMATE.
   BOARDLOCKS: 3.81µm [.000150] MIN TIN-LEAD OVER 1.27µm [.000050] MIN NICKEL.
4. DATUMS AND BASIC DIMENSIONS ESTABLISHED BY CUSTOMER.
5. POSITION TOLERANCE APPLIES AT CONTACT TIP.
6. BOARDLOCKS WILL ACCEPT .062 MAX PRINTED CIRCUIT BOARD THICKNESS.
7. COMPATIBLE WITH TYPICAL HIGH TEMPERATURE SOLDERING APPLICATIONS TO A MAXIMUM OF 225°C FOR A MAXIMUM DURATION OF 90 SECONDS. TEMPERATURE TO BE MEASURED ON CONNECTOR SURFACE.
8. SOCKET CONTACTS: GOLD PLATED FOR A LENGTH OF 1.27 [.050] MIN FROM MATING END, 0.76µm [.000030] MIN GOLD IN MATED AREA, 2.54µm[.000100] MIN TIN OR TIN-LEAD FOR A LENGTH OF 3.56[.140] MIN FROM OPPOSITE END, BOTH OVER 1.27µm[.000050] MIN NICKEL.
   EYELETS: 2.54µm [.000100] MIN TIN-LEAD OR TIN OVER COPPER FLASH.
   SHELL: 2.54µm [.000100] MIN TIN OVER 1.27µm [.000050] MIN COPPER.
   THREADED INSERTS: CLEAR CHROMATE.
   BOARDLOCKS: 3.81µm [.000150] MIN TIN OVER 1.27µm [.000050] MIN NICKEL.
9. OBSOLETE PARTS: OBSOLETE CIS STREAMLINING PER D.RENAUD/D.SINISI

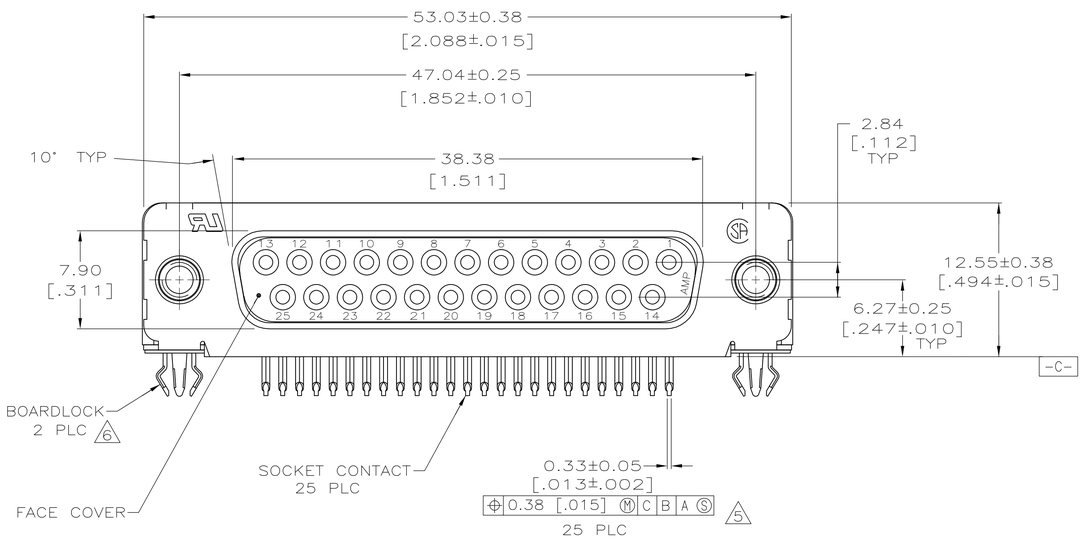

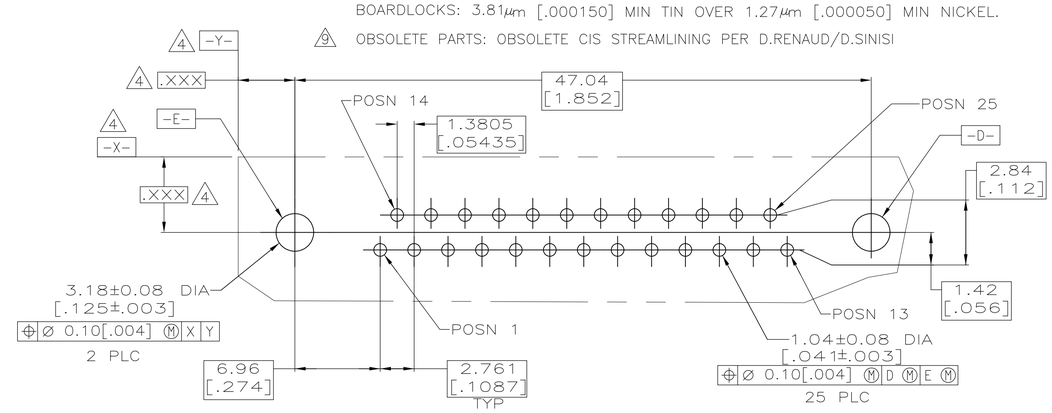

RECOMMENDED PC BOARD LAYOUT

1.57 [.062] PC BOARD THICKNESS

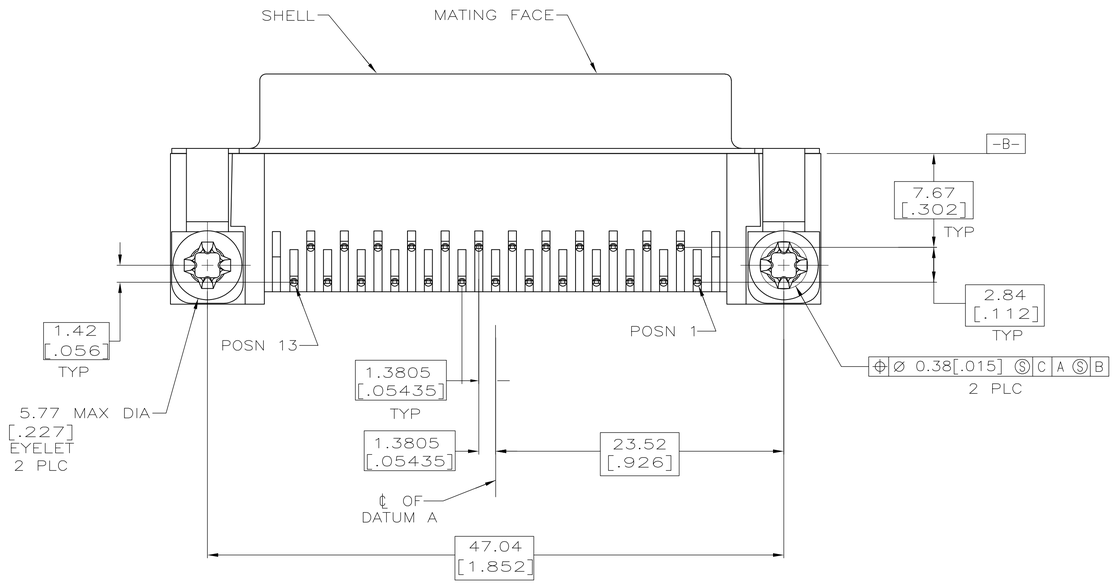

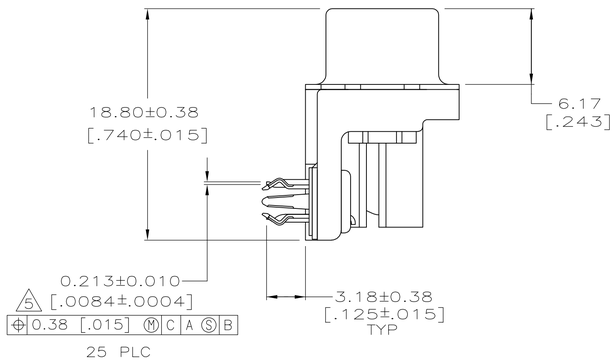

9	OBSOLETE	8	~~6-788800-7~~
SUP BY 5788800-2		3	788800-2
		2	788800-1
		FINISH	PART NUMBER

THIS DRAWING IS A CONTROLLED DOCUMENT.	DWN D.BROCKWAY 02 MAR 00	Tyco Electronics	Tyco Electronics Corporation Harrisburg, PA 17105-3608
DIMENSIONS: mm[INCHES]	CHK J.KOPPENHEFFER 03 MAR 00		
TOLERANCES UNLESS OTHERWISE SPECIFIED: 0 PLC ± - 1 PLC ± - 2 PLC ± 0.13 [.005] 3 PLC ± - 4 PLC ± - ANGLES ± -	APVD J.KOPPENHEFFER 03 MAR 00	NAME	RCPT ASSEMBLY, SIZE 3, .318 SERIES, WITH FRONT METAL SHELL, HIGH TEMPERATURE, AMPLIMITE™ HD-20
	PRODUCT SPEC 108-40025		
	APPLICATION SPEC 114-40010	SIZE A1	CAGE CODE 00779 / DRAWING NO C-788800 / RESTRICTED TO —
MATERIAL 1	FINISH SEE TABLE	WEIGHT —	
		CUSTOMER DRAWING	SCALE 4:1 / SHEET 1 OF 1 / REV B1