PART NAME	DIN RAIL MOUNT BOXES WITH TIERED CONTACTS	PART No.	DB-4751	REV. DATE	5-19-10

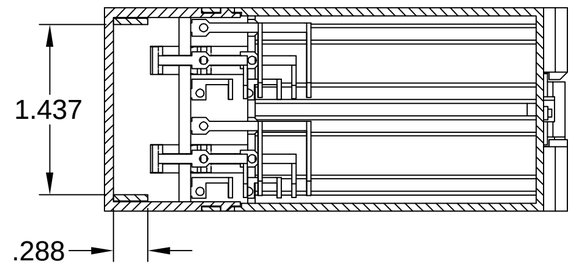

SECTION A-A

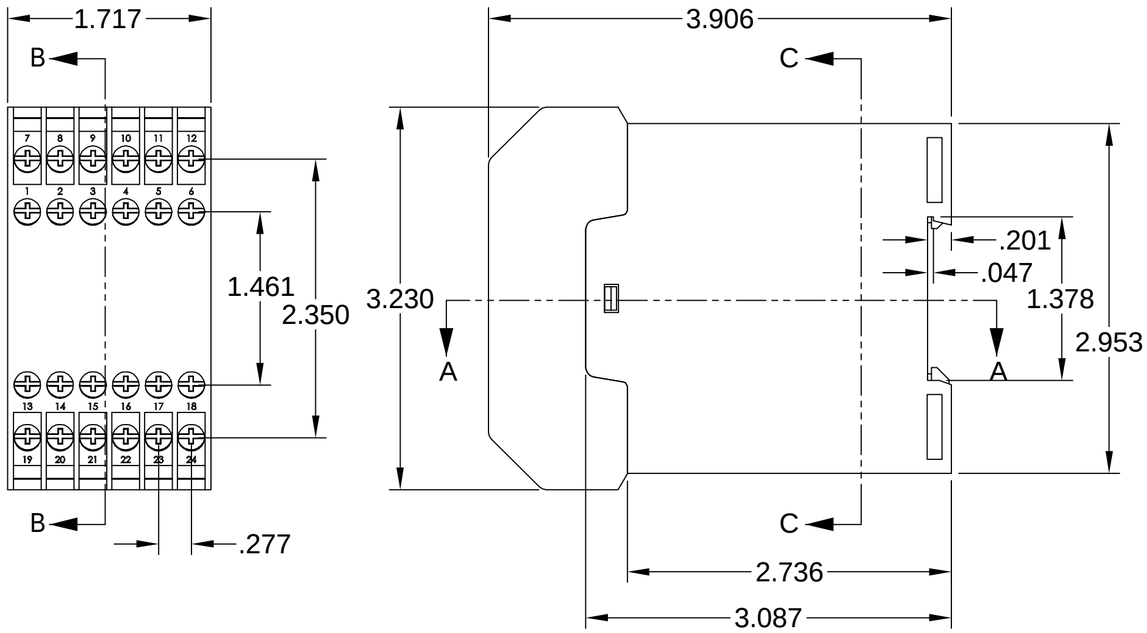

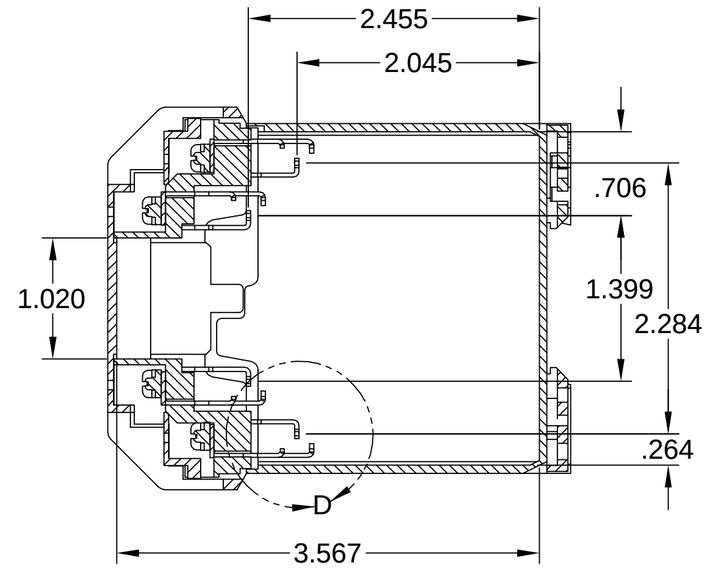

SECTION B-B

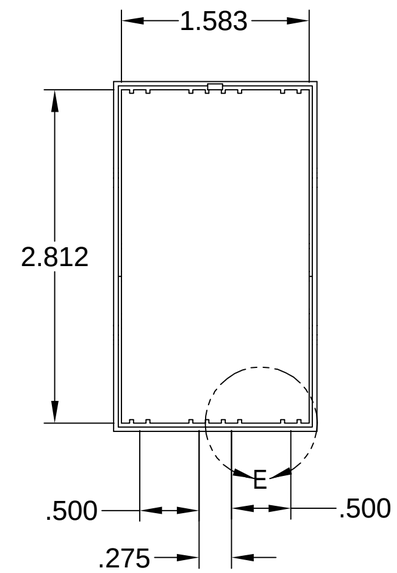

SECTION C-C

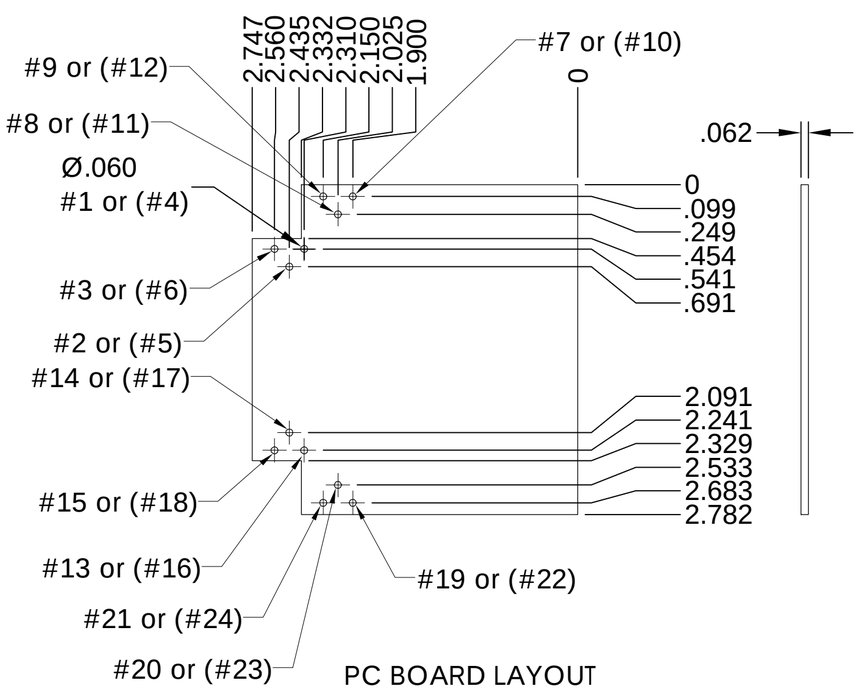

PC BOARD LAYOUT

NOTE: HOLE NUMBERS CORRESPOND TO CONTACT POSITION

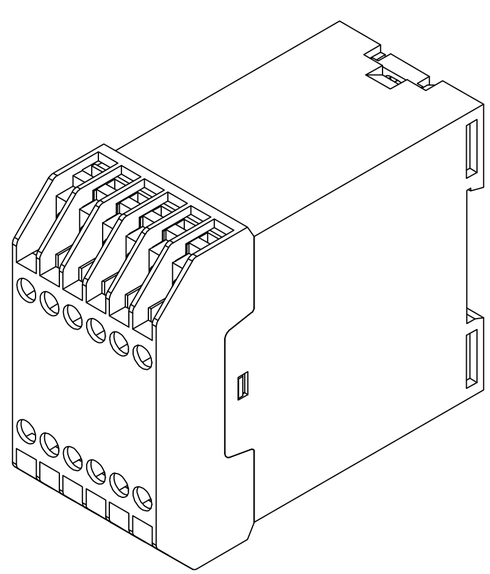

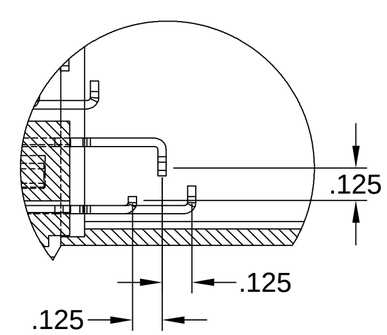

DETAIL D

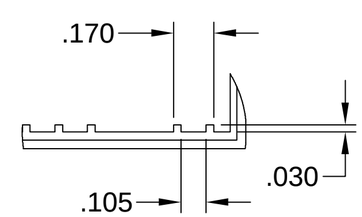

DETAIL E

MATERIAL: UL 94V-0 RATED ABS

FINISH: LIGHT GRAY

ALL DIMENSIONS HAVE A ±.015 TOLERANCE UNLESS OTHERWISE SPECIFIED

ALL CONTACTS ARE TIN PLATED BRASS RATED AT 10 AMPS