THIS DRAWING IS UNPUBLISHED. RELEASED FOR PUBLICATION -,- .
© COPYRIGHT - By - ALL RIGHTS RESERVED.

REVISIONS

P	LTR	DESCRIPTION	DATE	DWN	APVD
	J3	REVISED PER ECO-15-016493	27NOV2015	NK	DR

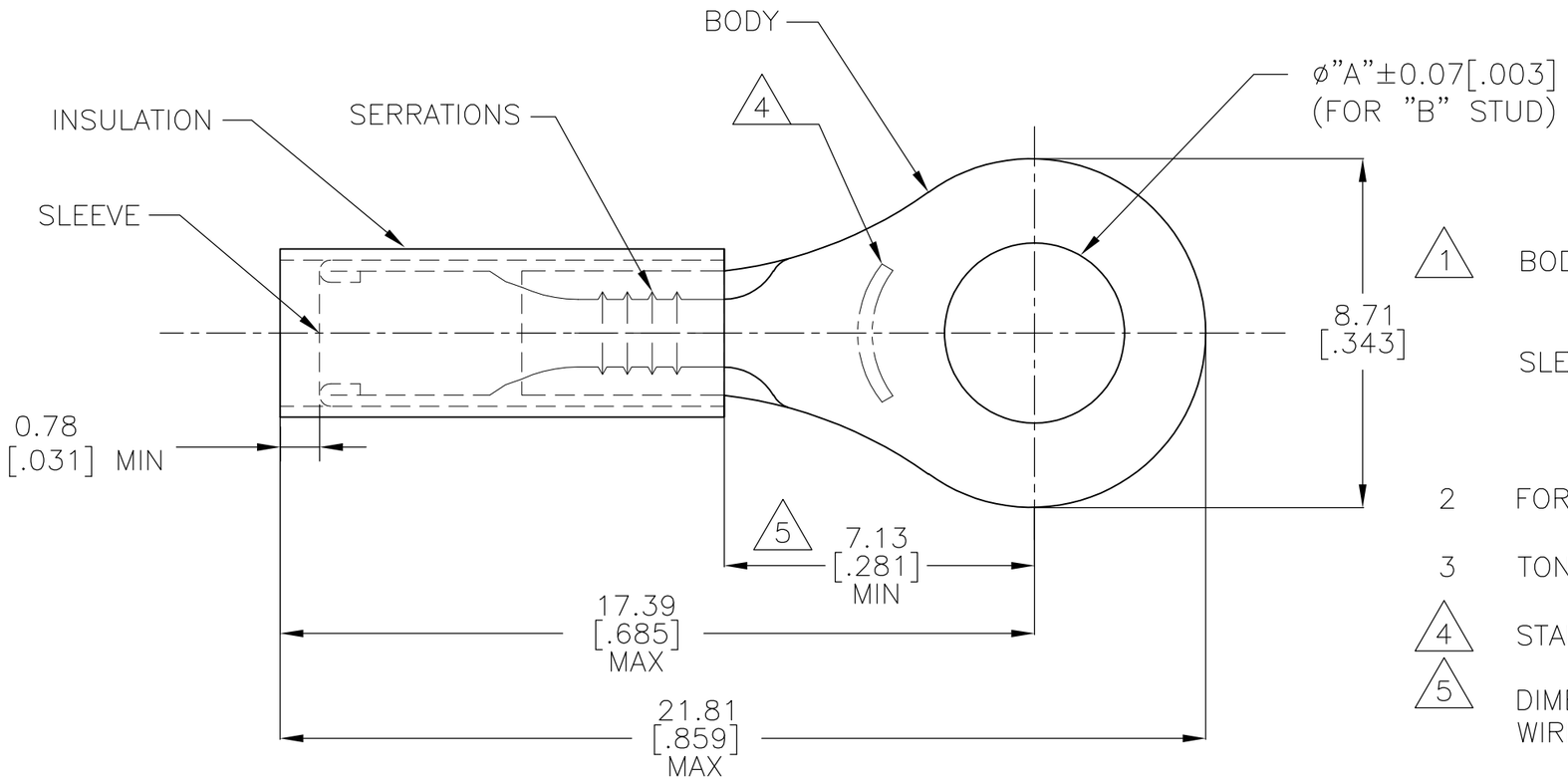

1 BODY: COPPER ASTM B152
NICKEL PL SAE AMS QQ-N-290
0.0076[.0003] AVG. EXT. THK
SLEEVE: COPPER ASTM B152
NICKEL PL SAE AMS QQ-N-290
0.00076[.00003] AVG EXT. THK

2 FOR 2.03[.080] TO 3.81[.150] WIRE INSULATION DIA.

3 TONGUE MATERIAL THK: 0.78±0.05 [.031±.002]

4 STAMP "AMP 14" APPROX AS SHOWN

5 DIMENSION APPLIES FROM EDGE OF METAL WIRE BARREL TO CENTER OF STUD HOLE

QTY	PACKAGE TYPE	"A"	"B"	PART NO.	INSULATION MATERIAL
PRELIMINARY 1000	LOOSE PIECE	5.0[.197]	#10	50840-5	PVDF COLOR: WHITE
PRELIMINARY 1000	LOOSE PIECE	4.34[.171]	M4[#8]	50840-4	PVDF COLOR: WHITE
1000	LOOSE PIECE	5.0[.197]	#10	50840-1	PTFE (ASTM D3295) COLOR: WHITE
1000	LOOSE PIECE	4.34[.171]	M4[#8]	50840	PTFE (ASTM D3295) COLOR: WHITE

AMP INCORPORATED
CUSTOMER SERVICE SYSTEMS

FOR ADDITIONAL PRODUCT INFORMATION OR COPIES OF DRAWINGS AND TECHNICAL DOCUMENTS	PRODUCT INFORMATION CENTER 1-800-522-6752
FOR APPLICATION TOOLING INFORMATION	TOOLING ASSISTANCE CENTER 1-800-722-1111
FOR ORDER ENTRY	1-800-526-5142

MAX RECOMMENDED OPERATING TEMPERATURE: 288°C [550°F]
VOLTAGE RATING: 300V MAX
CIRCULAR MIL AREA: 2.15mm²[4,234] STRANDED WIRE ONLY

THIS DRAWING IS A CONTROLLED DOCUMENT.

DIMENSIONS: mm [INCHES]

TOLERANCES UNLESS OTHERWISE SPECIFIED: REMOVE BURRS,BREAK SHARPE EDGES .015 R MAX
0 PLC ± -
1 PLC ± -
2 PLC ± 0.20 [.008]
3 PLC ± -
4 PLC ± -
ANGLES ± 5°

MATERIAL 1 SEE TABLE
FINISH 1 SEE TABLE

DWN NAGALAKSHMI K 13OCT2015
CHK MERCURIO MAURIZIO 13OCT2015
APVD MERCURIO MAURIZIO 13OCT2015
PRODUCT SPEC —
APPLICATION SPEC —
WEIGHT —

TE Connectivity

NAME
WIRE TERMINAL
PIDG™, STRATO-THERM, RING TONGUE
WIRE SIZE: 14

SIZE	CAGE CODE	DRAWING NO	RESTRICTED TO
A3	00779	C-50840	—

CUSTOMER DRAWING | SCALE NTS | SHEET 1 OF 1 | REV J3

1470-19 (1/15)