THIS DRAWING IS UNPUBLISHED. RELEASED FOR PUBLICATION -,- .
© COPYRIGHT - By - ALL RIGHTS RESERVED.

LOC	DIST
AF	50

REVISIONS

P	LTR	DESCRIPTION	DATE	DWN	APVD
	D1	REV PER ECO 12-020692	27NOV12	JR	PD

1 CONTINUOUS STRIP ON REELS.

2 0.00254 [.000100] MIN THK TIN OVER 0.00127 [.000050] MIN NICKEL

3 MATING TAB THK IS 0.635±0.025 [.025±.001].

4 REELED WITH INTERLEAVING

5 PRELIMINARY – NOT FOR PRODUCTION

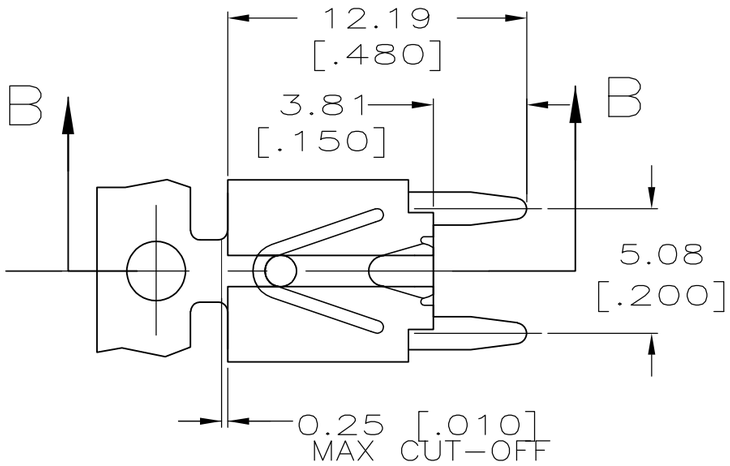

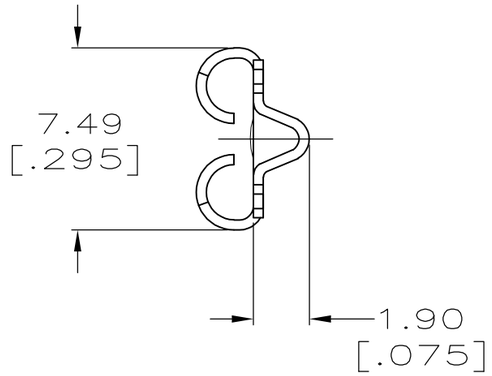

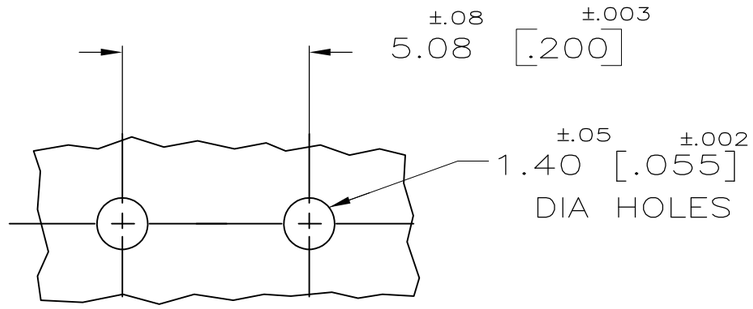

P.C.B. HOLES

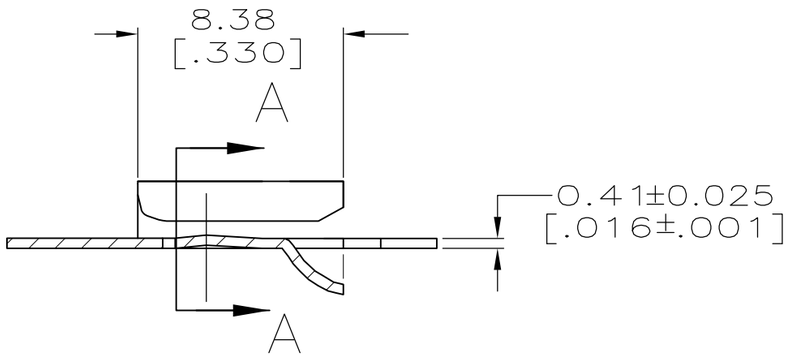

SECTION B–B

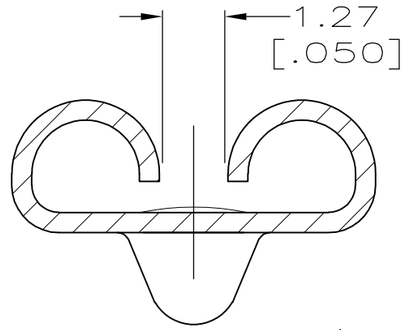

SECTION A–A
SCALE 8:1

4	5	
		63994–2
		63994–1
		PART NO.

THIS DRAWING IS A CONTROLLED DOCUMENT.

DIMENSIONS: MM [INCHES]

TOLERANCES UNLESS OTHERWISE SPECIFIED:

0 PLC	± –
1 PLC	± –
2 PLC	± 0.25 [.010]
3 PLC	± –
4 PLC	± –
ANGLES	± –

MATERIAL: H04 BRASS

FINISH: TIN OVER NICKEL 2

DWN	JR RUTH	3/12/97
CHK	MS FEHER	3/12/97
APVD	DAVE BRATINA	3/12/97
PRODUCT SPEC	—	
APPLICATION SPEC	—	
WEIGHT	—	

CUSTOMER DRAWING

TE Connectivity

NAME: RECEPTACLE, FASTON, 6.35/5.21 [.250/.205] SERIES, PC BOARD MOUNTED –

SIZE	CAGE CODE	DRAWING NO	RESTRICTED TO
A3	00779	C-63994	—

SCALE	SHEET	REV
4:1	1 OF 1	D1