DATE	DESCRIPTION	REV.
8.11.99	CHANGE AS PER ECN 99-056	A
6.8.05	CHANGE AS PER ECN 05-032	B
9.22.08	CHANGE AS PER ECN 08-162	C
12.15.09	CHANGE AS PER ECN 09-186	D
1.13.12	CHANGE AS PER ECN 12-006	E

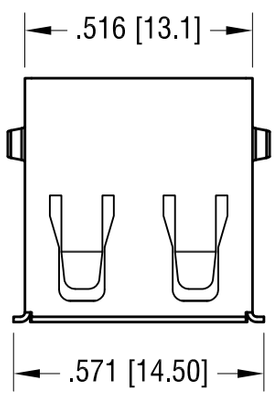

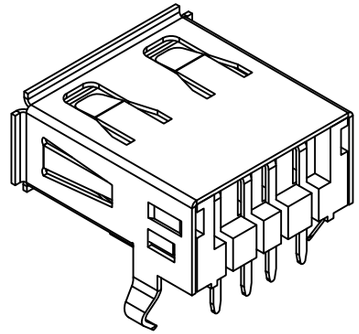

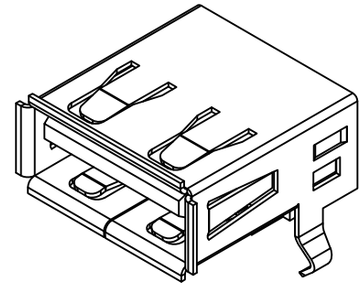

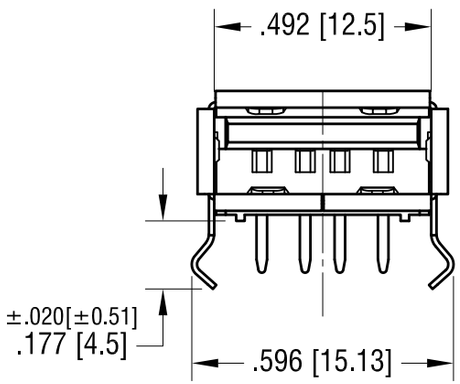

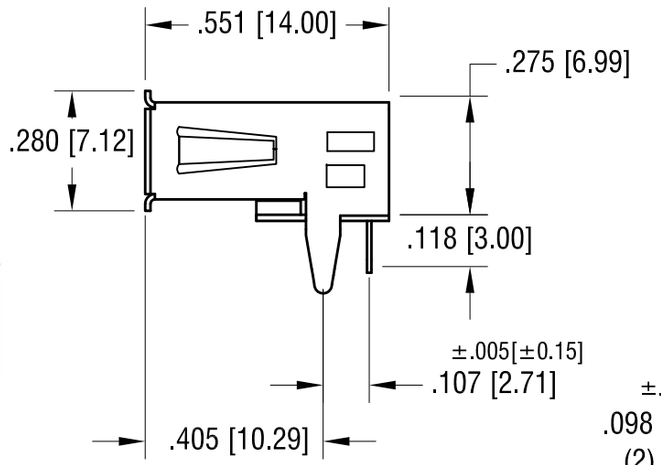

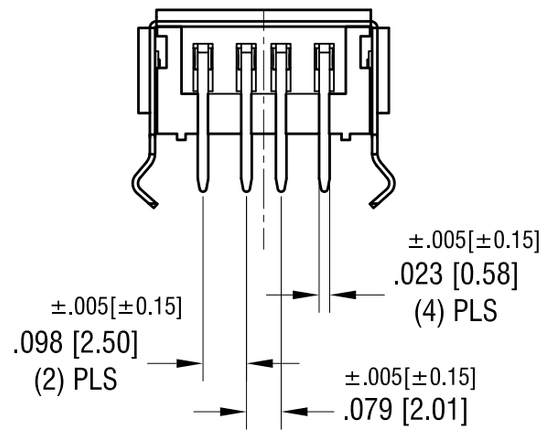

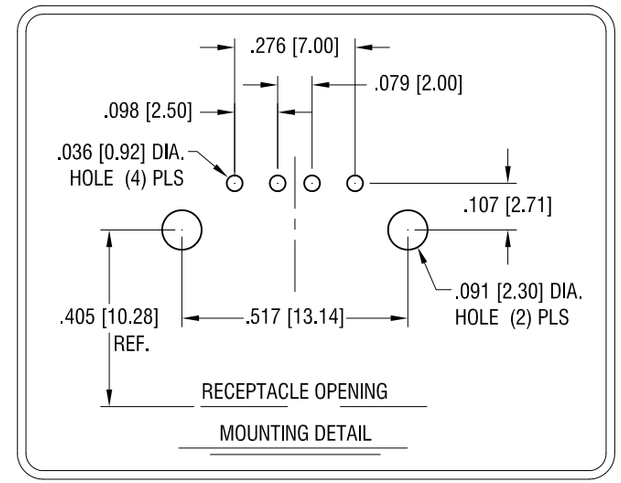

Notes:

Shell: Mat'l: Phosphor Bronze,
Finish: Tin Plate over Nickel Plate.
Insulator: Glass Filled LCP
Contacts: Mat'l: Phosphor Bronze
Finish: Contact Area -Gold Plate over Nickel Plate
Solder Tail - Tin Plate over Nickel Plate

Electrical Specifications
Contact Resistance: 30 milliohms Max.
Dielectric Withstanding Voltage: 500V AC
Insulation Resistance : 1000 Mohms Min.
Operating Temperature: -25°C to 85°C
Durability min. : 1500 cycles.

THIS DOCUMENT IS THE PROPERTY OF KEYSTONE ELECTRONICS CORP. AND SHALL NOT BE REPRODUCED, DISTRIBUTED OR USED AS A BASIS FOR MANUFACTURE WITHOUT PRIOR WRITTEN PERMISSION FROM KEYSTONE ELECTRONICS CORP.

KEYSTONE ELECTRONICS CORP.
www.keyelco.com • ASTORIA, N.Y. 11105-2017 • Tel (718) 956-8900

PART NAME: USB A-TYPE HORIZONTAL SOCKET

MATERIAL: AS NOTED

FINISH: AS NOTED

DRN BY: BOONE | DATE: 6.18.98

APP'D: LN | SCALE: 2.5X

TOLERANCES INCH [MM]
DECIMAL ± .010 [± 0.25]
ANGULAR ± 1°
UNLESS OTHERWISE SPECIFIED

CODE: C/M

DWG NO. 921