THIS DRAWING IS UNPUBLISHED. RELEASED FOR PUBLICATION - ,N/A .
© COPYRIGHT N/A By - ALL RIGHTS RESERVED.

REVISIONS

P	LTR	DESCRIPTION	DATE	DWN	APVD
	U	REVISED PER ECO-19-002868	5-2-19	CT	RL

1. THIS PLUG WILL MATE WITH ANY 24C7, SIZE 5 RECEPTACLE IN AMPLIMITE SERIES.
2. MAXIMUM WIRE INSULATION TO BE USED WITH THIS PLUG IS ø.068.
3. THIS CONNECTOR ACCEPTS (7) POWER 8, OR COAX PIN CONTACTS IN POSITIONS A1 THRU A7, PURCHASED SEPARATELY.
4. THIS CONNECTOR ACCEPTS SIZE 20 PIN SIGNAL CONTACTS IN POSITIONS 1 THRU 17.
5. INSERTION/EXTRACTION TOOL USED FOR SIZE 20 PIN SIGNAL CONTACTS IS 91067-2.

6. FINISH: CADMIUM PLATED PER QQ-P-416.
7. FINISH: TIN PER ASTM-B-545, .000400 MIN THK OVER COPPER PER AMS2418, .000050 MIN THK.
8. FINISH: GOLD PLATED PER MIL-G-45204 TYPE II, GRADE C, CLASS 1 OVER COPPER PER MIL-C-14550, CLASS IV.
9. STEEL PER ASTM-A-109.
10. BRASS PER MIL-C-50 AND ASTM-B-36 UNS NO. C26000.
11. INK STAMP WESTINGHOUSE PART NO: 97942-645A9356H04, FAR SIDE.
12. UL/CSA DESIGNATION STAMPED IN THIS AREA.
13. FINISH: ZINC PLATE PER ASTM-B-633, .000200-.000400 THK WITH SUPPLEMENTARY CHROMATE (Cr3+)

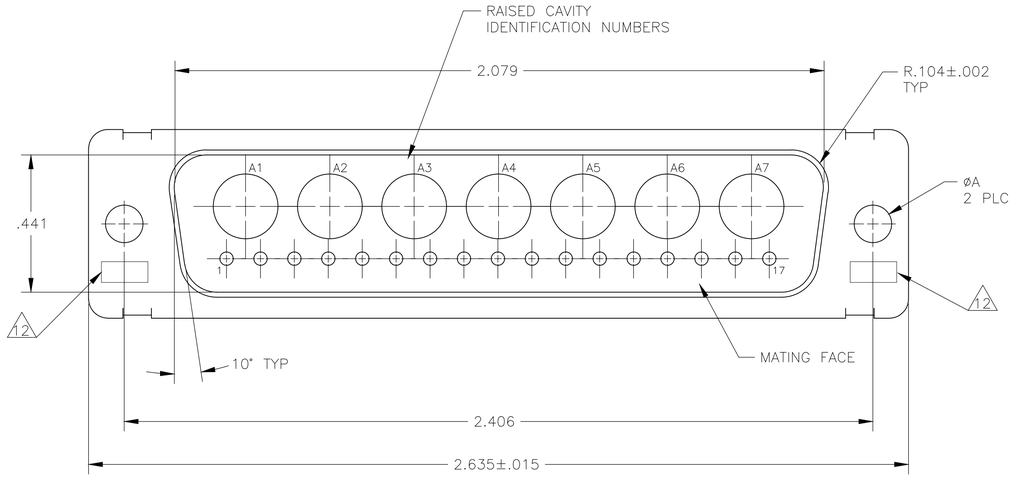

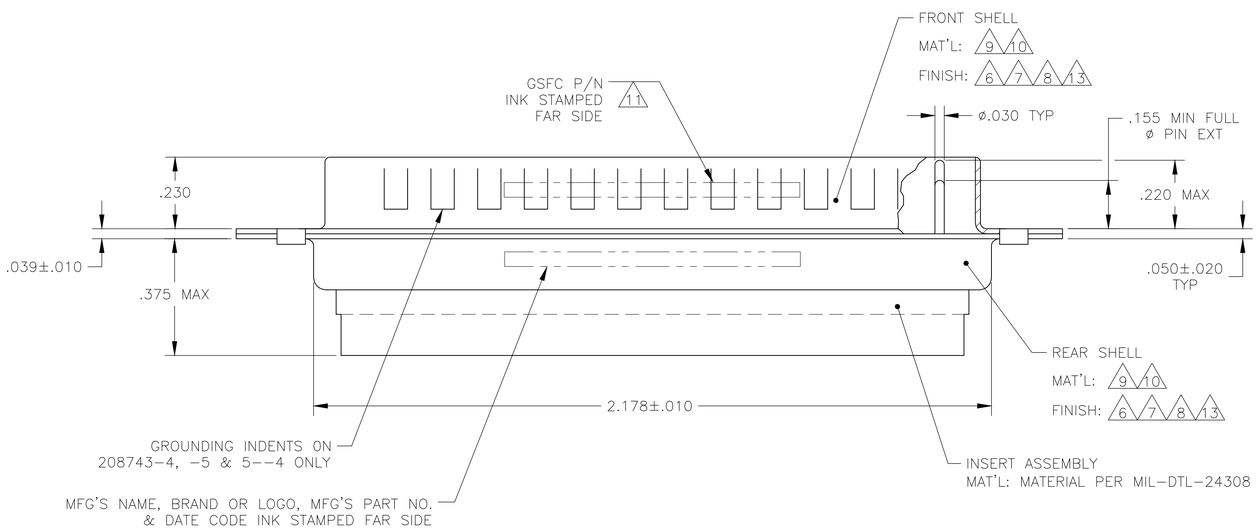

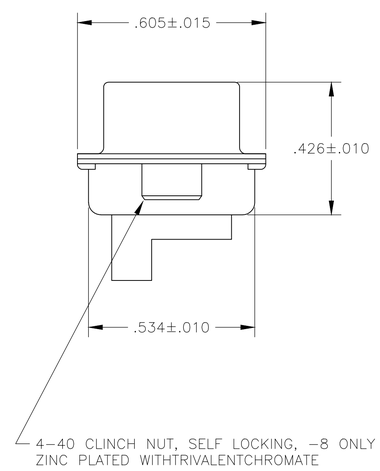

9 7	.120	–	5-208743-4
9 13	.120	–	5-208743-1
9 7	–	–	208743-8
9 7	.120	–	208743-7
8 10	.154	311P405-22S-B-15	208743-6
9 7	.120	–	208743-5
7 9	.120	–	208743-4
6 9 11	.120	–	208743-3
8 10	.120	311P405-22S-B-12	208743-2
6 9	.120	–	208743-1
REMARKS	øA	GSFC P/N	MFG'S PART NO.

THIS DRAWING IS A CONTROLLED DOCUMENT.

DIMENSIONS: INCHES

TOLERANCES UNLESS OTHERWISE SPECIFIED:
0 PLC ± –
1 PLC ± –
2 PLC ± –
3 PLC ± .005[0.13]
4 PLC ± –
ANGLES ± 0°30'

MATERIAL –
FINISH –

DWN 27-May-15 MANJUNATH G M
CHK 27-May-15 CHARLES THOMAS
APVD 27-May-15 CHARLES THOMAS
PRODUCT SPEC —
APPLICATION SPEC —
WEIGHT 0.000000

TE Connectivity Ltd.

NAME
PLUG ASSEMBLY
AMPLIMITE 24C7
SIZE 5, COAX MIX

SIZE	CAGE CODE	DRAWING NO	RESTRICTED TO
A1	00779	C-208743	—

CUSTOMER DRAWING SCALE 4:1 SHEET 1 OF 1 REV U

4805 (1/15)