AFCI CONFIDENTIAL

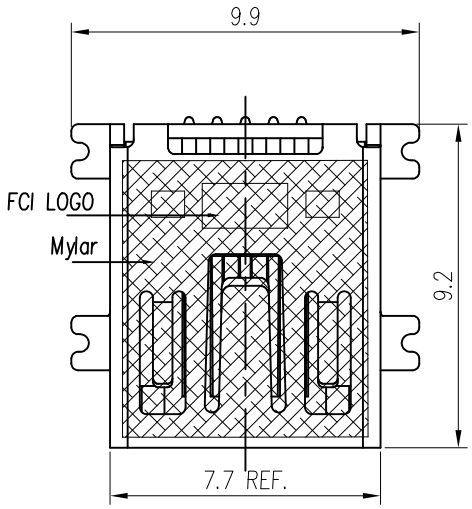


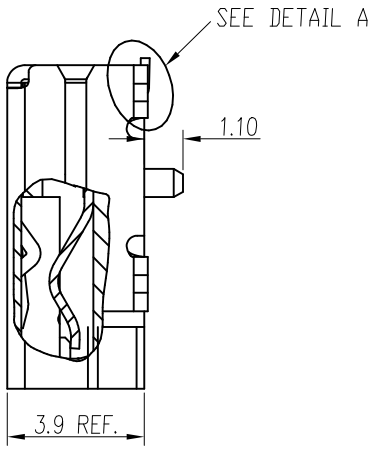


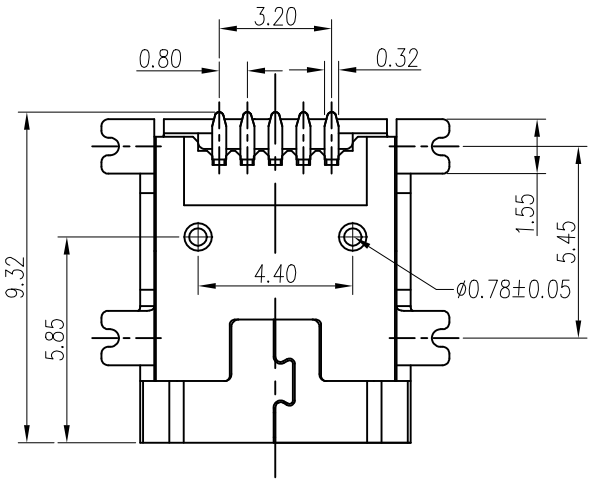


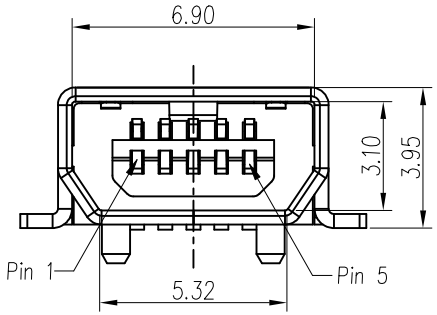


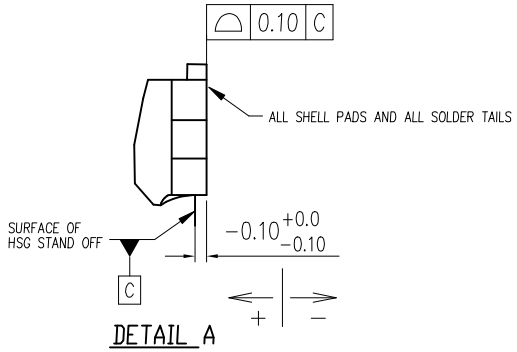


| mat'l. code | | | | surface ISO 1302 | tolerance ISO 406 ISO | projection 1101 | product family USB 3.0 |
|---|---|---|---|---|---|---|---|
| ltr | ecn no | dr | date | tolerances unless otherwise | | specified | title |
| F | T06-0074 | A.C | 04/10/2006 | angles | linear .0±.30 | mm | MINI USB AB TYPE RECEPTACLE |
| G | T06-0201 | A.C | 12/14/2006 | | .00±.10 | | COONECTOR, R/A SMT TYPE |
| H | T09-1090 | J.H | 06/22/2009 | 0°±2° | .000±.05 | scale 1:1 | |
| J | T10-0095 | J.H | 12/27/2010 | dr JASMINE CHAING | 9/09/03 | | dwg no 10033527 sheet 1 of 2 size A3 |
| K | T-004677 | J.H | 07/27/2011 | engr ALLEN CHANG | 6/16/08 | | |
| L | ELX-N-007323 | A.ZH | 10/25/2011 | chr ROGER LIN | 6/16/08 | | |
| M | ELX-N-32375 | YY | 01/08/2019 | appd JAMES HSU | 6/16/08 | | type Product Customer Drawing |
| sheet index | revision | M | | | | | |
| | sheet | 1/2 | | | | | |

This document is the property of and embodies CONFIDENTIAL and PROPRIETARY information of AFCI. No part of the information shown on this document may be used in any way or disclosed to others without the written consent of AFCI. © 2005 AFCI

PROD NO
SEE NOTES

NOTES:

1.MATERIAL:
HOUSING: HIGH TEMP THERMOPLASTIC, GLASS FIBER FILLED.
UL 94V-0 RATED, COLOR IN BLACK.
CONTACT: COPPER ALLOY.
SHELL: COPPER ALLOY.

2.FINISH:
CONTACT: UNDERPLATED 50u" MIN. NICKEL OVER ALL
100u" MIN. MATTE TIN PLATED IN SOLDERING AREA FOR LEAD FREE VERSION.
SELECTIVE GOLD PLATED IN CONTACT AREA.
SHIELD: N: NICKEL 40u"~120u" PLATED OVERALL.
T: SELECTIVE 60u" MIN. MATTE TIN ON LEGS OVER 40u"~120u" NICKEL.

3. 10033527-X3212XLF: THE HOUSING WILL WITHSTAND EXPOSURE TO 260°
PEAK TEMPERATURE FOR 10 SECONDS IN A IR REFLOW APPLICATION.
AND THIS PRODCUT MEETS EUROPEAN UNION DIRECTIVES AND OTHER
COUNTRY REGULATIONS AS DESCRIBED IN GS-22-008.

4. PRODUCT SPEC: GS-12-174; PACKAGE SPEC: GS-14-873

5. PART NUMBER 10033527N3112LF TO BE EQUAL TO 10033527-T3112LF WITH Ni+Sn PLATING.
PART NUMBER 10033527N3212LF TO BE EQUAL TO 10033527-T3212LF WITH Ni+Sn PLATING.

6. PRODUCT ORDERING DATA :

10033527 - X X X X X M LF

- LF: LEAD FREE PLATING
- M: WITH MYLAR
  BLANK: WITHOUT MYLAR
- PACKAGING METHOD:
  2: TAPE & REEL PACKAGING.
- POST OPTION:
  1 : WITH PLASTIC POST.
- HSG MATERIAL:
  1 OR 2: HIGH TEMP THERMOPLASTIC.
- PLATING IN CONTACT AREA:
  1 : GOLD FLASH
  3 : 30u" Au.
- N: NICKEL FOR SHIELD.
  T: SELECTIVE TIN ON LEGS.
- SEE NOTE 5 FOR THE SPECIFIC P/N ASSIGNMENT FOR SPECIFIC CUSTOMER

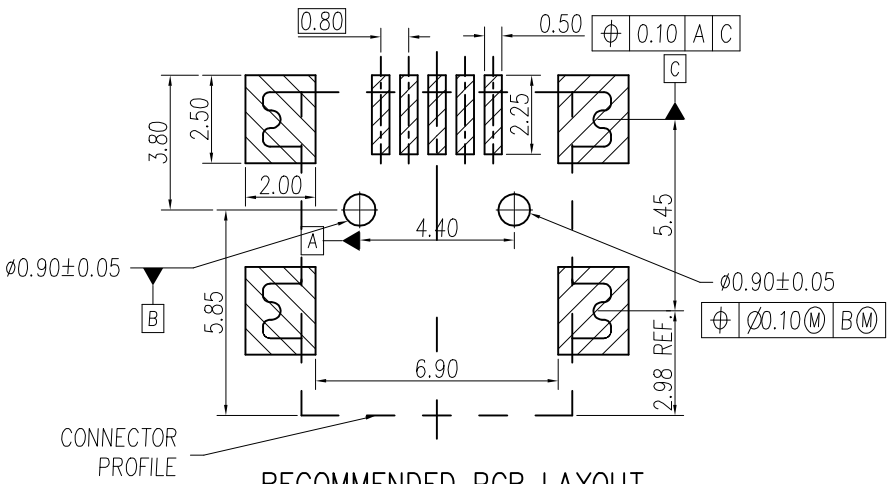


RECOMMENDED PCB LAYOUT
COMPONENT SIDE

| mat'l. code | | | | surface ISO 1302 | tolerance ISO 406 ISO 1101 | projection | product family USB 3.0 |
|---|---|---|---|---|---|---|---|
| ltr | ecn no | dr | date | tolerances unless otherwise specified | | | title |
| M | | | | angles | linear .0±.30 | mm | MINI USB AB TYPE RECEPTACLE |
| | | | | 0°±2° | .00±.10 | | COONECTOR, R/A SMT TYPE |
| | | | | | .000±.05 | scale 1:1 | |
| | | | | dr | JASMINE CHAING 9/09/03 | | dwg no sheet2 of 2 size |
| | | | | engr | ALLEN CHANG 6/16/08 | | 10033527 A3 |
| | | | | chr | Li-Qing Lei 6/16/08 | | |
| | | | | appd | Tim Yao 6/16/08 | | type Product Customer Drawing |
| sheet index | revision | M | | | | | |
| | sheet | 2/2 | | | | | |

AFCI CONFIDENTIAL

This document is the property of and embodies CONFIDENTIAL and PROPRIETARY information of AFCI. No part of the information shown on this document may be used in any way or disclosed to others without the written consent of AFCI.