| MATERIAL NUMBER | ENGINEERING NUMBER | MATERIAL NUMBER ON TAPE | ENGINEERING NUMBER ON TAPE | WIRE SIZE AWG | INSULATION COLOR | TERMINAL ID MIN | MAX. WIRE INSUL. DIA. | | LENTH "L" MAX | "H" ±.010/0.25 |
|---|---|---|---|---|---|---|---|---|---|---|
| | | | | | | | STANDARD END | FUNNEL END | | |
| 192020063 | A-945-DK | 192020007 | A-945-DKT | 18-22 | DK RED | .062/1.57 | .161/4.09 | .147/3.74 | 1.070/27.18 | 1.522/38.67 |
| 192020019 | B-931-DK | 192020021 | B-931-DKT | 14-16 | DK BLUE | .081/2.57 | .199/5.05 | .185/4.70 | 1.070/27.18 | 1.524/38.71 |
| 192020039 | C-946-DK | 192020041 | C-946-DKT | 10-12 | DK YELLOW | .131/3.33 | .276/7.01 | .261/6.63 | 1.150/29.21 | 1.561/39.65 |

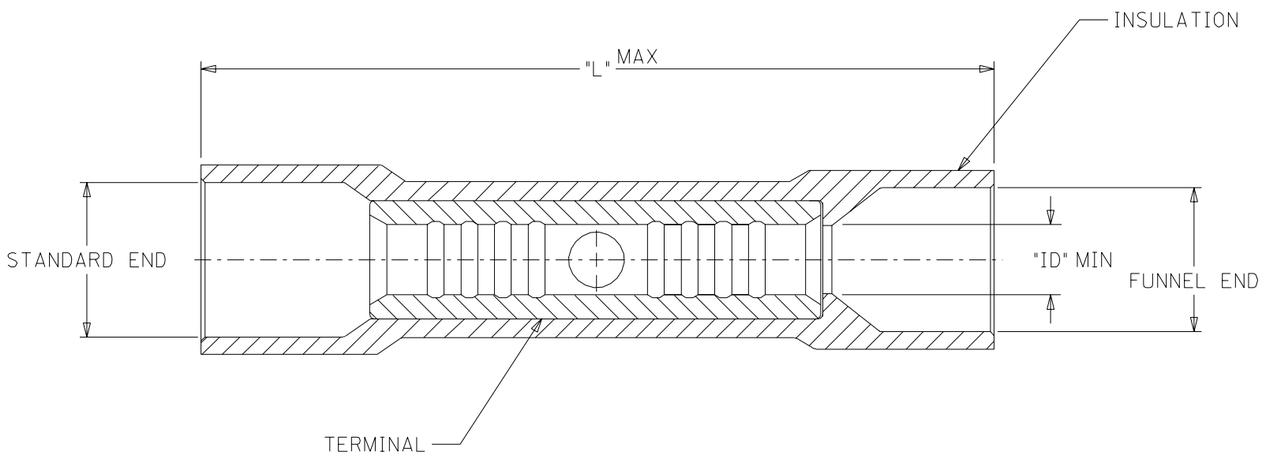


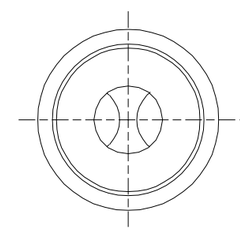

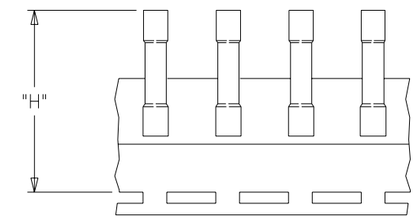


PARTS ON TAPE

# SALES DRAWING

NOTES:
1. MATERIAL: COPPER.
2. PLATING: ELECTRON-TIN.
3. INSULATION: 6/6 NYLON

| REV | DESCRIPTION |
|---|---|
| A | NEW RELEASE<br>EC NO. ETC2004-0207<br>DRWN: BRE 04/04/23<br>CH'K: HEB 04/04/23<br>APPR: RWD 04/04/23 |

QUALITY SYMBOLS
MAJOR =0
CRITICAL (C) =0

GENERAL TOLERANCES: (UNLESS SPECIFIED)

| | mm | INCH |
|---|---|---|
| 4 PLACES | ±0. | ±. |
| 3 PLACES | ±0. | ±.005 |
| 2 PLACES | ±0.13 | ±.01 |
| 1 PLACE | ±0.25 | ±. |
| ANGULAR: ±1/2° | | |

DRAFT WHERE APPLICABLE MUST REMAIN WITHIN DIMENSIONS

SCALE 4:1
DESIGN UNITS ☐ mm ☒ INCH
THIRD ANGLE PROJECTION
DIMENSIONS: ☐ mm/INCH ☒ INCH/mm ☐ mm ONLY
SHT REV
REVISE ON CAD ONLY

DRAWN BY & DATE BRE 04/04/20
CHECKED BY & DATE HEB 04/04/20
APPROVED BY & DATE RWD 04/04/20

TITLE: FUNNEL ENTRY NYLON BUTTED BUTT SPLICES

molex MOLEX INCORPORATED

CAD FILENAME SD-19202-002 .DGN
MATERIAL NO. SEE CHART
DRAWING NO. SD-19202-002
SHEET NO. 1 OF 1

THIS DRAWING CONTAINS INFORMATION THAT IS PROPRIETARY TO MOLEX INCORPORATED AND SHOULD NOT BE USED WITHOUT WRITTEN PERMISSION.

SIZE B