VL Electronics

Varitronix

*a subsidiary of **Varitronix** International Group*

3250 Wilshire Blvd, suite 1901 • Los Angeles • CA 90010-1502

Voice: (213) 738-8700 • Fax: (213) 738-5340 • E-mail: sales@vle.com

16 CHARACTERS X 2 LINES
CHARACTER SIZE: 2.95W X 4.85H mm (5 X 7 DOTS)
2.95W X 5.55H mm (5 X 8 DOTS)

MDL(S)-16265B

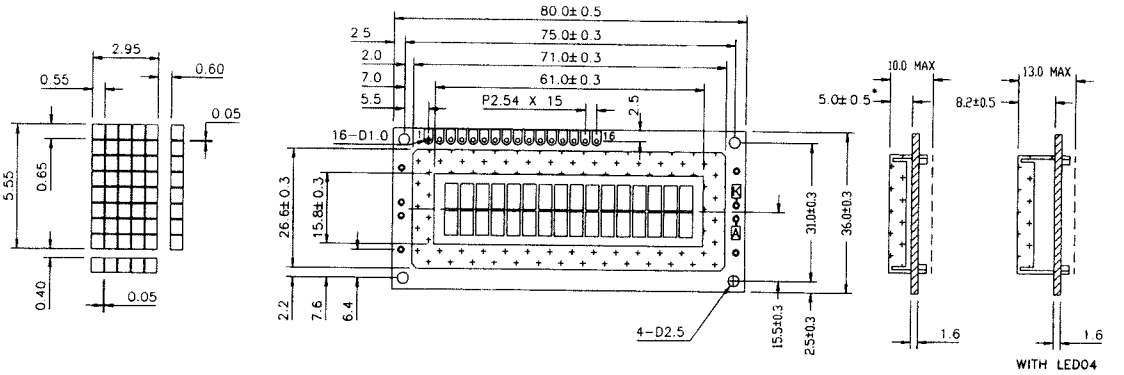

14 PIN CONNECTION	1	2	3	4	5	6	7	8	9	10	11	12	13	14	K	A
16 PIN CONNECTION	1	2	3	4	5	6	7	8	9	10	11	12	13	14	15	16
	VSS	VDD	V0	RS	R/W	E	DB0	DB1	DB2	DB3	DB4	DB5	DB6	DB7	LED(-)	LED(+)

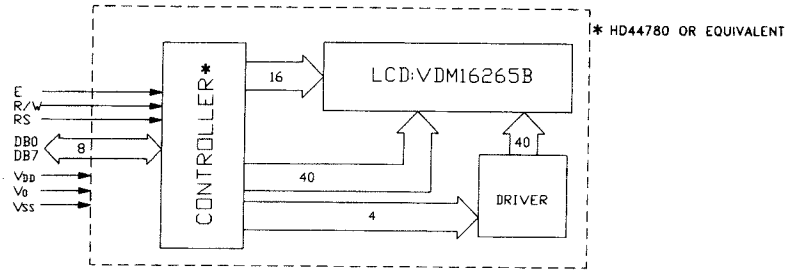

16 CHARACTERS X 2 LINES
CHARACTER SIZE: 2.95W X 4.85H mm (5 X 7 DOTS)
2.95W X 5.55H mm (5 X 8 DOTS)

MDL(S)-16265BHD

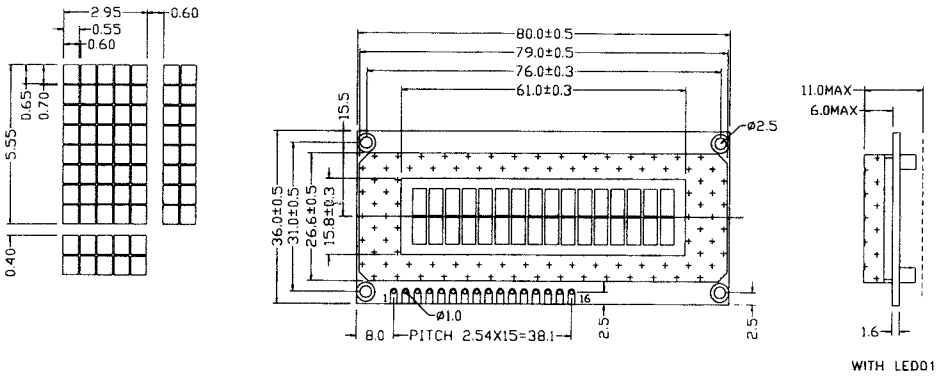
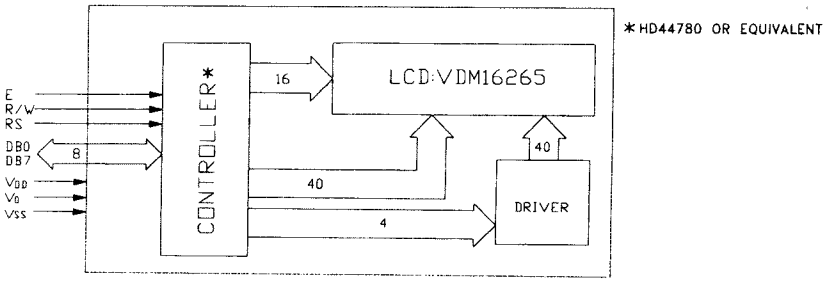
16 PIN CONNECTION	1	2	3	4	5	6	7	8	9	10	11	12	13	14	15(K)	16(A)
	VSS	VDD	V0	RS	R/W	E	DB0	DB1	DB2	DB3	DB4	DB5	DB6	DB7	LED(-)	LED(+)