BILL OF MATERIALS				
DET.	QTY.	DESCRIPTION	MATERIAL	PLATING
1	1	SPRING\CONTACT	BE CU	NICKEL
		BODY	BRASS	NICKEL
3	1	SCREW	BRASS	NICKEL
4	1	HANDLE	---	---

REVISIONS				
SYM	DESCRIPTION	REVISED BY	DATE	APPR

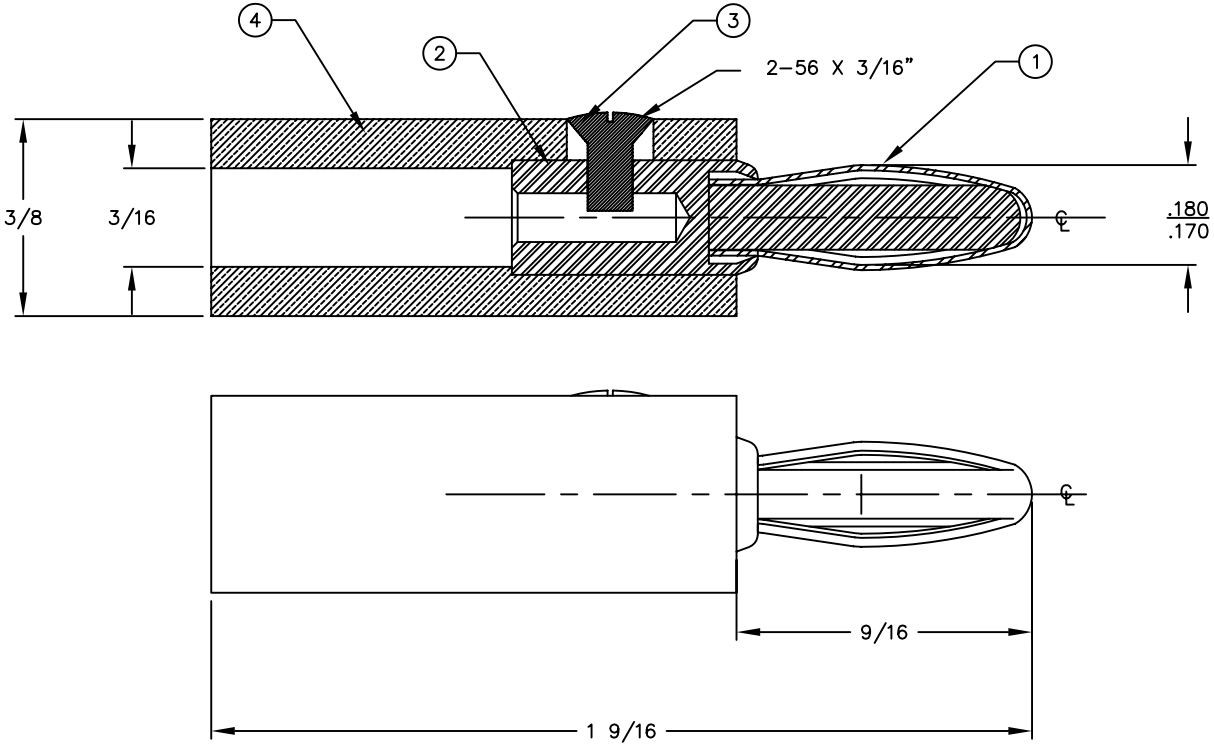

BANANA PLUG ASSEMBLY	
PART NO.	COLOR
204-101	WHITE
204-102	RED
204-103	BLACK
204-104	BLUE
204-105	GREEN
204-107	YELLOW

MATERIAL "SEE TABLE"		FINISH "SEE TABLE"	
DIMENSIONAL TOLERANCES UNLESS OTHERWISE SPECIFIED		TITLE 204-10X BANANA PLUG ASSEMBLY	**ABBATRON** Electronic Connectors and Hardware 632 Arch Street, Meadville, Pa. 16335
.XX / .XXX / .XXXX			
--- / ---			
FRACTIONS / ANGLES / SCALE			
--- / --- / 4:1		DRAWN: S. GERHOLD DATE 8-9-95	SIZE B / DRAWING NUMBER 204 / ISSUE C
HEAT TREAT		CHECKED: DATE	
PLOT SCALE: 1:1		APPROVED: DATE	