PART NUMBER CODING
G_E__DHHN-T9_1

MATERIAL (INSULATOR / CONTACT)
G = NYLON 9T / PHOSPHOR BRONZE

PLATING
(ALL PLATINGS ARE LEAD FREE AND HAVE 50µ" NICKEL UNDERPLATE)

CONTACT SURFACE	TERMINATION
W = GOLD FLASH	.000100" PURE TIN, MATTE
B = .000010" GOLD	.000100" PURE TIN, MATTE
C = .000030" GOLD	.000100" PURE TIN, MATTE

POSITIONS
18
32
49
82

COLOR
1 = BLACK

TAIL LENGTH
1 = 2.30[.091] (FOR 1.57[.062] PCB)
2 = 2.54[.100] (FOR 1.57[.062] PCB)
3 = 3.10[.122] (FOR 2.36[.093] PCB)

REVISIONS

REV.	ECO. NO	DESCRIPTION	DATE	BY
H	2920	REMOVE MATERIAL CODE 'N'	2/13/2014	JHSU
J	3048	ADD NOTE 13 FOR 'N' MATERIAL CODE	8/12/2014	JHSU
K	3665	UPDATE PROCESSING TEMPERATURE	04/20/2017	LH

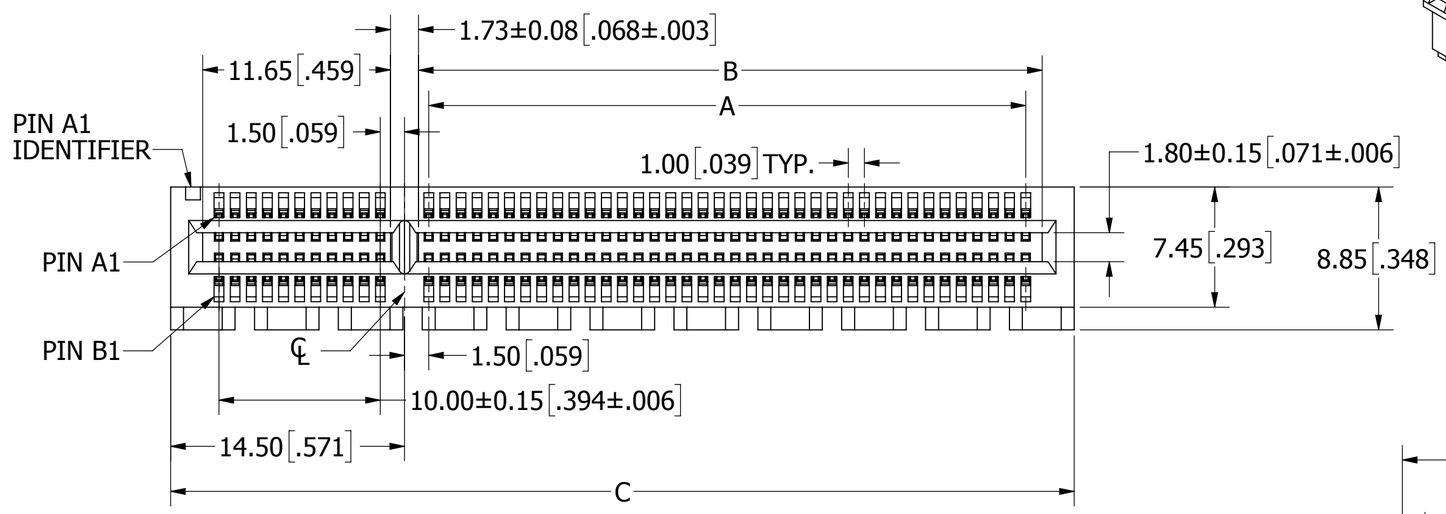

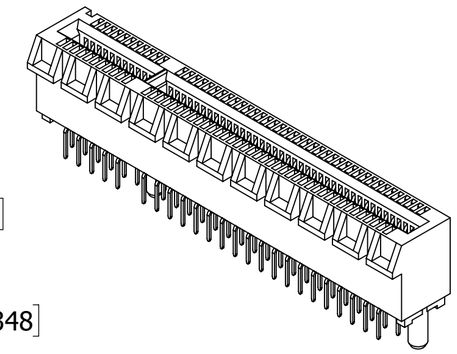

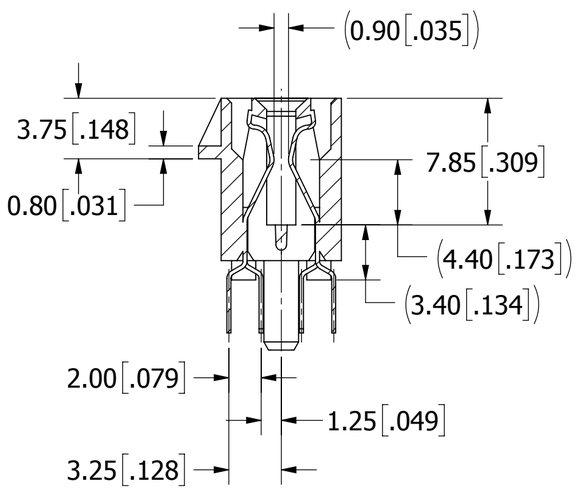

SECTION A-A

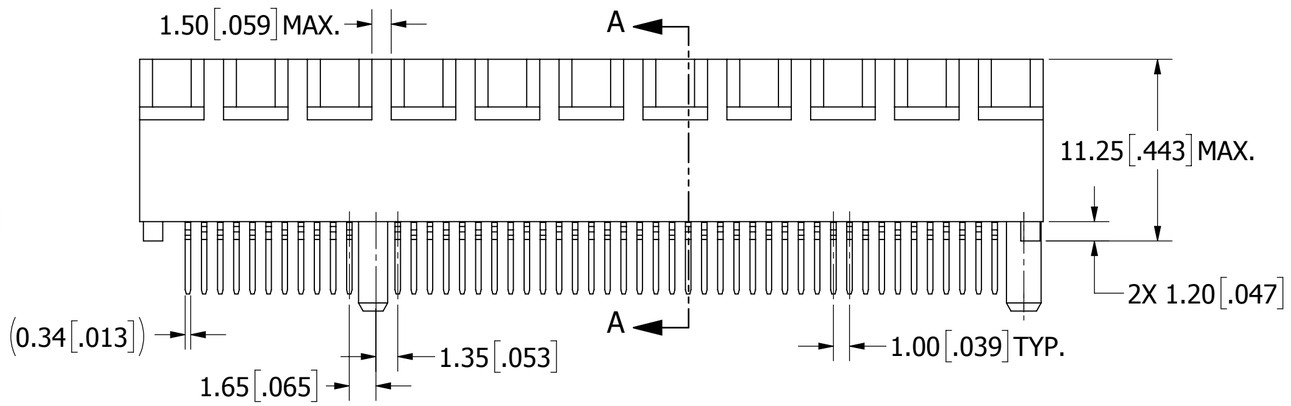

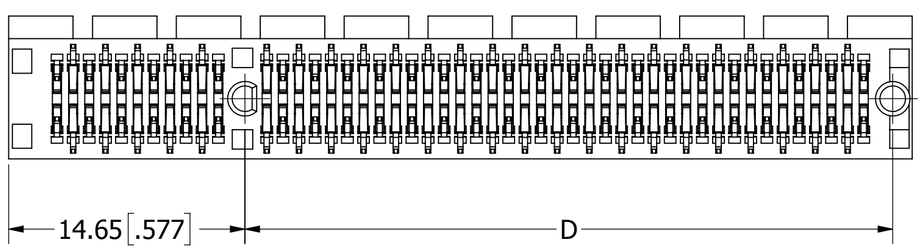

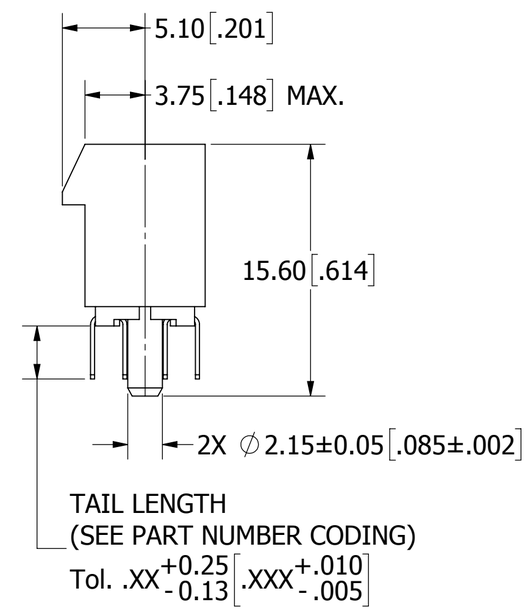

NOTES:
1. INSULATOR MATERIAL: NYLON 9T, UL 94V-0.
2. CONTACT MATERIAL: PHOSPHOR BRONZE.
3. CONTACT PLATING: SEE PART NUMBER CODING.
4. CURRENT RATING: 1.1 AMP PER CONTACT.
5. VOLTAGAE RATING 50 V AC.
6. INSULATOR RESISTANCE: 1000 MEGOHMS MIN.
7. CONTACT RESISTANCE: 30 MILLI OHMS MAX.
8. DIELECTRIC WITHSTANDING: 500 V AC.
9. INSERTION FORCE: 117.3gf (1.15 N) MAX PER CONTACT PAIR USING A 1.70 mm (.067") STEEL CARD.
10. WITHDRAWAL FORCE: 15.31gf (0.15 N) MIN PER CONTACT PAIR USING A 1.44 mm (.057") STEEL CARD.
11. OPERATING TEMPERATURE: -10° C TO +85° C.
12. PROCESSING TEMP: WAVE/MANUAL SOLDERING ONLY.
13. MATERIAL CODE 'N' EQUIVALENT TO 'G'.

PART NUMBER	POSITIONS/ CONTACTS	A ± 0.15 [.006]		B +0.20/-0.15 [+.008/-.006]		C ± 0.30 [.012]		D ± 0.10 [.004]	
		MM	[INCH]	MM	[INCH]	MM	[INCH]	MM	[INCH]
G_E18DHHN-T9_1	18/36	6.00	0.236	7.65	0.301	25.00	0.984	9.15	0.360
G_E32DHHN-T9_1	32/64	20.00	0.787	21.65	0.852	39.00	1.535	23.15	0.911
G_E49DHHN-T9_1	49/98	37.00	1.457	38.65	1.522	56.00	2.205	40.15	1.581
G_E82DHHN-T9_1	82/164	70.00	2.756	71.65	2.821	89.00	3.504	73.15	2.880

RoHS COMPLIANT

UNLESS OTHERWISE SPECIFIED:
DIMENSIONS ARE IN MM[INCHES]

TOLERANCES:

ANGULAR: ± 3°

DECIMALS
.X= ± 0.35 [.014]
.XX= ± 0.25 [.010]
.XXX= ± 0.08 [.0031]

DRAWN	DATE	NAME
	03/09/2009	JH

THE INFORMATION HEREIN CONTAINS PROPIETARY INFORMATION OF SULLINS ELECTRONICS AND IS NOT TO BE REPRODUCED, USED OR DISCLOSED TO OTHERS FOR ANY PURPOSE EXCEPT AS SPECIFICALLY AUTHORIZED IN WRITING BY AN OFFICER OF SULLINS ELECTRONICS.

SULLINS CONNECTOR SOLUTIONS

TITLE
PCI EXPRESS, 1mm CC, DIP SOLDER(GEN 1)

PART NUMBER
G_E_ _DHHN-T9_1

SIZE	CAGE CODE	DWG. NO.	REV
C	54453	11045	K

SCALE: 3.5:1 | SHEET 1 OF 2

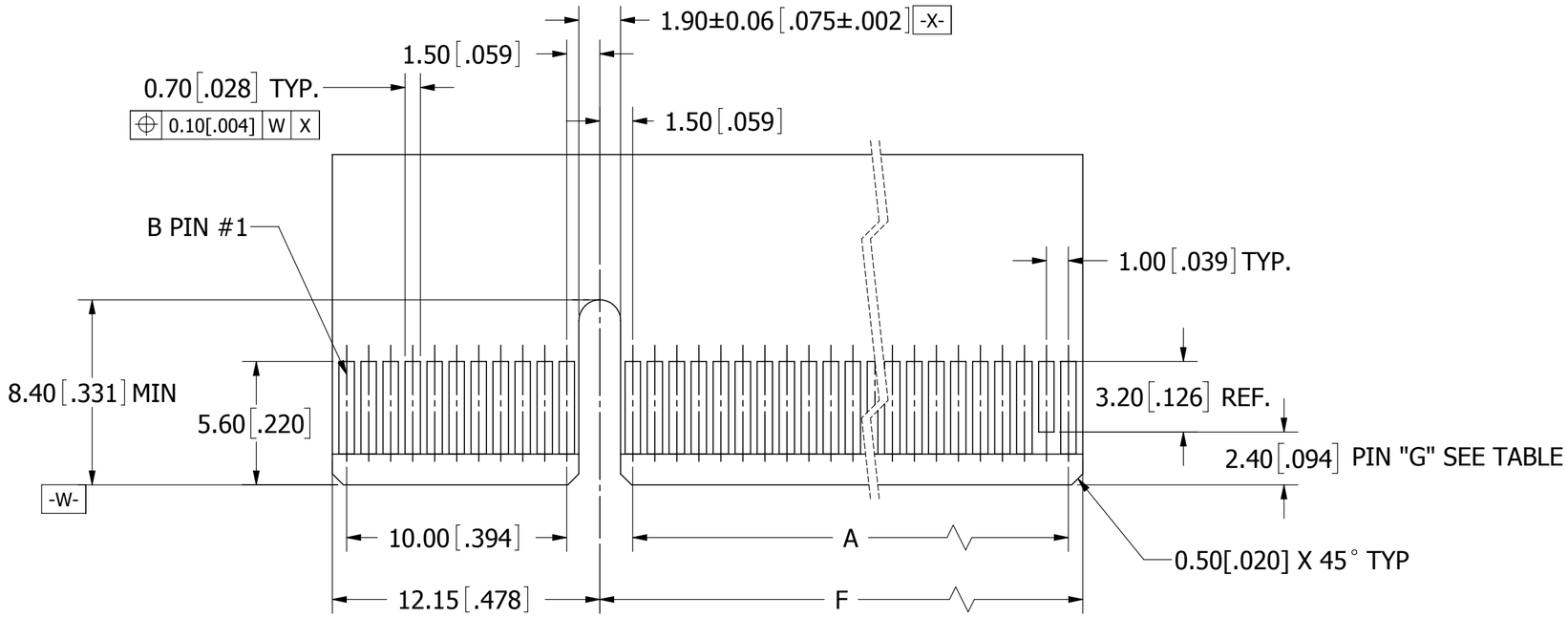

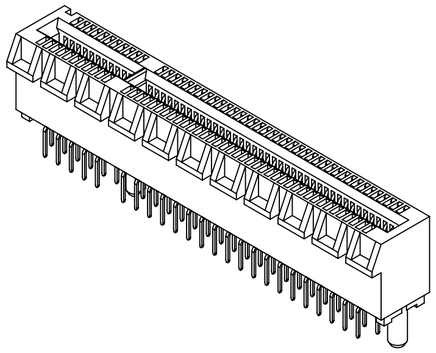

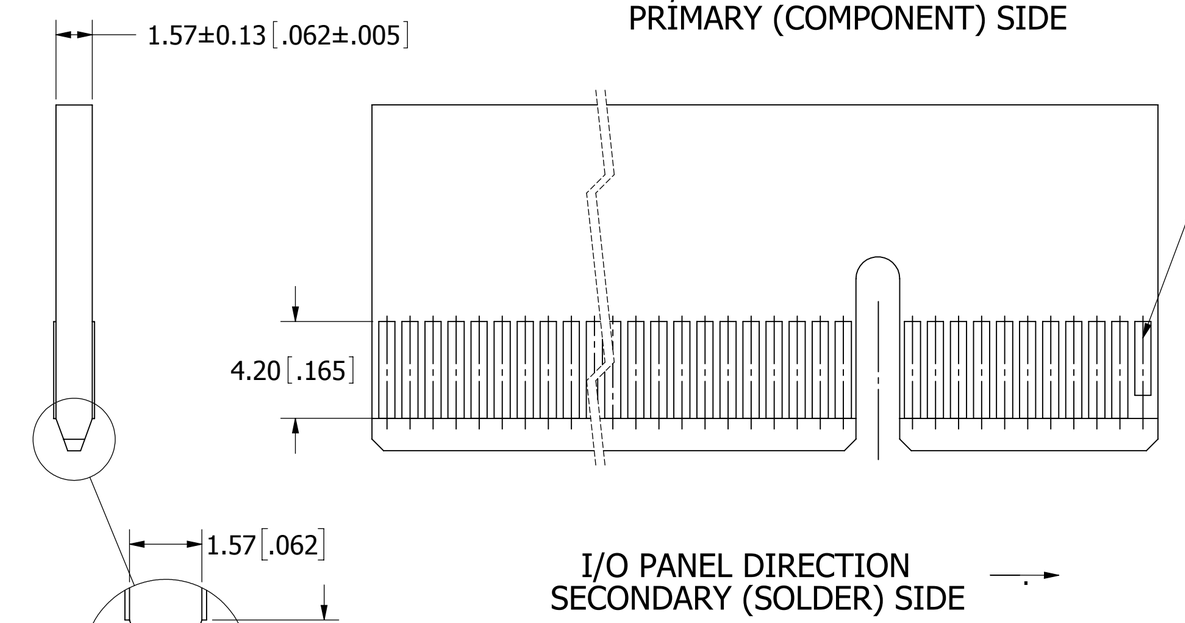

DETAIL A
SCALE 10 : 1

ADD-IN CARD EDGE-FINGER DIMENSIONS

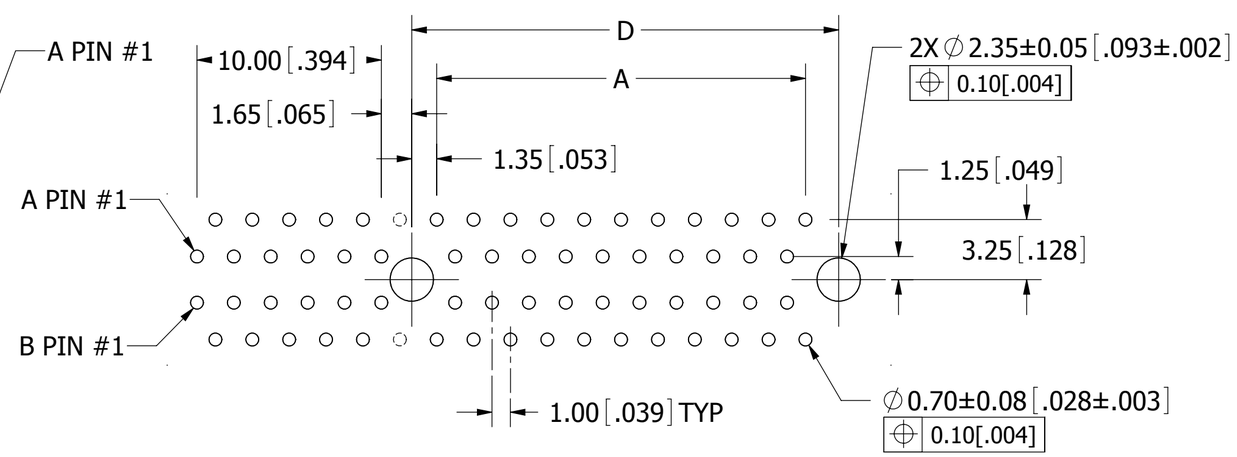

RECOMMENDED PCB LAYOUT
(TOLERANCE: ±0.05[.002])

PART NUMBER	POSITIONS/ CONTACTS	A		D ± 0.10 [.004]		F ± 0.13 [.005]		PIN "G"
		MM	[INCH]	MM	[INCH]	MM	[INCH]	
G_E18DHHN-T9_1	18/36	6.00	0.236	9.15	0.360	8.15	0.321	B17
G_E32DHHN-T9_1	32/64	20.00	0.787	23.15	0.911	22.15	0.872	B31
G_E49DHHN-T9_1	49/98	37.00	1.457	40.15	1.581	39.15	1.541	B48
G_E82DHHN-T9_1	82/164	70.00	2.756	73.15	2.880	72.15	2.841	B81

RoHS COMPLIANT

UNLESS OTHERWISE SPECIFIED:
DIMENSIONS ARE IN MM[INCHES]

TOLERANCES:

ANGULAR: ± 3°

DECIMALS
.X= ± 0.35 [.014]
.XX= ± 0.25 [.010]
.XXX= ± 0.08 [.0031]

DRAWN	DATE	NAME
	03/09/2009	JH

THE INFORMATION HEREIN CONTAINS PROPIETARY INFORMATION OF SULLINS ELECTRONICS AND IS NOT TO BE REPRODUCED, USED OR DISCLOSED TO OTHERS FOR ANY PURPOSE EXCEPT AS SPECIFICALLY AUTHORIZED IN WRITING BY AN OFFICER OF SULLINS ELECTRONICS.

SULLINS CONNECTOR SOLUTIONS

TITLE
PCI EXPRESS, 1mm CC, DIP SOLDER(GEN 1)

PART NUMBER
G_E_ _DHHN-T9_1

SIZE	CAGE CODE	DWG. NO.	REV
C	54453	11045	K

SCALE: 2:1 | SHEET 2 OF 2