THIS DRAWING IS UNPUBLISHED. RELEASED FOR PUBLICATION -,- .
© COPYRIGHT – BY TYCO ELECTRONICS CORPORATION. ALL RIGHTS RESERVED.

LOC	DIST
ES	00

REVISIONS

P	LTR	DESCRIPTION	DATE	DWN	APVD
	A	RELEASED ECR-05-004095	23MAY05	G.Z.	Y.S.

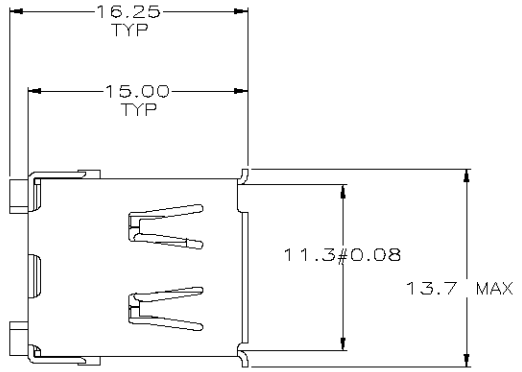

1. 0.076| m MIN GOLD OVER 0.76| m MIN PALLADIUM-NICKEL OR (0.76| m MIN GOLD) FOR A LENGTH OF 2 MIN ON MATING FACE END, 3.81| m MIN TIN FOR A LENGTH OF 2.2 MIN ON OPPOSITE END, ALL OVER 1.27| m MIN NICKEL.
2. 5.08| m MIN TIN.
3. LCP, BLACK, UL 94V-0 RATED.
4. DIMENSION TO BE ESTABLISHED BY CUSTOMER, X.XX BSC TO BE 8.45 MIN.

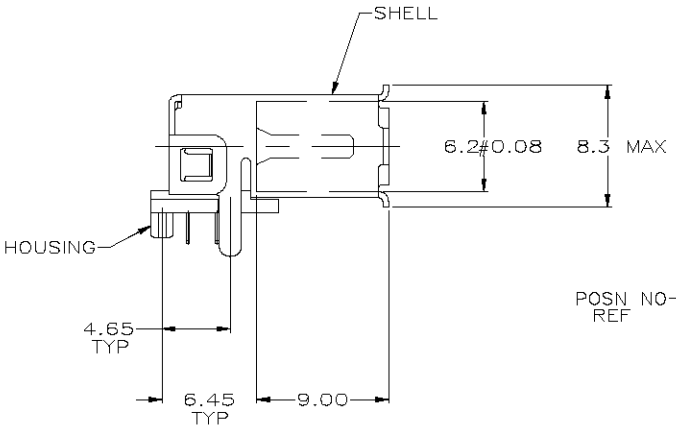

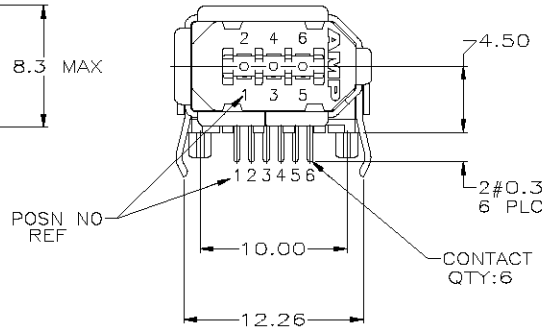

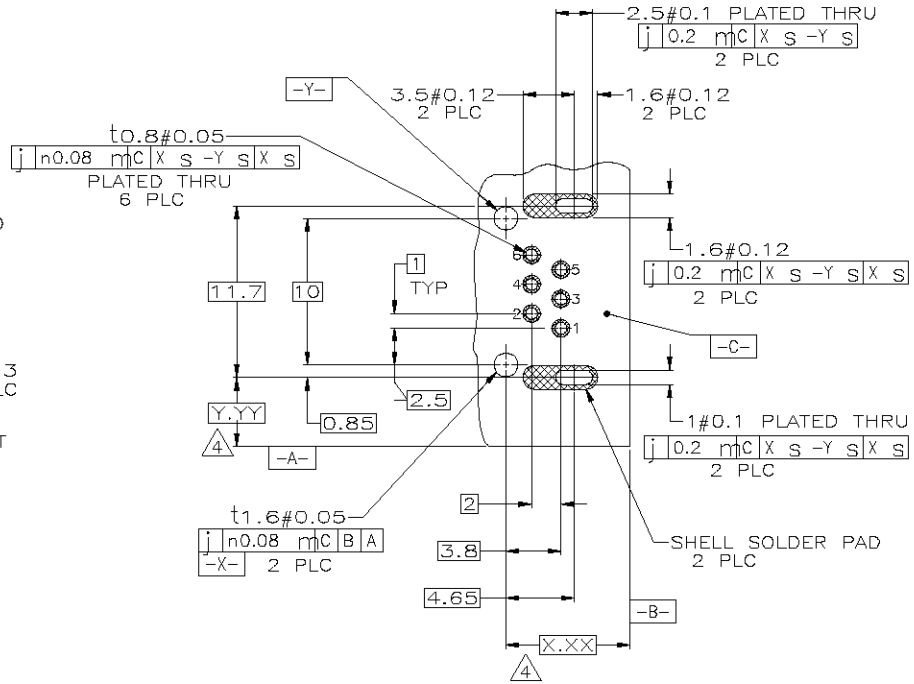

RECOMMENDED PWB LAYOUT
CONNECTOR SIDE

5788516-1
PART NO

THIS DRAWING IS A CONTROLLED DOCUMENT.

DIMENSIONS: mm

TOLERANCES UNLESS OTHERWISE SPECIFIED:
0 PLC ± –
1 PLC ± –
2 PLC ± 0.13
3 PLC ± –
4 PLC ± –
ANGLES ± –

MATERIAL
CONTACTS: BRASS
SHELL: PHOS BRONZE
HOUSING: 3

FINISH
CONTACTS: 1
SHELL: 2

DWN	GAVIN ZHANG	23MAY05
CHK	STEVEN YAO	23MAY05
APVD	STEVEN YAO	23MAY05
PRODUCT SPEC	—	
APPLICATION SPEC	—	
WEIGHT	—	

tyco Electronics
Tyco Electronics Corporation
Shanghai, P.R.China, 200233

NAME
SOCKET ASSEMBLY,
RIGHT ANGLE FLAT, THRU HOLE,
IEEE P1394

SIZE	CAGE CODE	DRAWING NO	RESTRICTED TO
A2	00779	C-5788516	—

CUSTOMER DRAWING | SCALE 4:1 | SHEET 1 OF 1 | REV A

AMP 1471-9 REV 31MAR2000

F:\All Guys\Gavin Zhang\1394_FB00\5788516\C-5788516.dwg

5788516