REV.	ECN NO.	REVISIONS	DRN.	CKD.	APP.	DATE
D	——	126/.123 WAS .126(MAX); RE-DIMENSIONED "FLANGE TO PIPE EDGES RELATIONSHIP" FROM TOP CORNERS; ADDED MOLDING DRAFT (BOTH SIDES)"; .350 WAS .252; .515 WAS .514; DELETED R .450 SPHERICAL RADII.	MC		M.C.	12-17-93
E	——	ADDED HOLE DIMS IN PAD LAY-OUT, NOTE 3, AND .06 (NOTE 3) AND Ø.116 ±.001 WAS Ø.115 ±.001	MC		L.R.	8-27-96
F	——	ADDED CHANNELS FOR SHIELD INSERT.	TC	DC	A.V.	2-15-99

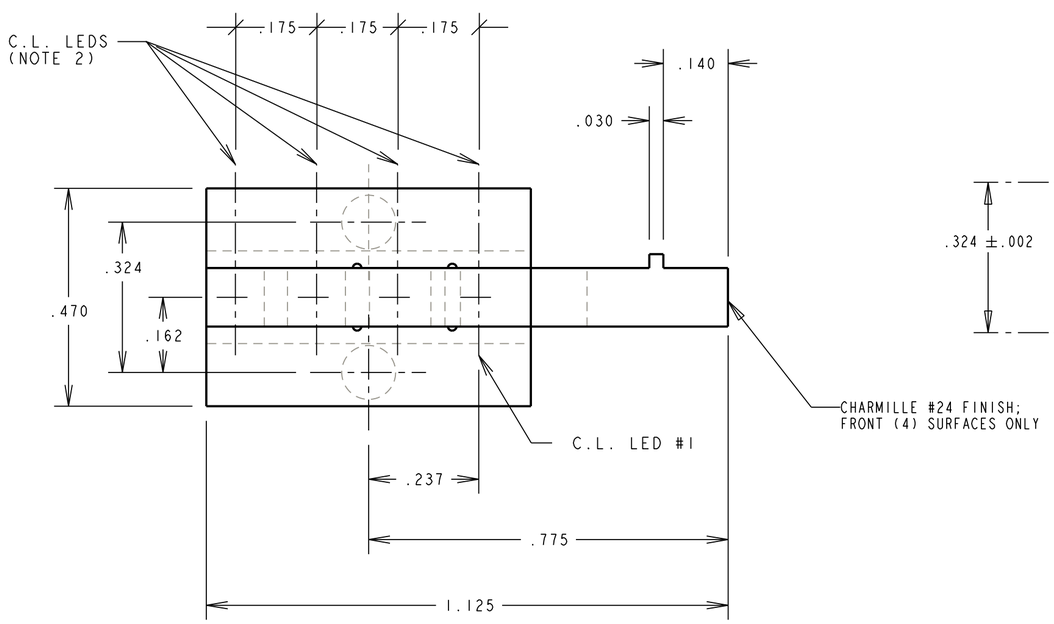

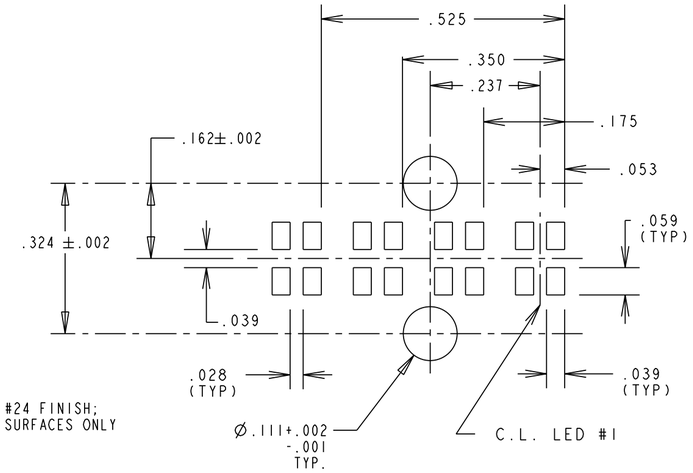

RECOMMENDED SOLDER PAD LAYOUT

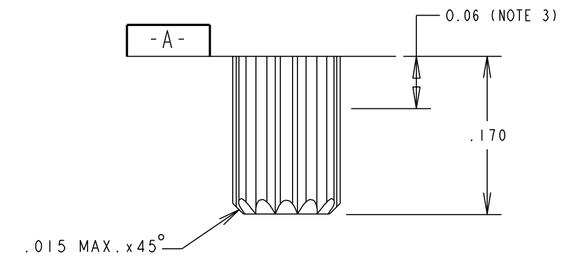

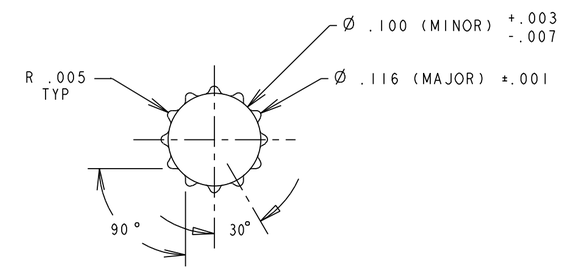

DETAIL "A"

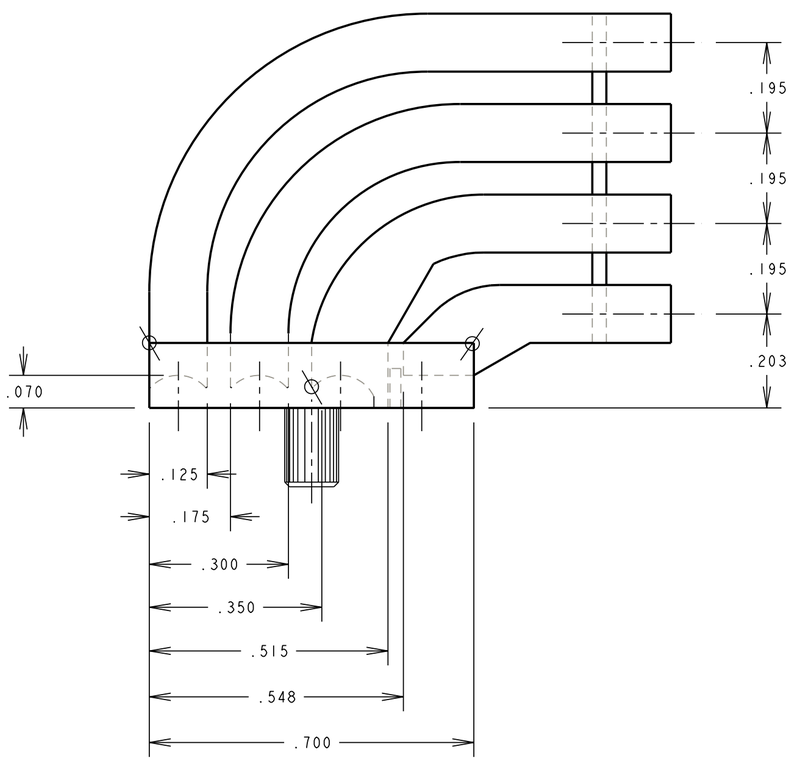

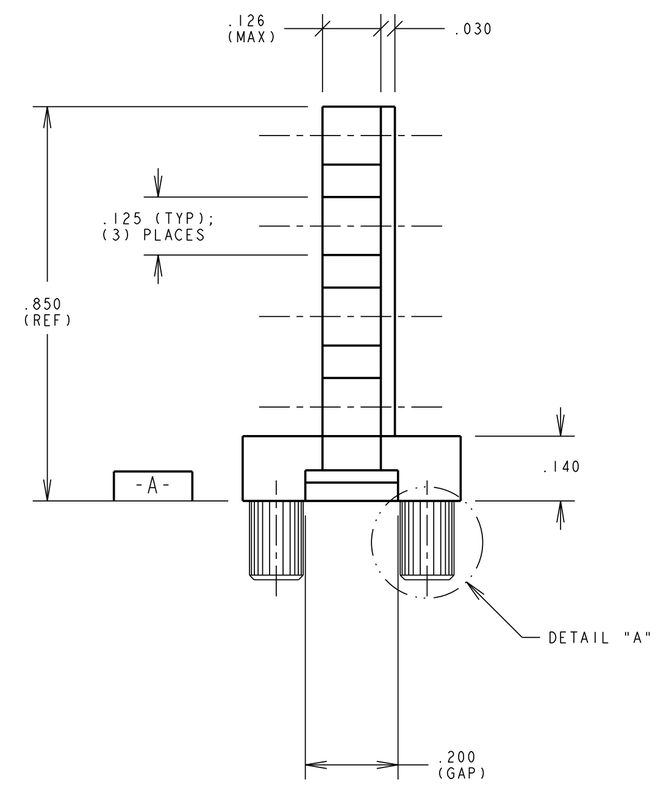

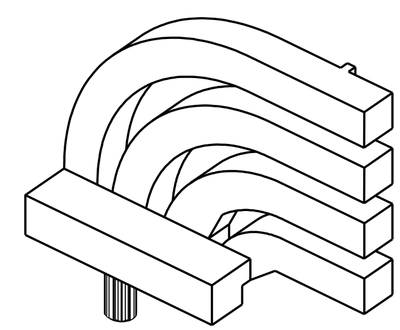

NOTES:

1. COMPONENT TO BE MOLDED IN A WATER CLEAR TRANSMISSIVE POLYCARBONATE.
2. RECOMMENDED PLACEMENT OF LED.
3. Ø .116 ±.001 TO BE MAINTAINED FROM SURFACE -A- TO .06.
4. DIALIGHT PART NO. 515-1023

THIS DRAWING AND THE CONTENTS HEREIN ARE CONFIDENTIAL AND THE SOLE PROPERTY OF DIALIGHT. REPRODUCTION OF THIS DRAWING OR CONSTRUCTION OF ANY PARTS WITHIN THIS DRAWING ARE FORBIDDEN WITHOUT THE WRITTEN CONSENT OF DIALIGHT.

SCALE: 4:1

ALL DIM'S IN: INCHES (MM)

TOLERANCES:
UNLESS OTHERWISE SPECIFIED
FRACTIONS: ±1/64
DECIMALS (.XX): ±.01
DECIMALS (.XXX): ±.005
ANGLES: ±1°

FINISH:

FSCM 83330

DRAWING NUMBER: C-15820

REV: F

TITLE: QUADLEVEL LIGHTPIPE

MATERIAL:

Dialight
1501 ROUTE 34 SOUTH
FARMINGDALE, NJ 07727

SHEET OF

FAMILY TABLES: