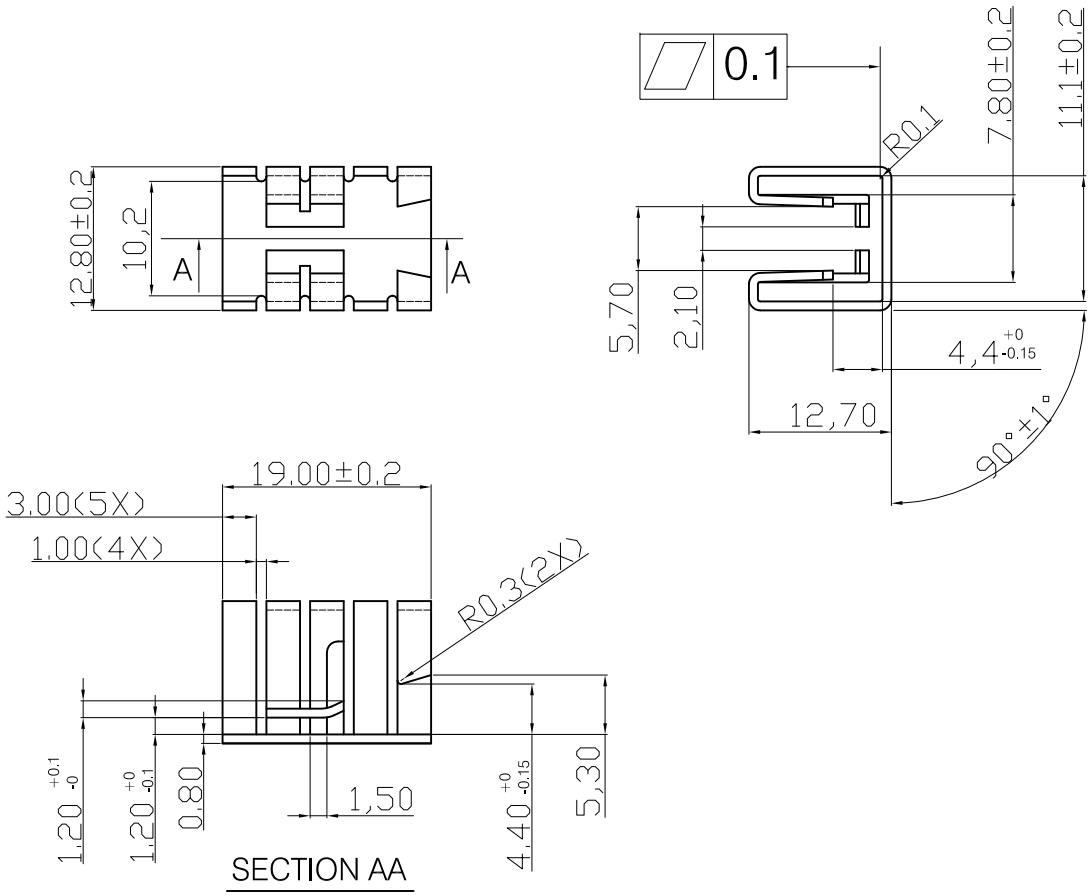

Notes
Material : AL 5052 T=0.8±0.1 MM
Finished : Black Anodize

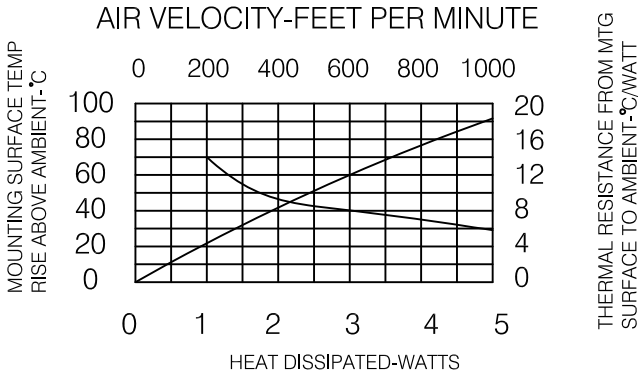

RoHS compliant

Scale	FREE					Date	Name	Customer-No.
TOLERANCE					Drawn	22.07.2004	Hellwig	
UNIT	±0.5				Approved	11.08.2009	Andy	ASSMANN WSW-No. V8508A
DIM	TOL	②	Update	11.08.2009	Dean			Drawing-No. ASS 0387 HS rev02
X.°	±X°	①	Drawn	22.07.2004	Hellwig			
X.X°	±X°							
Angle	TOL	Id.	Modification	Date	Name			Replace / Sheet

ASSMANN WSW components