EV32C6B5A1-3.686M

Click part number to visit Part Number Details page

Ecliptek

REGULATORY COMPLIANCE (Data Sheet downloaded on Nov 30, 2017)

Lead Free COMPLIANT | EU RoHS 2011/65 + 2015/863 COMPLIANT | China RoHS COMPLIANT | REACH 174 SVHC COMPLIANT

Click badges to download compliance docs

Regulatory Compliance standards are subject to updates by governing bodies. Click the badges to download the latest compliance docs for this part number directly from Ecliptek.

DRC CONFLICT FREE

ITEM DESCRIPTION

Voltage Controlled Quartz Crystal Clock Oscillators VCXO LVCMOS/TTL (CMOS) 3.3Vdc 6 Pad 5.0mm x 7.0mm Ceramic Surface Mount (SMD) 3.686MHz ±50ppm Maximum -40°C to +85°C ±100ppm Minimum 10% Typical, 20% Maximum

ELECTRICAL SPECIFICATIONS

Nominal Frequency	3.686MHz
Frequency Tolerance/Stability	±50ppm Maximum (Inclusive of all conditions: Calibration Tolerance at 25°C, Frequency Stability over the Operating Temperature Range, Supply Voltage Change, Output Load Change, Shock, and Vibration.)
Aging at 25°C	±2ppm/First Year Typical, ±10ppm/10 Years Maximum
Operating Temperature Range	-40°C to +85°C
Supply Voltage	3.3Vdc ±10%
Input Current	15mA Maximum
Output Voltage Logic High (Voh)	90% of Vdd Minimum (IOH = -4mA)
Output Voltage Logic Low (Vol)	10% of Vdd Maximum (IOL = +4mA)
Rise/Fall Time	5nSec Maximum (Measured at 20% to 80% of Waveform)
Duty Cycle	50 ±10(%) (Measured at 50% of Waveform)
Load Drive Capability	10TTL Load or 30pF LVCMOS Load Maximum
Output Logic Type	CMOS
Absolute Pull Range	±100ppm Minimum (Inclusive of all conditions: Calibration Tolerance at 25°C, Frequency Stability over the Operating Temperature Range, Supply Voltage Change, Output Load Change, Shock, Vibration, and Aging over the Control Voltage (Vc).)
Control Voltage	0.3Vdc to 3.0Vdc (Test Condition for APR)
Control Voltage Range	0.0Vdc to Vdd
Linearity	10% Typical, 20% Maximum
Transfer Function	Positive Tranfer Characteristic
Modulation Bandwidth	10kHz Minimum (Measured at -3dB, Vc = 1.65Vdc)
Input Impedance	50kOhms Minimum
Input Leakage Current	10µA Maximum
Phase Noise	All Values are Typical -70dBc/Hz at offset of 10Hz -100dBc/Hz at offset of 100Hz -130dBc/Hz at offset of 1kHz -147dBc/Hz at offset of 10kHz -152dBc/Hz at offset of 100kHz -155dBc/Hz at offset of 1MHz
Tri-State Input Voltage (Vih and Vil)	90% of Vdd Minimum or No Connect to Enable Output, 10% of Vdd Maximum to Disable Output (High Impedance)
RMS Phase Jitter	1pSec Maximum (Fj = 12kHz to 20MHz; Random)
Start Up Time	10mSec Maximum
Storage Temperature Range	-55°C to +125°C

ENVIRONMENTAL & MECHANICAL SPECIFICATIONS

ESD Susceptibility	MIL-STD-883, Method 3015, Class 1, HBM: 1500V
Fine Leak Test	MIL-STD-883, Method 1014, Condition A
Flammability	UL94-V0
Gross Leak Test	MIL-STD-883, Method 1014, Condition C
Mechanical Shock	MIL-STD-883, Method 2002, Condition B

Ecliptek, LLC 5458 Louie Lane, Reno, NV 89511 1-800-ECLIPTEK or 714.433.1200

EV32C6B5A1-3.686M

Click part number to visit Part Number Details page

Ecliptek

ENVIRONMENTAL & MECHANICAL SPECIFICATIONS CONTINUED

Moisture Resistance	MIL-STD-883, Method 1004
Moisture Sensitivity	J-STD-020, MSL 1
Resistance to Soldering Heat	MIL-STD-202, Method 210, Condition K
Resistance to Solvents	MIL-STD-202, Method 215
Solderability	MIL-STD-883, Method 2003
Temperature Cycling	MIL-STD-883, Method 1010, Condition B
Vibration	MIL-STD-883, Method 2007, Condition A

Ecliptek, LLC 5458 Louie Lane, Reno, NV 89511 1-800-ECLIPTEK or 714.433.1200

EV32C6B5A1-3.686M

Click part number to visit Part Number Details page

MECHANICAL DIMENSIONS (all dimensions in millimeters)

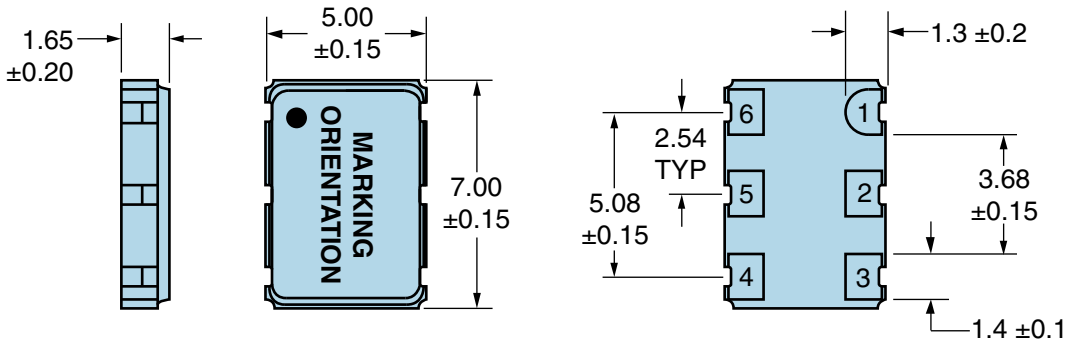

PIN	CONNECTION
1	Control Voltage
2	Tri-State
3	Case Ground
4	Output
5	No Connect
6	Supply Voltage

LINE	MARKING
1	**ECLIPTEK**
2	**3.6860M**
3	**XXXXX** *XXXXX=Ecliptek Manufacturing Identifier*

Suggested Solder Pad Layout

All Dimensions in Millimeters

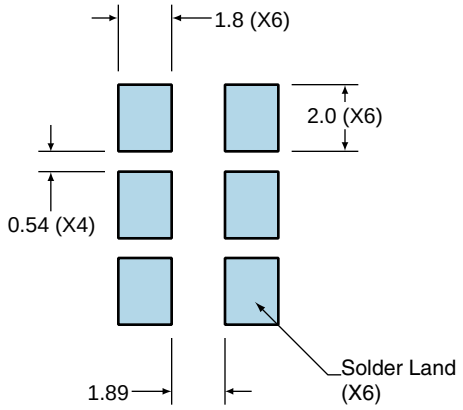

All Tolerances are ±0.1

Ecliptek, LLC 5458 Louie Lane, Reno, NV 89511 1-800-ECLIPTEK or 714.433.1200

EV32C6B5A1-3.686M

Click part number to visit Part Number Details page

OUTPUT WAVEFORM & TIMING DIAGRAM

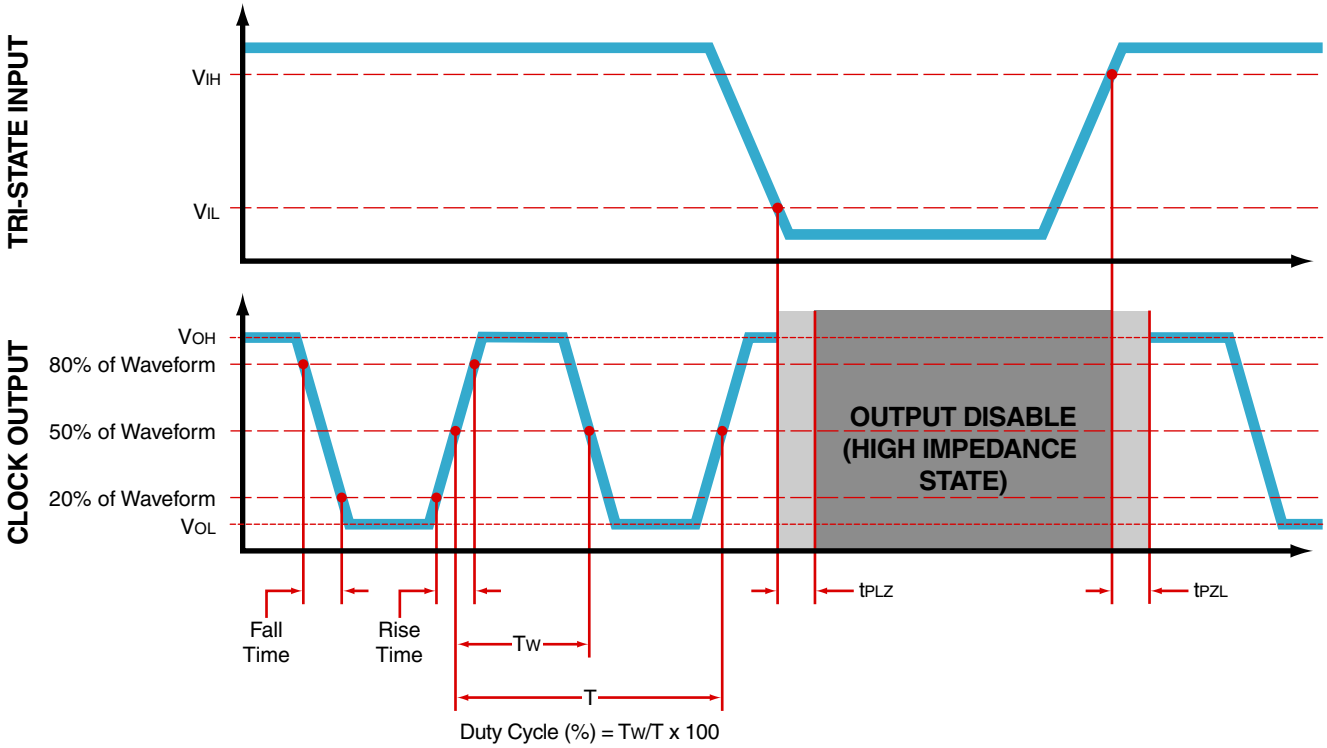

Ecliptek, LLC 5458 Louie Lane, Reno, NV 89511 1-800-ECLIPTEK or 714.433.1200

EV32C6B5A1-3.686M

Click part number to visit Part Number Details page

Test Circuit for CMOS Output

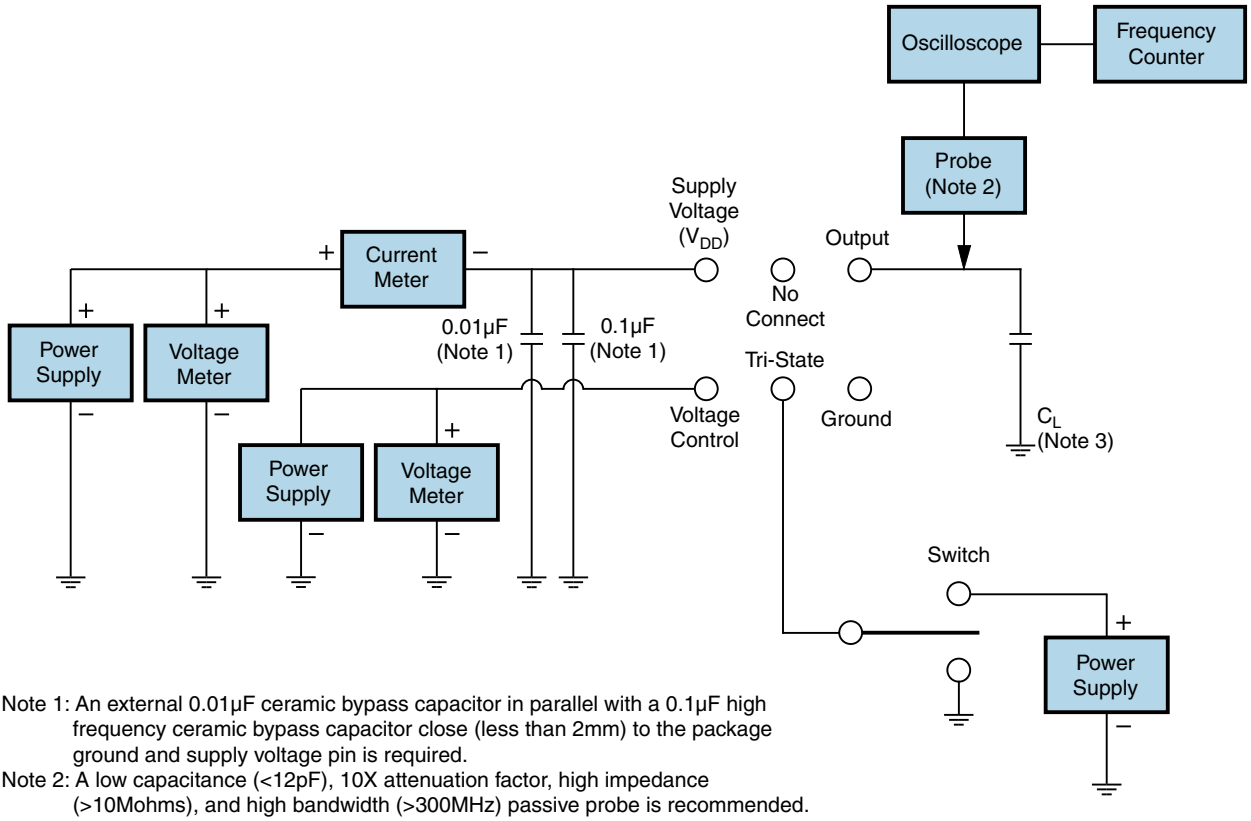

Note 1: An external 0.01µF ceramic bypass capacitor in parallel with a 0.1µF high frequency ceramic bypass capacitor close (less than 2mm) to the package ground and supply voltage pin is required.

Note 2: A low capacitance (<12pF), 10X attenuation factor, high impedance (>10Mohms), and high bandwidth (>300MHz) passive probe is recommended.

Note 3: Capacitance value C_L includes sum of all probe and fixture capacitance.

Ecliptek, LLC 5458 Louie Lane, Reno, NV 89511 1-800-ECLIPTEK or 714.433.1200

EV32C6B5A1-3.686M

Click part number to visit Part Number Details page

Test Circuit for TTL Output

Output Load Drive Capability	R_L Value (Ohms)	C_L Value (pF)
10TTL	390	15

Table 1: R_L Resistance Value and C_L Capacitance Value Vs. Output Load Drive Capability

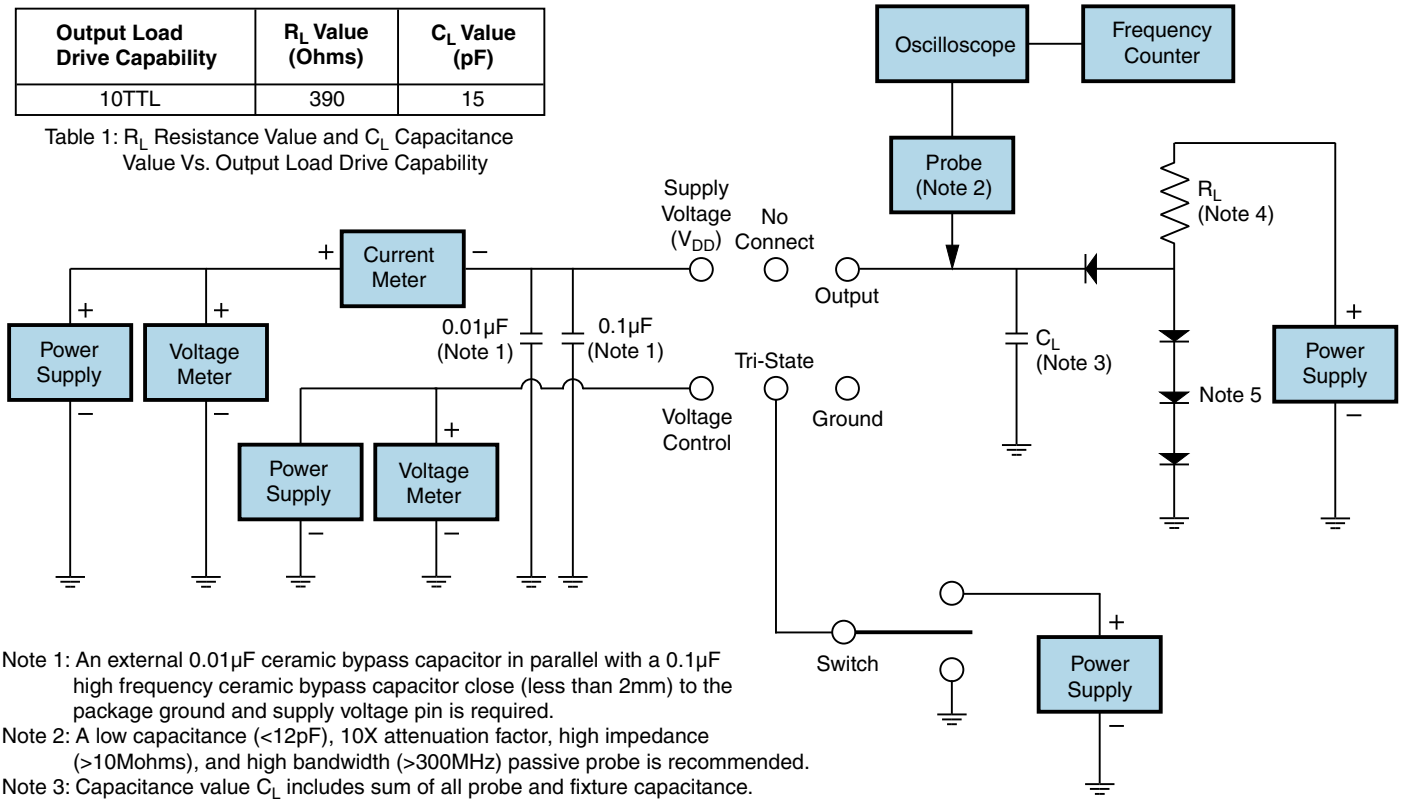

Note 1: An external 0.01µF ceramic bypass capacitor in parallel with a 0.1µF high frequency ceramic bypass capacitor close (less than 2mm) to the package ground and supply voltage pin is required.
Note 2: A low capacitance (<12pF), 10X attenuation factor, high impedance (>10Mohms), and high bandwidth (>300MHz) passive probe is recommended.
Note 3: Capacitance value C_L includes sum of all probe and fixture capacitance.
Note 4: Resistance value R_L is shown in Table 1. See applicable specification sheet for 'Load Drive Capability'.
Note 5: All diodes are MMBD7000, MMBD914, or equivalent.

Ecliptek, LLC 5458 Louie Lane, Reno, NV 89511 1-800-ECLIPTEK or 714.433.1200

EV32C6B5A1-3.686M

Click part number to visit Part Number Details page

Recommended Solder Reflow Methods

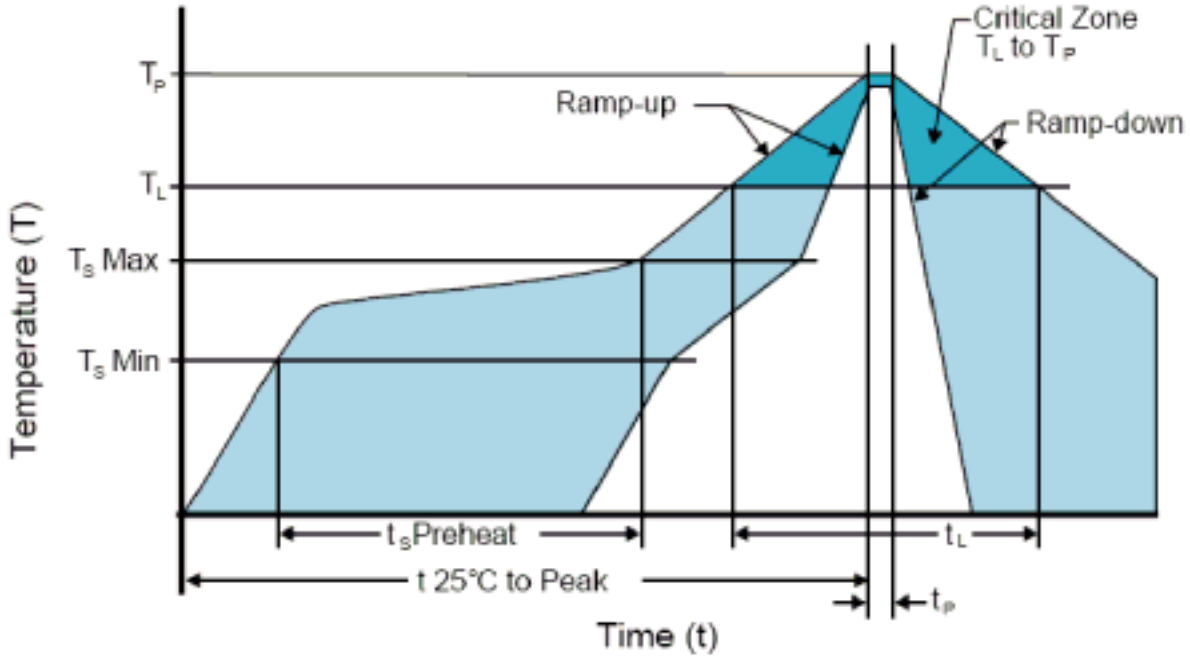

High Temperature Infrared/Convection

T_S MAX to T_L (Ramp-up Rate)	3°C/Second Maximum
Preheat	
- Temperature Minimum (T_S MIN)	150°C
- Temperature Typical (T_S TYP)	175°C
- Temperature Maximum (T_S MAX)	200°C
- Time (t_S MIN)	60 - 180 Seconds
Ramp-up Rate (T_L to T_P)	3°C/Second Maximum
Time Maintained Above:	
- Temperature (T_L)	217°C
- Time (t_L)	60 - 150 Seconds
Peak Temperature (T_P)	260°C Maximum for 10 Seconds Maximum
Target Peak Temperature (T_P Target)	250°C +0/-5°C
Time within 5°C of actual peak (t_p)	20 - 40 Seconds
Ramp-down Rate	6°C/Second Maximum
Time 25°C to Peak Temperature (t)	8 Minutes Maximum
Moisture Sensitivity Level	Level 1

Ecliptek, LLC 5458 Louie Lane, Reno, NV 89511 1-800-ECLIPTEK or 714.433.1200

EV32C6B5A1-3.686M

Click part number to visit Part Number Details page

Ecliptek

Recommended Solder Reflow Methods

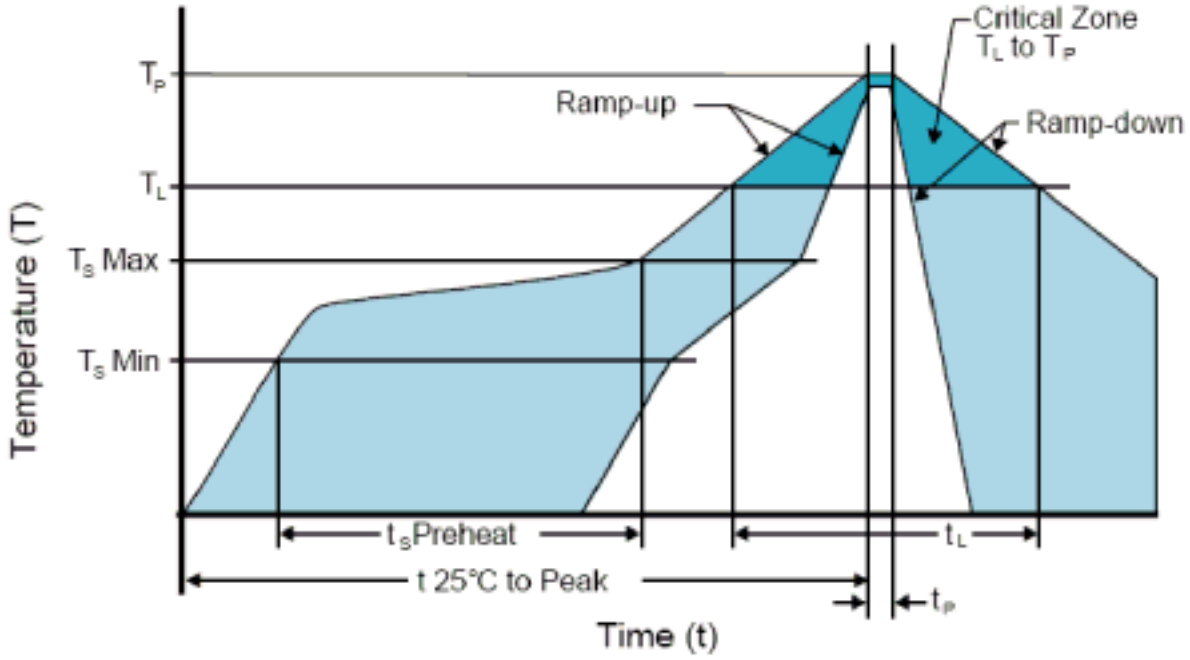

Low Temperature Infrared/Convection 240°C

T_S MAX to T_L (Ramp-up Rate)	5°C/Second Maximum
Preheat	
- Temperature Minimum (T_S MIN)	N/A
- Temperature Typical (T_S TYP)	150°C
- Temperature Maximum (T_S MAX)	N/A
- Time (t_S MIN)	60 - 120 Seconds
Ramp-up Rate (T_L to T_P)	5°C/Second Maximum
Time Maintained Above:	
- Temperature (T_L)	150°C
- Time (t_L)	200 Seconds Maximum
Peak Temperature (T_P)	240°C Maximum
Target Peak Temperature (T_P Target)	240°C Maximum 2 Times / 230°C Maximum 1 Time
Time within 5°C of actual peak (t_p)	10 Seconds Maximum 2 Times / 80 Seconds Maximum 1 Time
Ramp-down Rate	5°C/Second Maximum
Time 25°C to Peak Temperature (t)	N/A
Moisture Sensitivity Level	Level 1

Low Temperature Manual Soldering

185°C Maximum for 10 Seconds Maximum, 2 times Maximum.

High Temperature Manual Soldering

260°C Maximum for 5 Seconds Maximum, 2 times Maximum.

Ecliptek, LLC 5458 Louie Lane, Reno, NV 89511 1-800-ECLIPTEK or 714.433.1200