STANDOFF				
PART NO.	THREAD	"A" ±.015	"B"	"C"
4375	4–40	.250	3/16"	3/16"
4376	6–32	.250	1/4"	.21
4377	8–32	.250	3/8"	.21
4378	4–40	.375	3/16"	3/16"
4379	6–32	.375	1/4"	1/4"
4380	8–32	.375	3/8"	.21
4381	4–40	.500	3/16"	3/16"
4382	6–32	.500	1/4"	1/4"
4383	8–32	.500	3/8"	3/8"
4384	4–40	.625	3/16"	3/16"
4385	6–32	.625	1/4"	1/4"
4386	8–32	.625	3/8"	3/8"
4387	4–40	.750	3/16"	3/16"
4388	6–32	.750	1/4"	1/4"
4389	8–32	.750	3/8"	3/8"
4390	4–40	.875	3/16"	3/16"
4391	6–32	.875	1/4"	1/4"
4392	8–32	.875	3/8"	3/8"
4393	4–40	1.000	3/16"	3/16"
4394	6–32	1.000	1/4"	1/4"
4395	8–32	1.000	3/8"	3/8"
4396	4–40	1.125	3/16"	3/16"
4397	6–32	1.125	1/4"	1/4"
4398	8–32	1.125	3/8"	3/8"
4399	4–40	1.250	3/16"	3/16"
4400	6–32	1.250	1/4"	1/4"
4401	8–32	1.250	3/8"	3/8"
4402	4–40	1.375	3/16"	3/16"
4403	6–32	1.375	1/4"	1/4"
4404	8–32	1.375	3/8"	3/8"
4405	4–40	1.500	3/16"	3/16"
4406	6–32	1.500	1/4"	1/4"
4407	8–32	1.500	3/8"	3/8"
4408	4–40	1.625	3/16"	3/16"
4409	6–32	1.625	1/4"	1/4"
4410	8–32	1.625	3/8"	3/8"
4411	4–40	1.750	3/16"	3/16"
4412	6–32	1.750	1/4"	1/4"
4413	8–32	1.750	3/8"	3/8"
4414	4–40	2.000	3/16"	3/16"
4415	6–32	2.000	1/4"	1/4"
4416	8–32	2.000	3/8"	3/8"

REVISIONS				
SYM	DESCRIPTION	REVISED BY	DATE	APPR

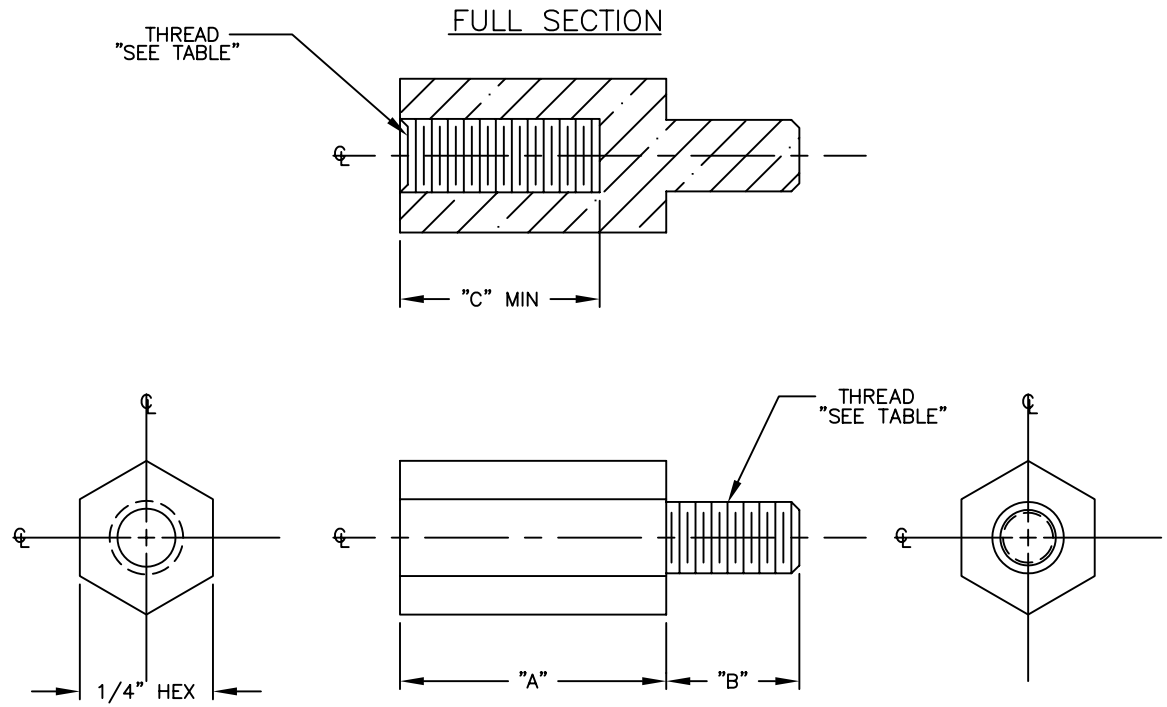

MATERIAL NYLON 6/6 UL94V2	FINISH NATURAL		
DIMENSIONAL TOLERANCES UNLESS OTHERWISE SPECIFIED	TITLE 4375 THRU 4416 1/4 HEX NYLON MALE/FEMALE STANDOFF		
.XX: --- .XXX: --- .XXXX: ---			
FRACTIONS: --- ANGLES: --- SCALE: 4:1	DRAWN: J. TEASDALE	DATE 4-6-94	
HEAT TREAT — — —	CHECKED: ED. McKINNEY	DATE 4-6-94	
PLOT SCALE: 1=1	APPROVED: (SEE ABOVE)	DATE 4-11-95	

ABBATRON

Electronic Connectors and Hardware

632 Arch Street, Meadville, Pa. 16335

SIZE	DRAWING NUMBER	ISSUE
B	SD: SMP-00271	C