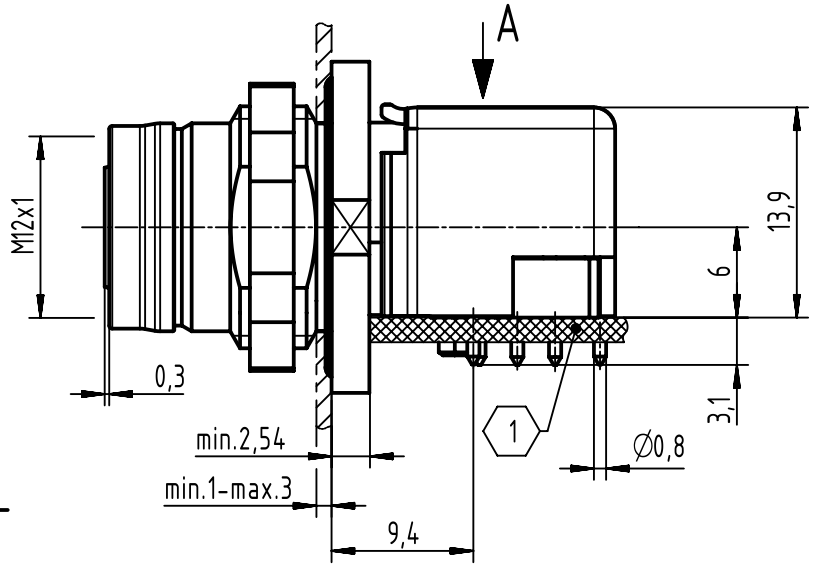

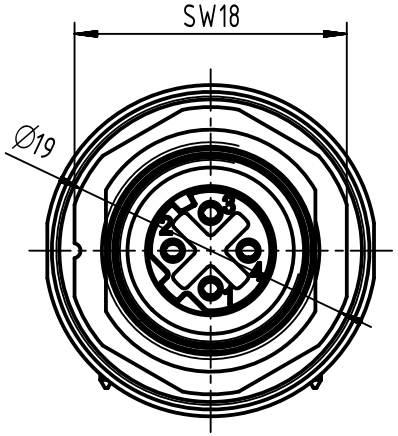

cable direction of angled connectors

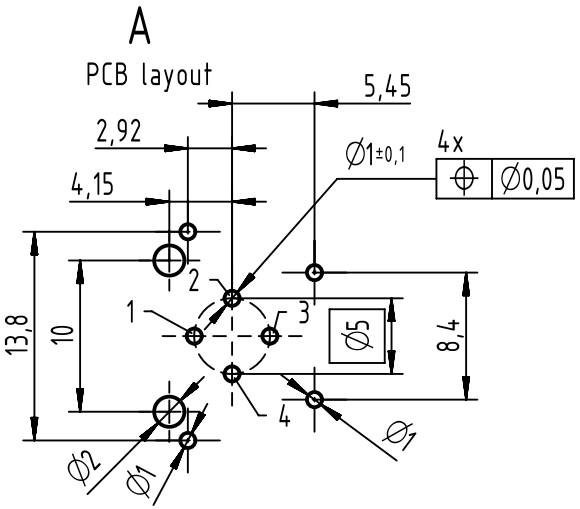

panel cut out

(1:1)

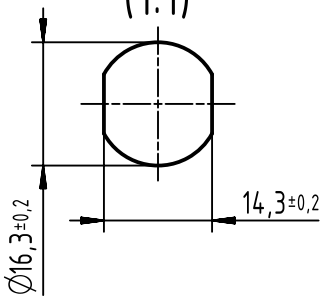

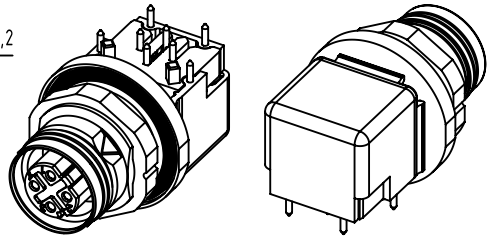

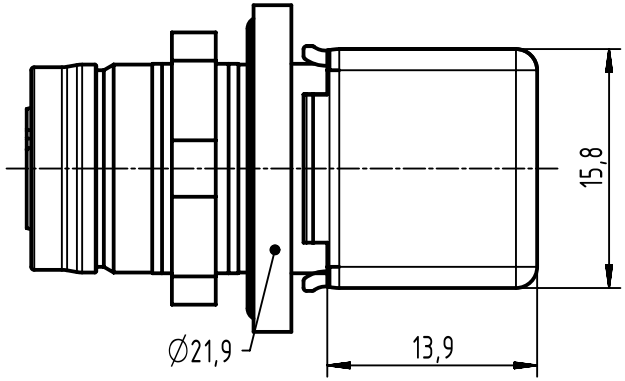

1 recommended PCB-thickness: 1.6mm

All Dimensions in mm Original Size DIN A4	Scale 2:1	Free size tol.		Ref. Sub.	
All rights reserved Department EC PD - DE	Created by DYCKC	Inspected by EISFELD	Standardisation HOFFMANN	Date 2017-10-02	State Final Release
HARTING Electronics GmbH D-32339 Espelkamp	Title HARTING M12 PCB female D-coded angled IP67				Doc-Key / ECM-Nr. 100665631/UGD/002/C 500000124260
	Type TB	Number 21033814436		Rev. C	Page 1/1

A4