SIGN	DATE	DESCRIPTION	APPROVER

THIS IS CAD DRAWING, DO NOT REVISE MANUALLY!!!

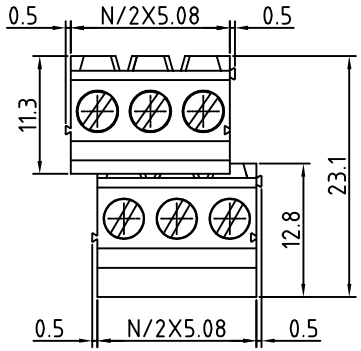

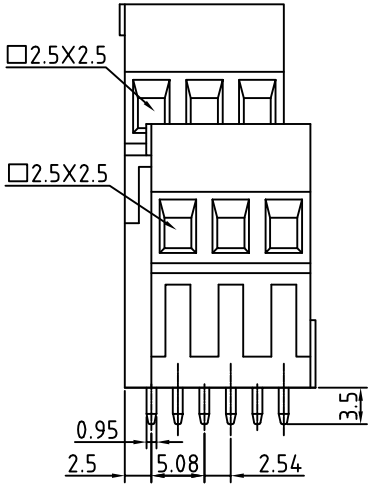

N=Number of poles

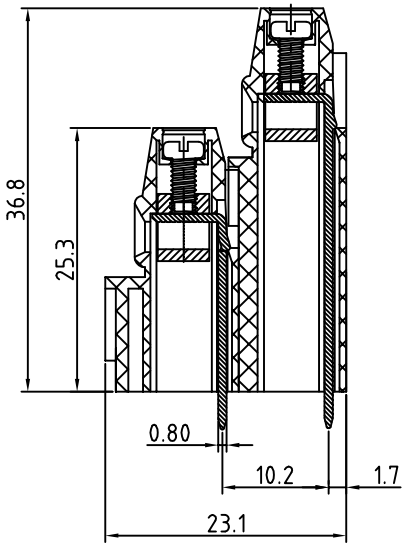

P.C.B LAYOUT

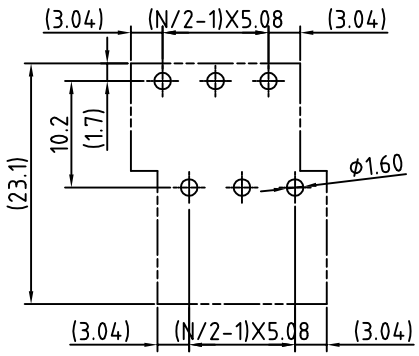

Material

- Terminal body
- (metal housing): Brass(CuZn)
- Terminal screw: Steel Zinc plating "-" slot type
- Contacts: Brass
- Surface of solder tail: Tin plated
- Insulator (housing): Thermoplastic (UL94V-0)

Electrical

- Voltage rating: 300VAC
- Current rating: 10A
- Wire range:
  Solid wire(AWG): 12-24
  Stranded wire(AWG): 12-24
- Torque(Lb-In): 3.5
- Screw: M2.5
- Wire strip length: 6-7mm
- Withstanding Voltage: 1.6KV
- Operating temperature: -30°C to +105°C
- Soldering temperature: 250°C±10°C/5 Sec
- Safety Approval: c UL us

RoHS Compliant

PART NUMBER:

OSTYMXX6150

No. of Poles
- 04: 2×02 Poles
- 06: 2×03 Poles
- : :
- 48 2×24 Poles

COLOR
- 0: Black
- 5: Green (Standard)
- 6: Blue
- 8: Grey

THESE DRAWINGS AND SPECIFICATIONS ARE THE PROPERTY OF ON-SHORE TECHNOLOGY, INC. AND SHALL NOT BE REPRODUCED, COPIED OR USED IN ANY MANNER WITHOUT THE PRIOR WRITTEN CONSENT OF ON-SHORE TECHNOLOGY, INC.

ON-SHORE TECHNOLOGY, INC.

TITLE	OSTYM-5.08mm series right				
PART NO.	OSTYMXX6150			DWG NO.	OSTYMXX6150.DWG
APPROVED	CHECKED	DESIGNED	DRAWN	CUST NO.	
Shi Jun 2006.10.20	Shi Jun 2006.10.20	xionghaitao 2006.10.20	xionghaitao 2006.10.20	UNIT: mm / SCALE: NONE / SHEET: 01/01 / REV.: D	

Tolerance	
X.	±0.50
X.X	±0.30
X.XX	±0.10
X°	±1°