NOTES:

SPECIFICATIONS:
Impedance: 50 OHMS
Frequency Range: 0-4 GHz
VSWR: 0 - 7 GHz, 1.08 MAX.
Working Voltage: 500 V rms @ Sea Level
Temperature Range: -65°C TO 85°C
Insulation Resistance: 5k M Ohms min.

ALL DIMENSIONS ARE FOR REFERENCE ONLY

ITEM	DESCRIPTION	QTY	MATERIAL	FINISH
1	BODY	1	BRASS	SILVER 5µ"
2	GASKET	1	RUBBER	N/A
3	LOCK WASHER	1	BRASS	SILVER 5µ"
4	DIELECTRIC	1	SK-5	SILVER 5µ"
5	GROUND RING	1	BRASS	SILVER 5µ"
6	GASKET	1	BRASS	SILVER 5µ"
7	RETAINING RING	1	PTFE	NONE
8	SHELL	1	BRASS	GOLD 3µ"
9	BRASS	1	BRASS	SILVER 5µ"

REVISIONS

ZONE	REV.	DESCRIPTION	DATE	DRAWN BY	ECR NUMBER
ALL	A	INITIAL DRAWING RELEASE	8/22/2012	PFR	N/A

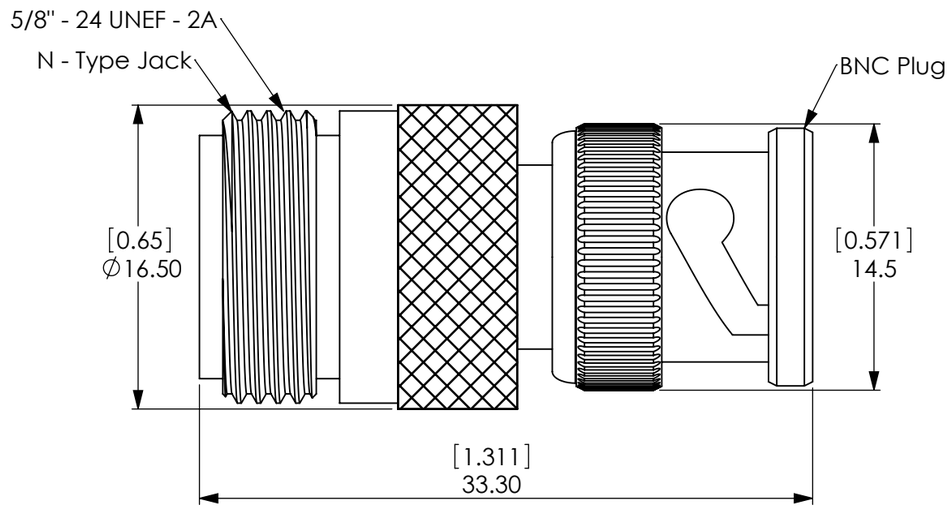

Notes:

THE COMPONENTS(S), INCLUDING ANY PLATING, FINISHES, COATINGS, CHEMICALS AND SURFACES TREATMENTS, SUPPLIED IN THIS DOCUMENT/DRAWING MUST CONFORM AND COMPLY WITH THE LATEST ISSUE OF LAIRD TECHNOLOGIES SPECIFICATION LT-GES-001, WHICH FULLY INCLUDES BUT IS NOT LIMITED TO ALL CONTENTS OF EU DIRECTIVES 2002/96/EC (RoHS DIRECTIVE), AS WELL AS INCLUDES REQUIREMENTS OF THE JOINT INDUSTRY GUIDE STANDARD JIG-101, APRIL 2005. THE COMPONENT(S) IN THIS DOCUMENT/DRAWING MAY BE SUBJECT TO A FULL COMPOUND ANALYSIS FOR PROOF OF COMPLIANCE. THE LATEST ISSUE OF LAIRD TECHNOLOGIES SPECIFICATION LT-GES-001, (GENERAL SPECIFICATION FOR THE ENVIRONMENT) IS READILY AVAILABLE UPON REQUEST FROM THE SUPPLIER.

UNLESS OTHERWISE NOTED, THIS DOCUMENT CONTAINS LAIRD TECHNOLOGIES CONFIDENTIAL INFORMATION. REPRODUCTION, USE, DISCLOSURE OR TRANSMITTAL OF ALL OR ANY PART OF THIS DOCUMENT IS PROHIBITED EXCEPT TO THE EXTENT APPROVED IN WRITING BY AN AUTHORIZED REPRESENTATIVE OF LAIRD TECHNOLOGIES. LAIRD TECHNOLOGIES RESERVES ALL RIGHTS UNDER PATENTS, TRADEMARKS, COPY RIGHTS AND TRADE SECRETS. COPYRIGHT, LAIRD TECHNOLOGIES 2008, ALL RIGHTS RESERVED.

MATERIAL: SEE TABLE

FINISH: SEE TABLE

APPROVALS		DATE
ME:		
RF:		
EM:		
Prod:		

THIRD ANGLE PROJECTION

INTERPRET DIMENSIONING AND TOLERANCING IN ACCORDANCE WITH ASME Y14.5M-1994

DO NOT SCALE DRAWING

TOLERANCES UNLESS OTHERWISE SPECIFIED

DIMENSIONS ARE IN MILLIMETERS

ANGLE:	±30'
0 PLACE DECIMAL:	±0.5
1 PLACE DECIMAL:	±0.25
2 PLACE DECIMAL:	±0.13

Laird TECHNOLOGIES
1751 WILKENING COURT
SCHAUMBURG, IL 60173
USA

TITLE: Adapter, N-Type Jack to BNC Plug

SIZE	DWG NO.	REV
A3	CNFBN	A

WEIGHT: | PREVIOUS# | SCALE: | SHEET 1 OF 1