REVISIONS			
REV	DESCRIPTION	DATE	APPROVED
01_5	REVISED	9/26/94	M.Y.

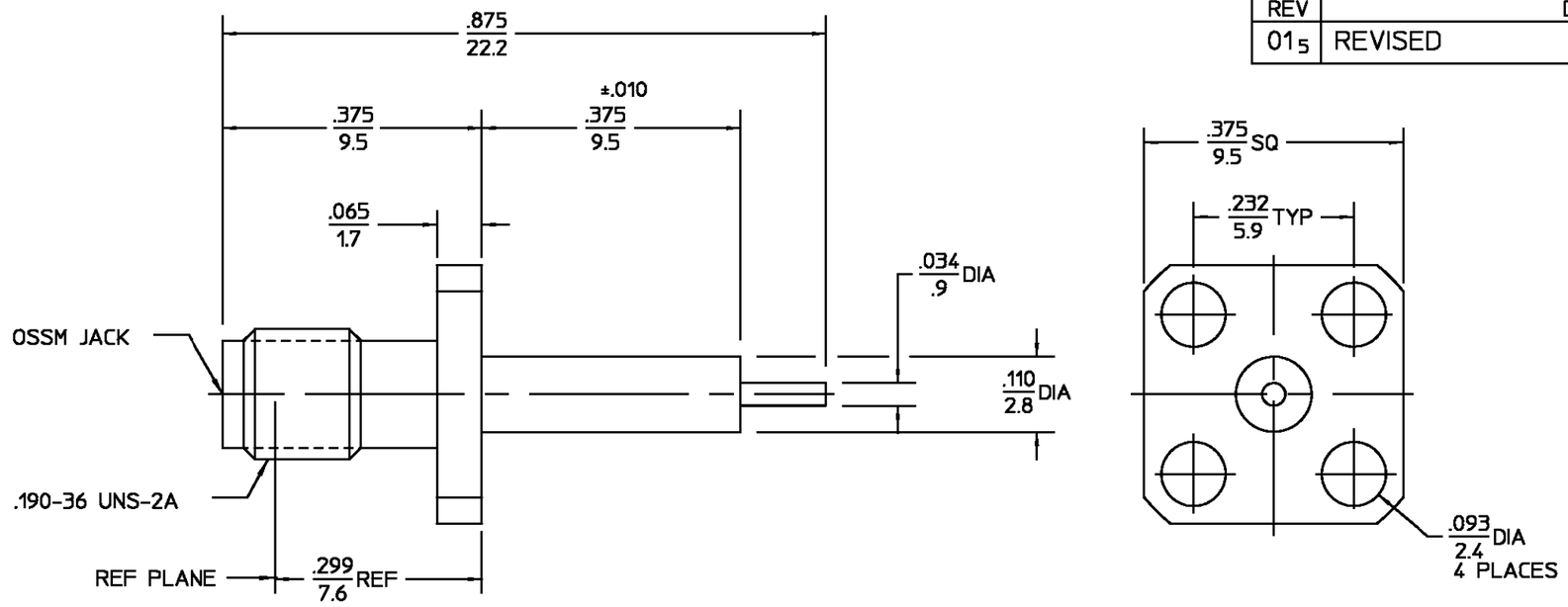

.XXX = in
XX.X = mm

ELECTRICAL	MECHANICAL	ENVIRONMENTAL
Nominal Impedance (Ohms) 50	Interface Dimensions	Temperature Rating
Frequency Range (GHz) DC to 18	MIL-STD-348A, Fig. 319.2	-65°C To +125°C
Voltage Rating (VRMS MIN)	Mating Characteristics:	Vibration MIL-STD-202,
250 @ Sea Level	Insertion (MAX Lbs) 3.0	Method 204, Cond. D
VSWR 1.05 +.006 f(GHz)	Withdrawal (MIN Oz) 1.0	Shock MIL-STD-202,
Insertion Loss(dB MAX) $.04\sqrt{f(GHz)}$	Force to Engage and	Method 213, Cond. I
RF Leakage (dB MIN)	Disengage (In-Lbs MAX) 2.0	Thermal shock MIL-STD-202
-60 @ 2 to 3 GHz	Center Contact Captivation:	Method 107, Cond. B, except
Corona, 70,000 Ft (VRMS MIN) 190	Axial (Lbs) 6.0	High Temp shall be 115°C
Dielectric Withstanding Voltage	Radial (In-Oz) 4.0	Moisture Resistance
(VRMS MIN) @ Sea Level 750		MIL-STD-202, Method 106,
Contact Resistance (Milliohms MAX)		except step 7b (vibration)
Center Contact 2.0		shall be omitted
Outer Contact 2.0		Corrosion MIL-STD-202,
RF High Potential @ Sea Level		Method 101, Cond. B,
(VRMS MIN @ 5 MHz) 500		5% salt spray
I.R. (Megohms Min) 5,000		

COMPONENT	MATERIAL	FINISH
HOUSING	STAINLESS STEEL PER ASTM-A484 AND ASTM-A582, TYPE 303	PASSIVATED PER QQ-P-35
DIELECTRIC	TFE FLUOROCARBON PER ASTM-D-1457	N/A
CENTER CONTACT	BERYLLIUM COPPER PER ASTM B 196, ALLOY C17300, CONDITION H	GOLD PLATE PER MIL-G-45204

UNLESS OTHERWISE SPECIFIED DIMENSIONS ARE IN INCHES TOLERANCE ON
FRAC. ± 1/64 DEC. ±.005 ANGLES ± 1°

DRAWN BY DC DATE 6/2/70
CHECKED BY TAR 6/6/70
APP'D BY SDS 6/8/70

AMP

_ AMP Incorporated
140 Fourth Avenue
Waltham, MA 02451-7599

These drawings and specifications are the property of M/A-COM Interconnect Division and shall not be reproduced or copied or used in whole or in part as the basis for the manufacture or sale of item(s) without written permission.

USE ASS'Y PROCEDURE

NO. A.P. N/A

TITLE OSSM 4-HOLE FLANGE MOUNT JACK RECEPTACLE STRAIGHT TERMINAL

SIZE	CODE IDENT NO.		REV
B	26805	1052-1201-02	01_5
SCALE 5:1			SHEET 1 OF 1

CUSTOMER DRAWING

AMP PART # 1045578-1
SHEET 1 OF 1 REV A