THIS DRAWING IS UNPUBLISHED. RELEASED FOR PUBLICATION -,- .
© COPYRIGHT - BY TYCO ELECTRONICS CORPORATION. ALL RIGHTS RESERVED.

LOC	DIST
AD	00

REVISIONS

P	LTR	DESCRIPTION	DATE	DWN	APVD
	K	EC 0G3C 0068 05	07MAR05	BSV	JRO

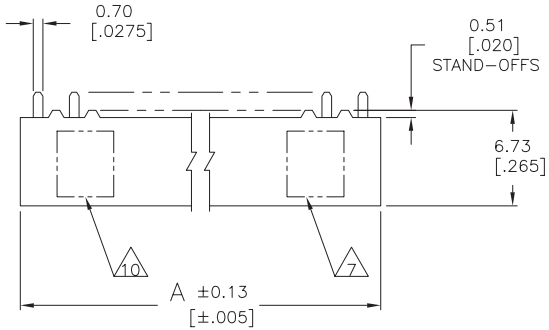

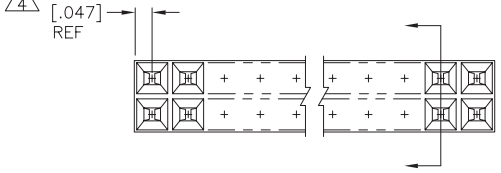

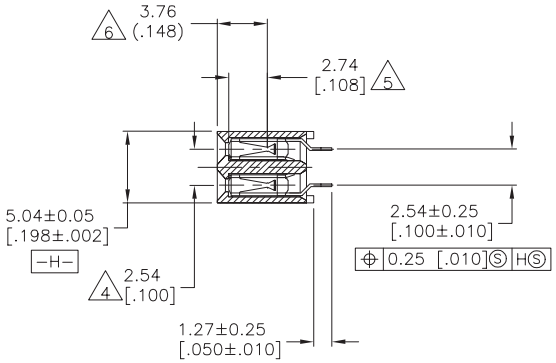

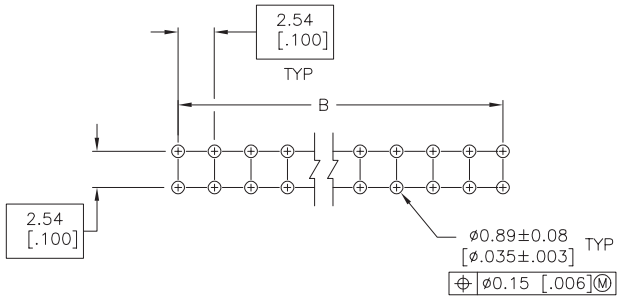

RECOMMENDED PC BOARD LAYOUT

1. FLAME RETARDANT POLYESTER PCT, COLOR – BLACK
2. PHOSPHOR BRONZE
3. DUPLEX PLATED: 0.00076 (.000030) GOLD ON CONTACT AREA ONLY, 0.00381–0.00762 (.000150–.000300) BRIGHT TIN–LEAD ON SOLDER LEADS, ALL OVER 0.00127 (.000050) MINIMUM NICKEL
4. THESE DIMENSIONS PERTAIN TO CAVITY CENTERLINES ONLY – NOT TO CONTACT LOCATIONS
5. POINT OF MEASUREMENT DIMENSIONS FOR PLATING THICKNESS (INSIDE CONTACT BEAMS)
6. POINT–OF–CONTACT DIMENSION
7. TYCO LOGO AND CSA LOGO ARE MOLDED INTO THE HOUSING, THIS LOCATION
8. DUPLEX PLATED: 0.00076 (.000030) GOLD ON CONTACT AREA ONLY, 0.00381–0.00762 (.000150–.000300) MATTE TIN ON SOLDER LEADS, ALL OVER 0.00127 (.000050) MINIMUM NICKEL
9. ROHS 2002/95/EC COMPLIANT
10. PART NUMBER AND DATE CODE MARKED IN APPROXIMATE LOCATION SHOWN

8	20.19 [.795]	.700	16	9 5-535615-1
3	20.19 [.795]	.700	16	535615-1
FINISH	A	B	NO OF POSN	PART NUMBER

535615

THIS DRAWING IS A CONTROLLED DOCUMENT.

DIMENSIONS: mm [INCHES]

TOLERANCES UNLESS OTHERWISE SPECIFIED:
0 PLC ± –
1 PLC ± –
2 PLC ± –
3 PLC ± –
4 PLC ± –
ANGLES ± –

MATERIAL 1 2
FINISH 3 8

DWN J.MARTINELLI 31/7/92
CHK BOB ELICKER 31/7/92
APVD BOB ELICKER 31/7/92
PRODUCT SPEC –
APPLICATION SPEC –
WEIGHT –

tyco Electronics
Tyco Electronics Corporation
Harrisburg, Pa 17105-3608

NAME
RCPT ASSY, MOD IV, DBL-ROW, .100
CLOSED-ENTRY, VERT-MT, SIDE TO SIDE STACKABLE
–

SIZE	CAGE CODE	DRAWING NO	RESTRICTED TO
A2	00779	C-535615	–

CUSTOMER DRAWING | SCALE 4:1 | SHEET 1 OF 1 | REV K

AMP 1471-9 REV 31MAR2000