MAT'L: NYLON 6 (RMS-52) PART NO.	MAT'L: NYLON 6 UL94 V-0 (RMS-103) PART NO.	HOLE DIA. "G"	THICKNESS "F"	"A" ±.012 (±0.3)	"B" ±.008 (±0.2)	"C" ±.012 (±0.3)	"D"	"E" ±.012 (±0.3)	FIG. NO.
SRH-3035	SRHVO-3035	.122-.126 (3.1-3.2)	.039-.079 (1.0-2.0)	.252 (6.4)	.039 (1.0)	.14 (3.5)	.118 (3.0)	.26 (6.5)	1
SRH-3045	SRHVO-3045		.079-.118 (2.0-3.0)			.18 (4.5)			
SRH-3055	SRHVO-3055		.118-.157 (3.0-4.0)			.22 (5.5)			
SRH-3065	SRHVO-3065		.157-.197 (4.0-5.0)	.236 (6.0)		.26 (6.5)		.39 (10.0)	
SRH-3080	SRHVO-3080		.197-.256 (5.0-6.5)			.31 (8.0)			
SRH-3090	SRHVO-3090		.256-.295 (6.5-7.5)	.252 (6.4)		.35 (9.0)		.47 (12.0)	
SRH-3100	SRHVO-3100		.295-.335 (7.5-8.5)			.39 (10.0)			
SRH-3535	SRHVO-3535	.142-.146 (3.6-3.7)	.039-.079 (1.0-2.0)	.252 (6.4)	.039 (1.0)	.14 (3.5)	.138 (3.5)	.26 (6.5)	2
SRH-3545	SRHVO-3545		.079-.118 (2.0-3.0)			.18 (4.5)			
SRH-3555	SRHVO-3555		.118-.157 (3.0-4.0)	.236 (6.0)		.22 (5.5)		.39 (10.0)	
SRH-3560	SRHVO-3560		.138-.177 (3.5-4.5)			.24 (6.0)			
SRH-3570	SRHVO-3570		.177-.217 (4.5-5.5)			.28 (7.0)			
SRH-3580	SRHVO-3580		.217-.256 (5.5-6.5)			.31 (8.0)			

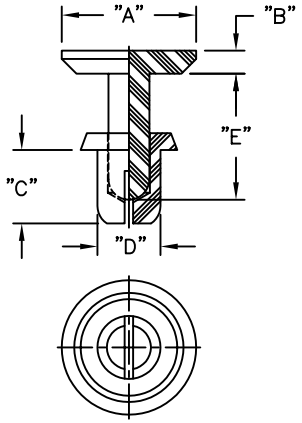

FIG. 1

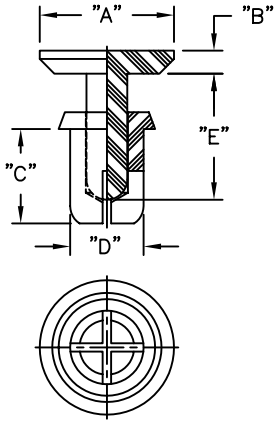

FIG. 2

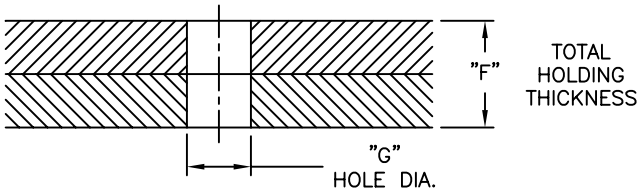

REV	DESCRIPTION	ENGR DATE
E	ADDED SRH-3090, -3100, -3535,-3580, TOLERANCES, COLUMN SRHVO; CHANGED FILE NO. RMS COLUMN REMOVED AND RMS NO. CHANGED	SM 10.31.01
D	DIM "A" COLUMN CHANGED	J.L. 2.6.98
C	CHANGED "A" DIM COLUMN (ECN 131)	PB 05.09.95
B	RMS NO. ADDED TO TABLE	PB 08.30.94
A	COMPLETE RE-DRAW, ADDED SRH-3545 3555, 3560, 3570	PB 08.08.94

TITLE: SNAP RIVET, H-TYPE

DWG IN IN (MM)

TOLERANCES UNLESS NOTED
.XX=±.010
.XXX=±.005
FRAC=±1/64
ANG=±1°

FILE # SRH
MAT'L: SEE NOTES
RE: RICHCO, INC.

DWN: P.B.
DT: 08-08-94
APP:
DT:

RICHCO INC.
PO BOX 804238,CHICAGO,60680
(773) 539-4060

FINAL

PART # SEE TABLE

PRINT TYPE CA