Alle Rechte vorbehalten/ *All rights reserved*

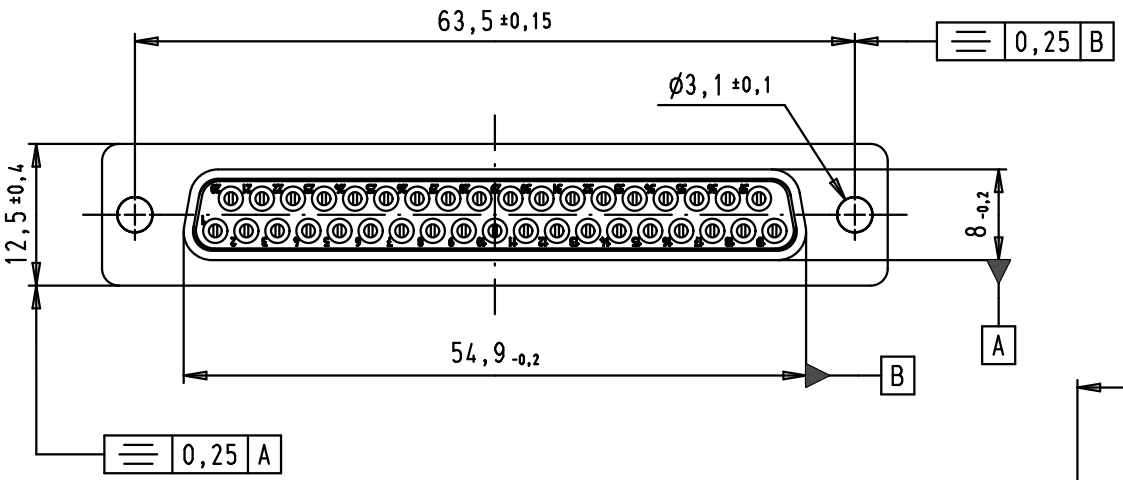

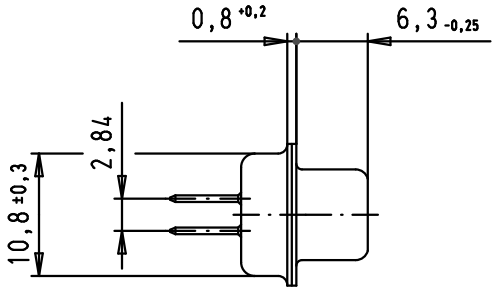

SPECIFICATIONS

Performace level	PL2
Filter type	C
Capacitance	47 pF±20%
Working voltage	100 V
Current rating	7,5 A
Insulation resistance	>1 GΩ

FREQUENCY (MHz)	ATTENUATION (dB)
5	-
10	-
50	-
100	-
500	30
1000	35

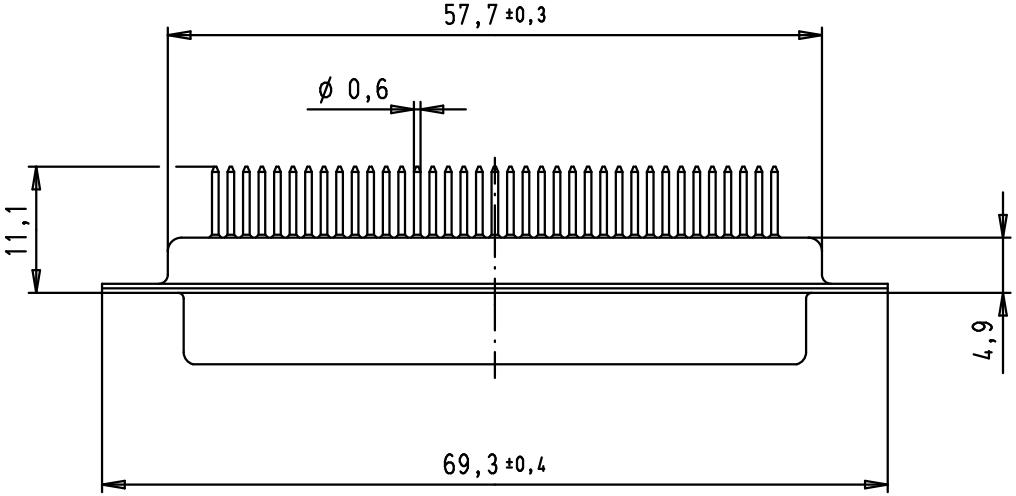

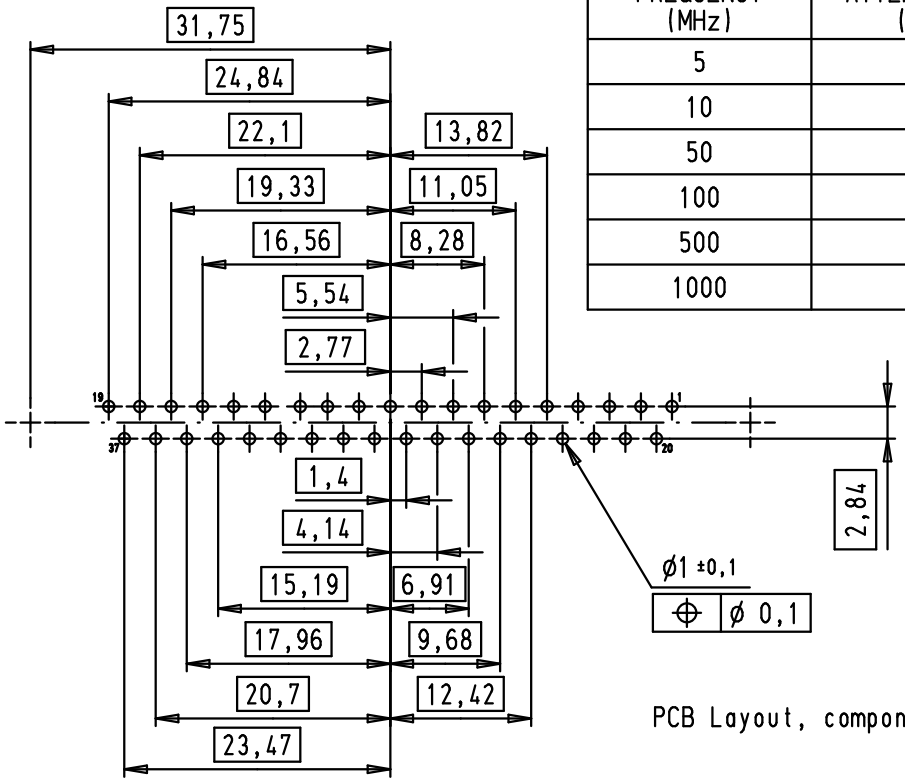

PCB Layout, component side

Mod.	Dat.	Name
36283	09/12/11	SD
35300	01/12/08	PK
33800	16/08/06	PK
31058	08/07/02	CV

	Dat.	Name
Detail.	08/07/02	CV
Insp.	09/12/11	JB
Stand.		

All Dim. in mm
Orig. Size DIN A 4

HARTING EURL
F-95972 Paris

D-Sub, female, straight, 37 poles, turned solder pins

Maßstab/ *Scale* 1,5:1

TB 09 64 412 7210

Sub.

Blatt/ *Page* 1/1