74HC73

Dual JK flip-flop with reset; negative-edge trigger

Rev. 04 — 19 March 2008 Product data sheet

1. General description

The 74HC73 is a high-speed Si-gate CMOS device that complies with JEDEC standard no. 7A. It is pin compatible with Low-power Schottky TTL (LSTTL).

The 74HC73 is a dual negative-edge triggered JK flip-flop featuring individual J, K, clock ($n\overline{CP}$) and reset ($n\overline{R}$) inputs; also complementary nQ and $n\overline{Q}$ outputs.

The J and K inputs must be stable one set-up time prior to the HIGH-to-LOW clock transition for predictable operation.

The reset ($n\overline{R}$) is an asynchronous active LOW input. When LOW, it overrides the clock and data inputs, forcing the nQ output LOW and the $n\overline{Q}$ output HIGH.

Schmitt-trigger action in the clock input makes the circuit highly tolerant to slower clock rise and fall times.

2. Features

- Low-power dissipation
- Complies with JEDEC standard no. 7A
- ESD protection:
  - HBM JESD22-A114E exceeds 2000 V
  - MM JESD22-A115-A exceeds 200 V
- Multiple package options
- Specified from –40 °C to +80 °C and from –40 °C to +125 °C

3. Ordering information

Table 1. Ordering information

Type number	Package			
	Temperature range	Name	Description	Version
74HC73N	–40 °C to +125 °C	DIP14	plastic dual in-line package; 14 leads (300 mil)	SOT27-1
74HC73D	–40 °C to +125 °C	SO14	plastic small outline package; 14 leads; body width 3.9 mm	SOT108-1
74HC73DB	–40 °C to +125 °C	SSOP14	plastic shrink small outline package; 14 leads; body width 5.3 mm	SOT337-1
74HC73PW	–40 °C to +125 °C	TSSOP14	plastic thin shrink small outline package; 14 leads; body width 4.4 mm	SOT402-1

founded by Philips

4. Functional diagram

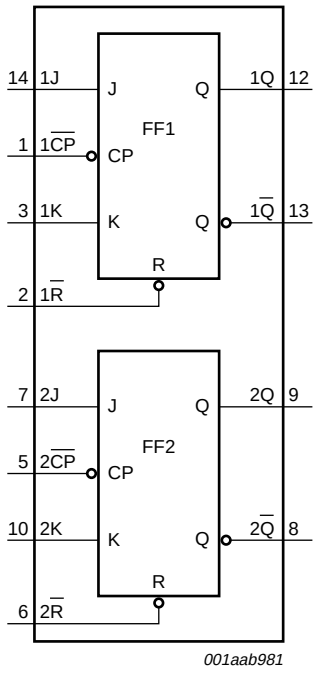

Fig 1. Functional diagram

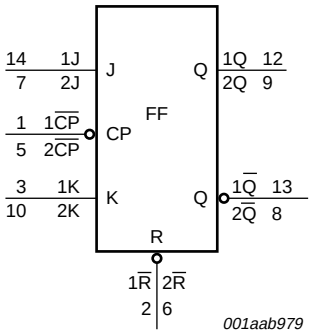

Fig 2. Logic symbol

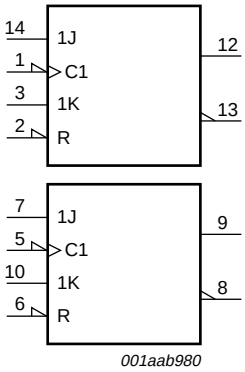

Fig 3. IEC logic symbol

© NXP B.V. 2008. All rights reserved.

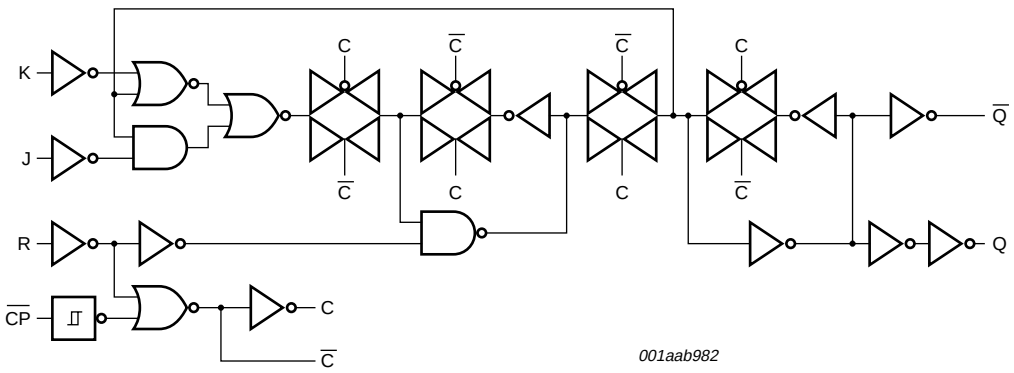

Fig 4. Logic diagram (one flip-flop)

5. Pinning information

5.1 Pinning

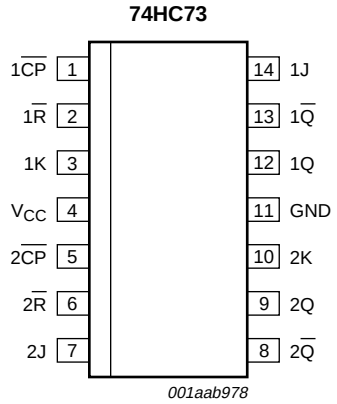

Fig 5. Pin configuration

5.2 Pin description

Table 2. Pin description

Symbol	Pin	Description
$1\overline{CP}$, $2\overline{CP}$	1, 5	clock input (HIGH-to-LOW edge-triggered); also referred to as $n\overline{CP}$
$1\overline{R}$, $2\overline{R}$	2, 6	asynchronous reset input (active LOW); also referred to as $n\overline{R}$
1K, 2K	3, 10	synchronous K input; also referred to as nK
V_{CC}	4	positive supply voltage
GND	11	ground (0 V)
1Q, 2Q	12, 9	true output; also referred to as nQ
$1\overline{Q}$, $2\overline{Q}$	13, 8	complement output; also referred to as $n\overline{Q}$
1J, 2J	14, 7	synchronous J input; also referred to as nJ

© NXP B.V. 2008. All rights reserved.

6. Functional description

Table 3. Function table[1]

Input				Output		Operating mode
$n\overline{R}$	$n\overline{CP}$	nJ	nK	nQ	$n\overline{Q}$	
L	X	X	X	L	H	asynchronous reset
H	↓	h	h	$\overline{q}$	q	toggle
H	↓	l	h	L	H	load 0 (reset)
H	↓	h	l	H	L	load 1 (set)
H	↓	l	l	q	$\overline{q}$	hold (no change)

[1] H = HIGH voltage level;
h = HIGH voltage level one set-up time prior to the HIGH-to-LOW clock transition;
L = LOW voltage level;
l = LOW voltage level one set-up time prior to the HIGH-to-LOW clock transition;
q = state of referenced output one set-up time prior to the HIGH-to-LOW clock transition;
X = don't care;
↓ = HIGH-to-LOW clock transition.

7. Limiting values

Table 4. Limiting values

In accordance with the Absolute Maximum Rating System (IEC 60134). Voltages are referenced to GND (ground = 0 V).

Symbol	Parameter	Conditions		Min	Max	Unit
V_{CC}	supply voltage			–0.5	+7.0	V
I_{IK}	input clamping current	V_I < –0.5 V or V_I > V_{CC} + 0.5 V	[1]	-	±20	mA
I_{OK}	output clamping current	V_O < –0.5 V or V_O > V_{CC} + 0.5 V	[1]	-	±20	mA
I_O	output current	V_O = –0.5 V to V_{CC} + 0.5 V		-	±25	mA
I_{CC}	supply current			-	50	mA
I_{GND}	ground current			–50	-	mA
T_{stg}	storage temperature			–65	+150	°C
P_{tot}	total power dissipation	T_{amb} = –40 °C to +125 °C				
		DIP14 package	[2]	-	750	mW
		SO14 package	[3]	-	500	mW
		(T)SSOP14 package	[4]	-	500	mW

[1] The input and output voltage ratings may be exceeded if the input and output current ratings are observed.

[2] P_{tot} derates linearly with 12 mW/K above 70 °C.

[3] P_{tot} derates linearly with 8 mW/K above 70 °C.

[4] P_{tot} derates linearly with 5.5 mW/K above 60 °C.

© NXP B.V. 2008. All rights reserved.

8. Recommended operating conditions

Table 5. Recommended operating conditions

Symbol	Parameter	Conditions	Min	Typ	Max	Unit
V_{CC}	supply voltage		2.0	5.0	6.0	V
V_I	input voltage		0	-	V_{CC}	V
V_O	output voltage		0	-	V_{CC}	V
T_{amb}	ambient temperature		–40	-	+125	°C
$\Delta t/\Delta V$	input transition rise and fall rate	V_{CC} = 2.0 V	-	-	625	ns
		V_{CC} = 4.5 V	-	1.67	139	ns
		V_{CC} = 6.0 V	-	-	83	ns

9. Static characteristics

Table 6. Static characteristics

At recommended operating conditions; voltages are referenced to GND (ground = 0 V).

Symbol	Parameter	Conditions	25 °C			–40 °C to +85 °C		–40 °C to +125 °C		Unit
			Min	Typ	Max	Min	Max	Min	Max	
V_{IH}	HIGH-level input voltage	V_{CC} = 2.0 V	1.5	1.2	-	1.5	-	1.5	-	V
		V_{CC} = 4.5 V	3.15	2.4	-	3.15	-	3.15	-	V
		V_{CC} = 6.0 V	4.2	3.2	-	4.2	-	4.2	-	V
V_{IL}	LOW-level input voltage	V_{CC} = 2.0 V	-	0.8	0.5	-	0.5	-	0.5	V
		V_{CC} = 4.5 V	-	2.1	1.35	-	1.35	-	1.35	V
		V_{CC} = 6.0 V	-	2.8	1.8	-	1.8	-	1.8	V
V_{OH}	HIGH-level output voltage	$V_I = V_{IH}$ or V_{IL}								
		I_O = –20 μA; V_{CC} = 2.0 V	1.9	2.0	-	1.9	-	1.9	-	V
		I_O = –20 μA; V_{CC} = 4.5 V	4.4	4.5	-	4.4	-	4.4	-	V
		I_O = –20 μA; V_{CC} = 6.0 V	5.9	6.0	-	5.9	-	5.9	-	V
		I_O = –4 mA; V_{CC} = 4.5 V	3.98	4.32	-	3.84	-	3.7	-	V
		I_O = –5.2 mA; V_{CC} = 6.0 V	5.48	5.81	-	5.34	-	5.2	-	V
V_{OL}	LOW-level output voltage	$V_I = V_{IH}$ or V_{IL}								
		I_O = 20 μA; V_{CC} = 2.0 V	-	0	0.1	-	0.1	-	0.1	V
		I_O = 20 μA; V_{CC} = 4.5 V	-	0	0.1	-	0.1	-	0.1	V
		I_O = 20 μA; V_{CC} = 6.0 V	-	0	0.1	-	0.1	-	0.1	V
		I_O = 4 mA; V_{CC} = 4.5 V	-	0.15	0.26	-	0.33	-	0.4	V
		I_O = 5.2 mA; V_{CC} = 6.0 V	-	0.16	0.26	-	0.33	-	0.4	V
I_I	input leakage current	$V_I = V_{CC}$ or GND; V_{CC} = 6.0 V	-	-	±0.1	-	±1.0	-	±1.0	μA
I_{CC}	supply current	$V_I = V_{CC}$ or GND; I_O = 0 A; V_{CC} = 6.0 V	-	-	4.0	-	40.0	-	80.0	μA
C_I	input capacitance		-	3.5	-	-	-	-	-	pF

© NXP B.V. 2008. All rights reserved.

10. Dynamic characteristics

Table 7. Dynamic characteristics

GND (ground = 0 V); C_L = 50 pF unless otherwise specified; for test circuit, see Figure 8

Symbol	Parameter	Conditions		25 °C			−40 °C to +85 °C		−40 °C to +125 °C		Unit
				Min	Typ	Max	Min	Max	Min	Max	
t_{pd}	propagation delay	$n\overline{CP}$ to nQ; see Figure 6	[1]								
		V_{CC} = 2.0 V		-	52	160	-	200	-	240	ns
		V_{CC} = 4.5 V		-	19	32	-	40	-	48	ns
		V_{CC} = 6.0 V		-	15	27	-	34	-	41	ns
		V_{CC} = 5.0 V; C_L = 15 pF		-	16	-	-	-	-	-	ns
		$n\overline{CP}$ to $n\overline{Q}$; see Figure 6									
		V_{CC} = 2.0 V		-	52	160	-	200	-	240	ns
		V_{CC} = 4.5 V		-	19	32	-	40	-	48	ns
		V_{CC} = 6.0 V		-	15	27		34	-	41	ns
		V_{CC} = 5.0 V; C_L = 15 pF		-	16	-	-				ns
		$n\overline{R}$ to nQ, $n\overline{Q}$; see Figure 7									
		V_{CC} = 2.0 V		-	50	145	-	180	-	220	ns
		V_{CC} = 4.5 V		-	18	29	-	36	-	44	ns
		V_{CC} = 6.0 V		-	14	25		31	-	38	ns
		V_{CC} = 5.0 V; C_L = 15 pF		-	15	-	-	-	-	-	ns
t_t	transition time	nQ, $n\overline{Q}$; see Figure 6	[2]								
		V_{CC} = 2.0 V		-	19	75	-	95	-	110	ns
		V_{CC} = 4.5 V		-	7	15	-	19	-	22	ns
		V_{CC} = 6.0 V		-	6	13		16	-	19	ns
t_W	pulse width	$n\overline{CP}$ input, HIGH or LOW; see Figure 6									
		V_{CC} = 2.0 V		80	22	-	100		120	-	ns
		V_{CC} = 4.5 V		16	8	-	20	-	24	-	ns
		V_{CC} = 6.0 V		14	6	-	17	-	20		ns
		$n\overline{R}$ input, HIGH or LOW; see Figure 7									
		V_{CC} = 2.0 V		80	22	-	100		120	-	ns
		V_{CC} = 4.5 V		16	8	-	20	-	24	-	ns
		V_{CC} = 6.0 V		14	6	-	17	-	20		ns
t_{rec}	recovery time	$n\overline{R}$ to $n\overline{CP}$; see Figure 7									
		V_{CC} = 2.0 V		80	22	-	100		120	-	ns
		V_{CC} = 4.5 V		16	8	-	20	-	24	-	ns
		V_{CC} = 6.0 V		14	6	-	17	-	20		ns
t_{su}	set-up time	nJ, nK to $n\overline{CP}$; see Figure 6									
		V_{CC} = 2.0 V		80	22	-	100		120	-	ns
		V_{CC} = 4.5 V		16	8	-	20	-	24	-	ns
		V_{CC} = 6.0 V		14	6	-	17	-	20		ns

© NXP B.V. 2008. All rights reserved.

Table 7. Dynamic characteristics *...continued*

GND (ground = 0 V); C_L = 50 pF unless otherwise specified; for test circuit, see Figure 8

Symbol	Parameter	Conditions		25 °C			–40 °C to +85 °C		–40 °C to +125 °C		Unit
				Min	Typ	Max	Min	Max	Min	Max	
t_h	hold time	nJ, nK to n$\overline{CP}$; see Figure 6									
		V_{CC} = 2.0 V		3	–8	-	3		3	-	ns
		V_{CC} = 4.5 V		3	–3	-	3	-	3	-	ns
		V_{CC} = 6.0 V		3	–2	-	3	-	3		ns
f_{max}	maximum frequency	n$\overline{CP}$ input; see Figure 6									
		V_{CC} = 2.0 V		6.0	23	-	4.8		4.0	-	MHz
		V_{CC} = 4.5 V		30	70	-	24	-	20	-	MHz
		V_{CC} = 6.0 V		35	83	-	28	-	24	-	MHz
		V_{CC} = 5.0 V; C_L = 15 pF		-	77	-		-		-	MHz
C_{PD}	power dissipation capacitance	per flip-flop; V_I = GND to V_{CC}	[3]	-	30	-	-	-	-	-	pF

[1] t_{pd} is the same as t_{PHL}, t_{PLH}.

[2] t_t is the same as t_{THL}, t_{TLH}.

[3] C_{PD} is used to determine the dynamic power dissipation (P_D in µW).
$P_D = C_{PD} \times V_{CC}^2 \times f_i \times N + \Sigma(C_L \times V_{CC}^2 \times f_o)$ where:
f_i = input frequency in MHz;
f_o = output frequency in MHz;
C_L = output load capacitance in pF;
V_{CC} = supply voltage in V;
N = number of inputs switching;
$\Sigma(C_L \times V_{CC}^2 \times f_o)$ = sum of outputs.

© NXP B.V. 2008. All rights reserved.

11. Waveforms

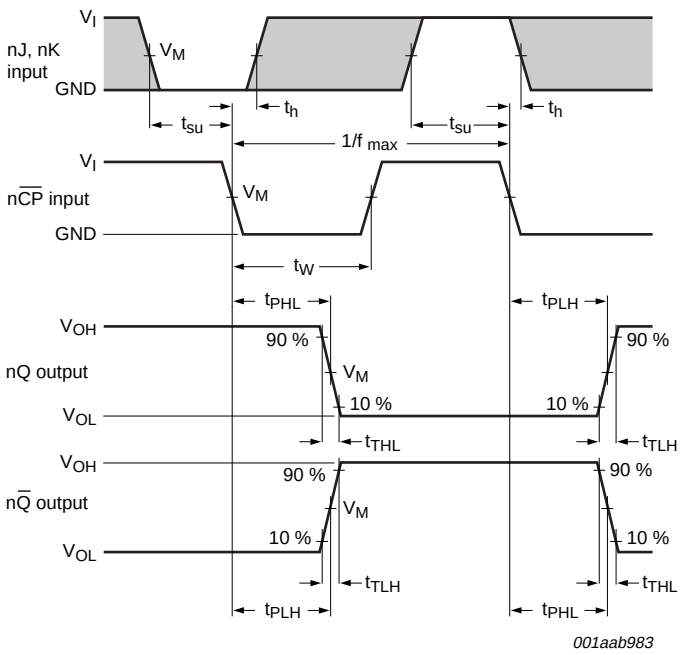

The shaded areas indicate when the input is permitted to change for predictable output performance.

Measurement points are given in Table 8.

V_{OL} and V_{OH} are typical voltage output levels that occur with the output load.

Fig 6. Waveforms showing the clock (nCP) to output (nQ, nQ) propagation delays, the clock pulse width, the J and K to nCP set-up and hold times, the output transition times and the maximum clock frequency

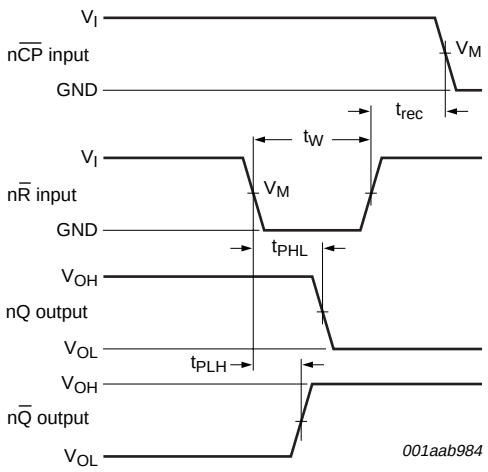

Measurement points are given in Table 8.

V_{OL} and V_{OH} are typical voltage output levels that occur with the output load.

Fig 7. Waveforms showing the reset (nR) input to output (nQ, nQ) propagation delays and the reset pulse width and the nR to nCP removal time

© NXP B.V. 2008. All rights reserved.

Table 8. Measurement points

Type	Input		Output
	V_I	V_M	V_M
74HC73	V_{CC}	$0.5V_{CC}$	$0.5V_{CC}$

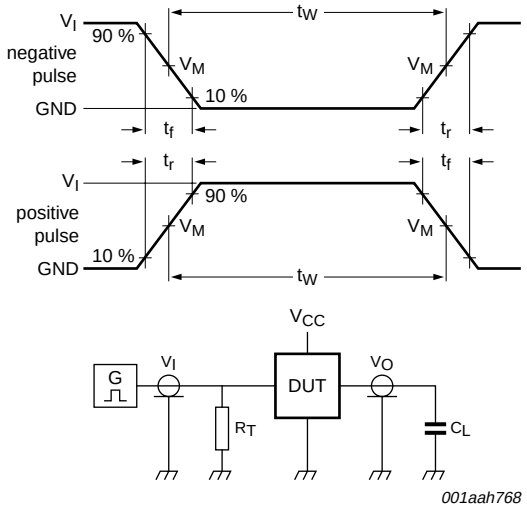

Test data is given in Table 9.

Definitions for test circuit:

R_T = Termination resistance should be equal to output impedance Z_o of the pulse generator.

C_L = Load capacitance including jig and probe capacitance.

Fig 8. Test circuit for measuring switching times

Table 9. Test data

Type	Input		Load
	V_I	t_r, t_f	C_L
74HC73	V_{CC}	6 ns	15 pF, 50 pF

© NXP B.V. 2008. All rights reserved.

12. Package outline

DIP14: plastic dual in-line package; 14 leads (300 mil) **SOT27-1**

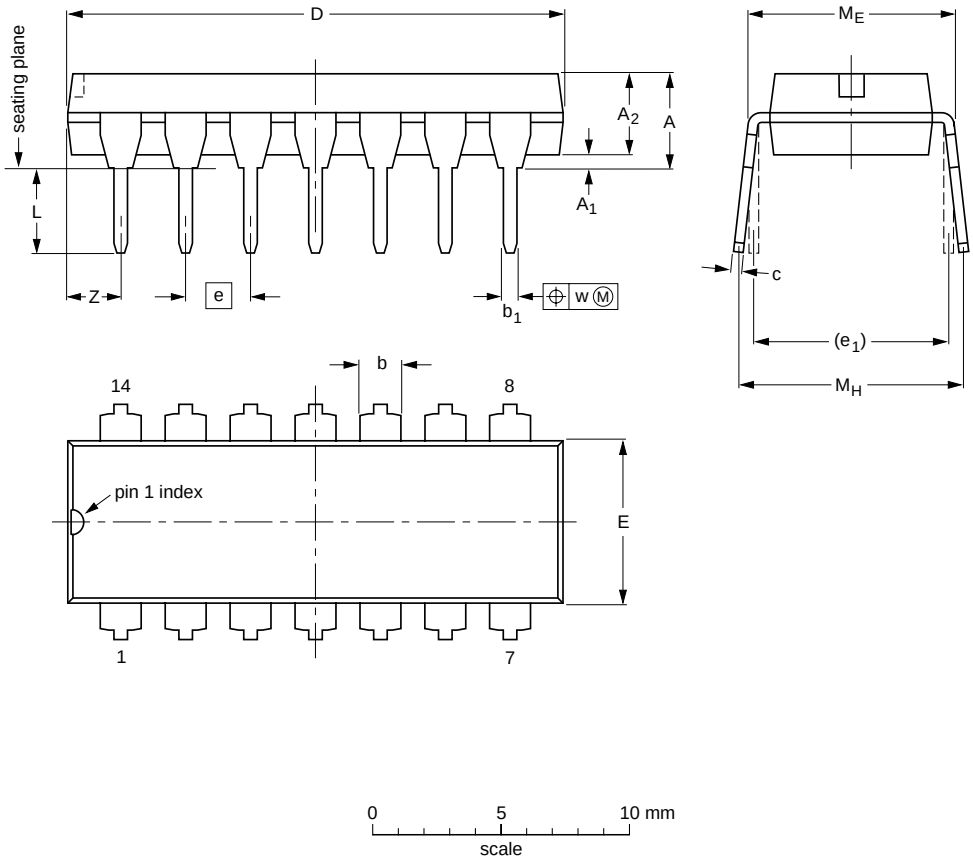

DIMENSIONS (inch dimensions are derived from the original mm dimensions)

UNIT	A max.	A_1 min.	A_2 max.	b	b_1	c	D (1)	E (1)	e	e_1	L	M_E	M_H	w	Z (1) max.
mm	4.2	0.51	3.2	1.73 1.13	0.53 0.38	0.36 0.23	19.50 18.55	6.48 6.20	2.54	7.62	3.60 3.05	8.25 7.80	10.0 8.3	0.254	2.2
inches	0.17	0.02	0.13	0.068 0.044	0.021 0.015	0.014 0.009	0.77 0.73	0.26 0.24	0.1	0.3	0.14 0.12	0.32 0.31	0.39 0.33	0.01	0.087

Note

1. Plastic or metal protrusions of 0.25 mm (0.01 inch) maximum per side are not included.

OUTLINE VERSION	REFERENCES				EUROPEAN PROJECTION	ISSUE DATE
	IEC	JEDEC	JEITA			
SOT27-1	050G04	MO-001	SC-501-14			~~99-12-27~~ 03-02-13

Fig 9. Package outline SOT27-1 (DIP14)

© NXP B.V. 2008. All rights reserved.

SO14: plastic small outline package; 14 leads; body width 3.9 mm **SOT108-1**

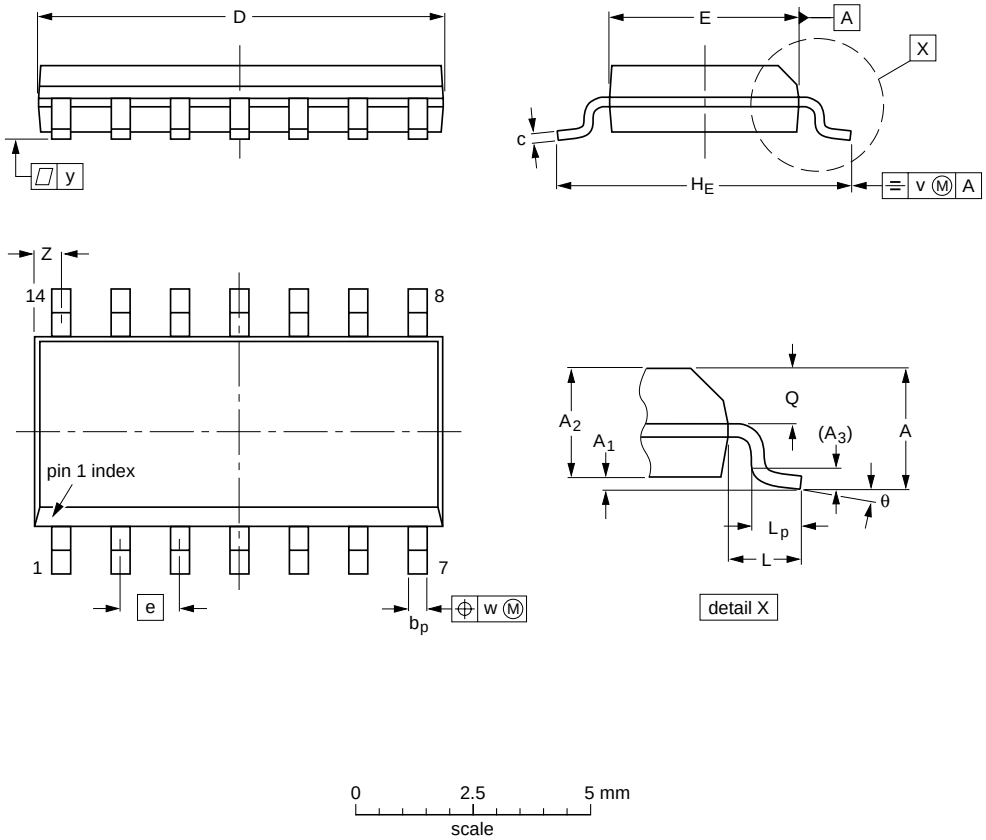

DIMENSIONS (inch dimensions are derived from the original mm dimensions)

UNIT	A max.	A_1	A_2	A_3	b_p	c	D(1)	E(1)	e	H_E	L	L_p	Q	v	w	y	Z(1)	θ
mm	1.75	0.25 0.10	1.45 1.25	0.25	0.49 0.36	0.25 0.19	8.75 8.55	4.0 3.8	1.27	6.2 5.8	1.05	1.0 0.4	0.7 0.6	0.25	0.25	0.1	0.7 0.3	8° 0°
inches	0.069	0.010 0.004	0.057 0.049	0.01	0.019 0.014	0.0100 0.0075	0.35 0.34	0.16 0.15	0.05	0.244 0.228	0.041	0.039 0.016	0.028 0.024	0.01	0.01	0.004	0.028 0.012	

Note

1. Plastic or metal protrusions of 0.15 mm (0.006 inch) maximum per side are not included.

OUTLINE VERSION	REFERENCES				EUROPEAN PROJECTION	ISSUE DATE
	IEC	JEDEC	JEITA			
SOT108-1	076E06	MS-012				~~99-12-27~~ 03-02-19

Fig 10. Package outline SOT108-1 (SO14)

© NXP B.V. 2008. All rights reserved.

SSOP14: plastic shrink small outline package; 14 leads; body width 5.3 mm **SOT337-1**

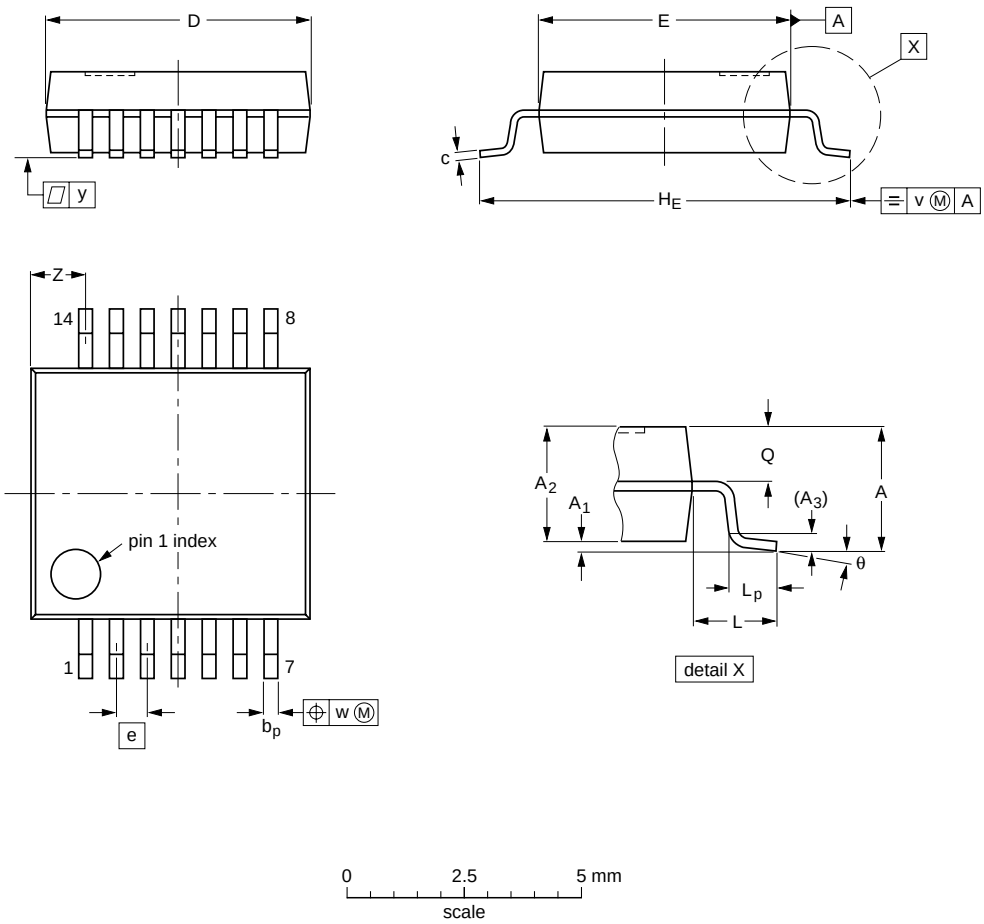

DIMENSIONS (mm are the original dimensions)

UNIT	A max.	A_1	A_2	A_3	b_p	c	D (1)	E (1)	e	H_E	L	L_p	Q	v	w	y	Z (1)	θ
mm	2	0.21 0.05	1.80 1.65	0.25	0.38 0.25	0.20 0.09	6.4 6.0	5.4 5.2	0.65	7.9 7.6	1.25	1.03 0.63	0.9 0.7	0.2	0.13	0.1	1.4 0.9	8° 0°

Note

1. Plastic or metal protrusions of 0.25 mm maximum per side are not included.

OUTLINE VERSION	REFERENCES				EUROPEAN PROJECTION	ISSUE DATE
	IEC	JEDEC	JEITA			
SOT337-1		MO-150				~~99-12-27~~ 03-02-19

Fig 11. Package outline SOT337-1 (SSOP14)

© NXP B.V. 2008. All rights reserved.

TSSOP14: plastic thin shrink small outline package; 14 leads; body width 4.4 mm **SOT402-1**

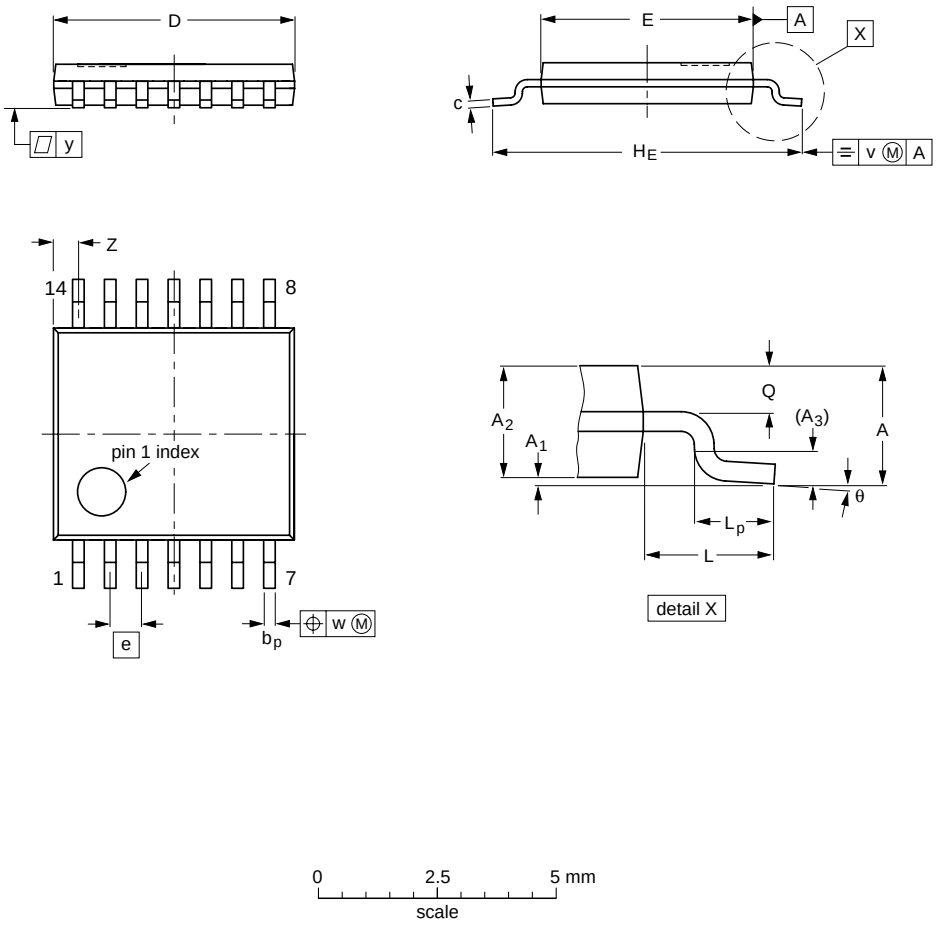

DIMENSIONS (mm are the original dimensions)

UNIT	A max.	A_1	A_2	A_3	b_p	c	D (1)	E (2)	e	H_E	L	L_p	Q	v	w	y	Z (1)	θ
mm	1.1	0.15 0.05	0.95 0.80	0.25	0.30 0.19	0.2 0.1	5.1 4.9	4.5 4.3	0.65	6.6 6.2	1	0.75 0.50	0.4 0.3	0.2	0.13	0.1	0.72 0.38	8° 0°

Notes

1. Plastic or metal protrusions of 0.15 mm maximum per side are not included.
2. Plastic interlead protrusions of 0.25 mm maximum per side are not included.

OUTLINE VERSION	REFERENCES				EUROPEAN PROJECTION	ISSUE DATE
	IEC	JEDEC	JEITA			
SOT402-1		MO-153				~~99-12-27~~ 03-02-18

Fig 12. Package outline SOT402-1 (TSSOP14)

© NXP B.V. 2008. All rights reserved.

13. Abbreviations

Table 10. Abbreviations

Acronym	Description
CMOS	Complementary Metal-Oxide Semiconductor
DUT	Device Under Test
ESD	ElectroStatic Discharge
HBM	Human Body Model
MM	Machine Model
TTL	Transistor-Transistor Logic

14. Revision history

Table 11. Revision history

Document ID	Release date	Data sheet status	Change notice	Supersedes
74HC73_4	20080319	Product data sheet	-	74HC73_3
Modifications:	• The format of this data sheet has been redesigned to comply with the new identity guidelines of NXP Semiconductors. • Legal texts have been adapted to the new company name where appropriate. • Quick reference data incorporated into Section 9 and 10. • Section 8 “Recommended operating conditions” t_r, t_f converted to $\Delta t/\Delta V$.			
74HC73_3	20041112	Product data sheet	-	74HC_HCT73_CNV_2
74HC_HCT73_CNV_2	December 1990	Product specification	-	-

© NXP B.V. 2008. All rights reserved.

15. Legal information

15.1 Data sheet status

Document status[1][2]	Product status[3]	Definition
Objective [short] data sheet	Development	This document contains data from the objective specification for product development.
Preliminary [short] data sheet	Qualification	This document contains data from the preliminary specification.
Product [short] data sheet	Production	This document contains the product specification.

[1] Please consult the most recently issued document before initiating or completing a design.

[2] The term 'short data sheet' is explained in section "Definitions".

[3] The product status of device(s) described in this document may have changed since this document was published and may differ in case of multiple devices. The latest product status information is available on the Internet at URL http://www.nxp.com.

15.2 Definitions

Draft — The document is a draft version only. The content is still under internal review and subject to formal approval, which may result in modifications or additions. NXP Semiconductors does not give any representations or warranties as to the accuracy or completeness of information included herein and shall have no liability for the consequences of use of such information.

Short data sheet — A short data sheet is an extract from a full data sheet with the same product type number(s) and title. A short data sheet is intended for quick reference only and should not be relied upon to contain detailed and full information. For detailed and full information see the relevant full data sheet, which is available on request via the local NXP Semiconductors sales office. In case of any inconsistency or conflict with the short data sheet, the full data sheet shall prevail.

15.3 Disclaimers

General — Information in this document is believed to be accurate and reliable. However, NXP Semiconductors does not give any representations or warranties, expressed or implied, as to the accuracy or completeness of such information and shall have no liability for the consequences of use of such information.

Right to make changes — NXP Semiconductors reserves the right to make changes to information published in this document, including without limitation specifications and product descriptions, at any time and without notice. This document supersedes and replaces all information supplied prior to the publication hereof.

Suitability for use — NXP Semiconductors products are not designed, authorized or warranted to be suitable for use in medical, military, aircraft, space or life support equipment, nor in applications where failure or malfunction of an NXP Semiconductors product can reasonably be expected to result in personal injury, death or severe property or environmental damage. NXP Semiconductors accepts no liability for inclusion and/or use of NXP Semiconductors products in such equipment or applications and therefore such inclusion and/or use is at the customer's own risk.

Applications — Applications that are described herein for any of these products are for illustrative purposes only. NXP Semiconductors makes no representation or warranty that such applications will be suitable for the specified use without further testing or modification.

Limiting values — Stress above one or more limiting values (as defined in the Absolute Maximum Ratings System of IEC 60134) may cause permanent damage to the device. Limiting values are stress ratings only and operation of the device at these or any other conditions above those given in the Characteristics sections of this document is not implied. Exposure to limiting values for extended periods may affect device reliability.

Terms and conditions of sale — NXP Semiconductors products are sold subject to the general terms and conditions of commercial sale, as published at http://www.nxp.com/profile/terms, including those pertaining to warranty, intellectual property rights infringement and limitation of liability, unless explicitly otherwise agreed to in writing by NXP Semiconductors. In case of any inconsistency or conflict between information in this document and such terms and conditions, the latter will prevail.

No offer to sell or license — Nothing in this document may be interpreted or construed as an offer to sell products that is open for acceptance or the grant, conveyance or implication of any license under any copyrights, patents or other industrial or intellectual property rights.

15.4 Trademarks

Notice: All referenced brands, product names, service names and trademarks are the property of their respective owners.

16. Contact information

For more information, please visit: **http://www.nxp.com**

For sales office addresses, please send an email to: **salesaddresses@nxp.com**

© NXP B.V. 2008. All rights reserved.

17. Contents

1 General description 1
2 Features 1
3 Ordering information 1
4 Functional diagram 2
5 Pinning information 3
5.1 Pinning 3
5.2 Pin description 3
6 Functional description 4
7 Limiting values 4
8 Recommended operating conditions 5
9 Static characteristics 5
10 Dynamic characteristics 6
11 Waveforms 8
12 Package outline 10
13 Abbreviations 14
14 Revision history 14
15 Legal information 15
15.1 Data sheet status 15
15.2 Definitions 15
15.3 Disclaimers 15
15.4 Trademarks 15
16 Contact information 15
17 Contents 16

Please be aware that important notices concerning this document and the product(s) described herein, have been included in section 'Legal information'.

founded by PHILIPS

© NXP B.V. 2008. All rights reserved.

For more information, please visit: http://www.nxp.com
For sales office addresses, please send an email to: salesaddresses@nxp.com

Date of release: 19 March 2008
Document identifier: 74HC73_4