THIS DRAWING IS UNPUBLISHED. RELEASED FOR PUBLICATION -.- .
© COPYRIGHT - BY TYCO ELECTRONICS CORPORATION. ALL RIGHTS RESERVED.

LOC	DIST
CM	00

REVISIONS

P	LTR	DESCRIPTION	DATE	DWN	APVD
	H1	ECO-06-013032	12JUN06	BSV	DB
	H2	REVISED PER ECO-09-023313	13OCT09	KK	AEG

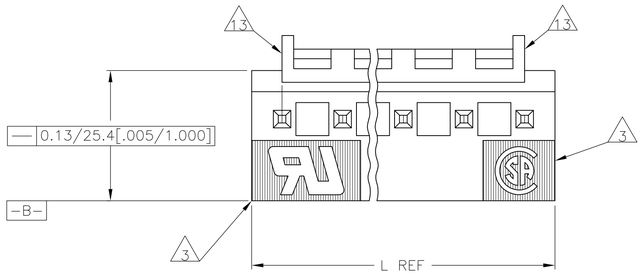

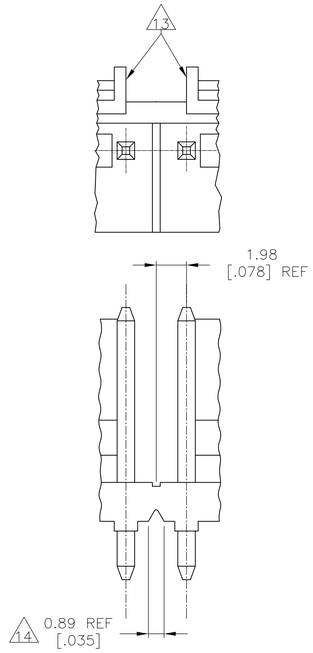

INTERRUPTED WALL FOR POSITION SIZES 6 AND ABOVE 12

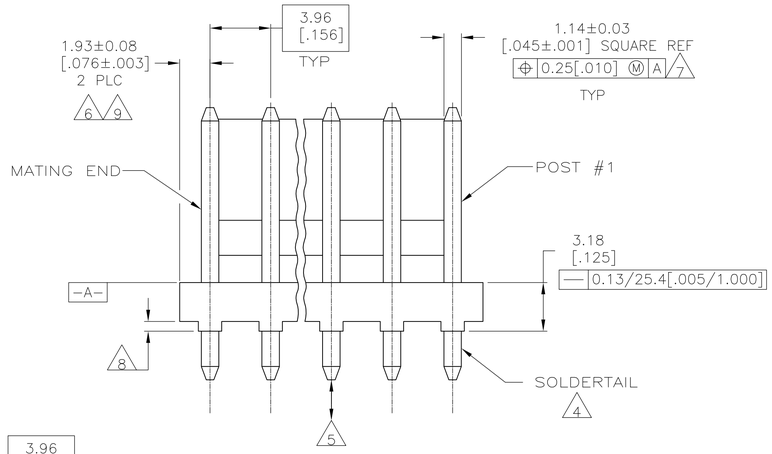

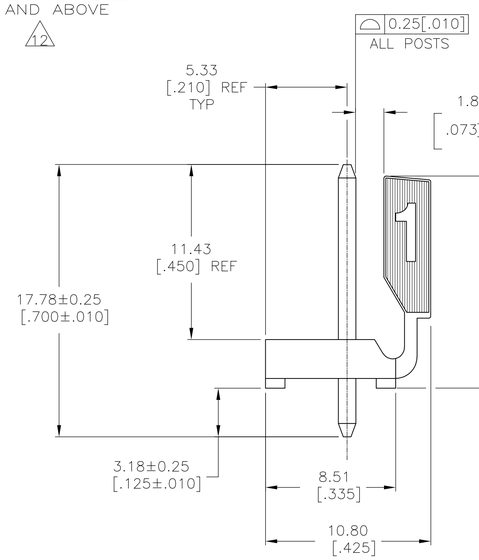

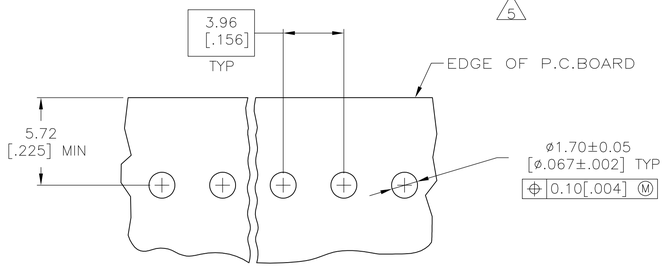

RECOMMENDED MOUNTING HOLE PATTERN FOR 1.57[.062] THICK P.C. BOARD 10

1. MATERIAL
HOUSING: THERMOPLASTIC POLYESTER,GLASS FILLED,UL94V-O.
POST: COPPER ALLOY

2. FINISH
HOUSING: NATURAL
POST: BRIGHT TIN-LEAD (93/7) PLATE, 0.00380-0.00880[.000150-.000350] THK OVER NICKEL UNDERPLATE, 0.00130[.000050] MIN THK.

3. UL MARKING MAY NOT APPEAR ON THE 2 OR 3 POSITION SIZES. CSA MARKING MAY NOT APPEAR ON THE 2 POSITION SIZE.

4. POST SOLDERTAILS COMPLY WITH AMP SOLDERABILITY SPEC 109-11-2.

5. POST WITHSTANDS 13.34N [3 LB] MIN AXIAL FORCE IN EITHER DIRECTION WITHOUT DISLODGING.

6. APPLIES AT -A- .

7. APPLIES WHEN THE HEADER IS STRAIGHT.

8. PLASTIC PROJECTIONS PERMITTED IN THIS ZONE.

9. COORDINATE DIMENSIONS APPLIES FROM THE CENTER OF THE ACTUAL FEATURE.

10. SOLDER SIDE OF BOARD IS SHOWN.

11. DIMENSIONS IN BRACKETS ARE IN INCHES.

12. ALL POSITION SIZES HAVE THE BACKWALL NOTCHED ON BOTH ENDS AS SHOWN. THE 2 THRU 5 POSITION SIZES HAVE SOLID BACKWALLS. POSITION SIZES 6 AND ABOVE HAVE AN INTERRUPTED BACKWALL AT VARIOUS LOCATIONS (SEE TABLE FOR INTERRUPTION(S) LOCATIONS).

13. EDGE OF POLARIZING LOCK WALL TO BE IN LINE WITH CENTERLINE OF ADJACENT POST WITHIN ±0.13 [.005]

14. NOTCH SHOWN MAY OR MAY NOT APPEAR.

15. FINISH
HOUSING: NATURAL
POST: MATTE TIN PLATE 0.000150 MIN THICK OVER NICKEL .

16. OBSOLETE PARTS: OBSOLETE CIS STREAMLINING PER D.RENAUD/D.SINISI

FINISH	BACKWALL INTERRUPTION(S) BETWEEN POST	L	NO. OF POSITIONS	PART NO.
15	4&5, 7&8, 11&12, 14&15	71.20 [2.803]	18	4-644611-8
15	4&5, 7&8, 10&11, 13&14	67.23 [2.647]	17	4-644611-7
15	4&5, 8&9, 12&13	63.27 [2.491]	16	4-644611-6
15	4&5, 8&9, 11&12	59.31 [2.335]	15	4-644611-5
15	4&5 7&8, 10&11	55.35 [2.179]	14	4-644611-4
15	4&5 7&8, 10&11	51.38 [2.023]	13	4-644611-3
15	4&5, 8&9	47.42 [1.867]	12	4-644611-2
15	4&5, 7&8	43.46 [1.711]	11	4-644611-1
15	3&4, 7&8	39.50 [1.555]	10	4-644611-0
15	3&4, 6&7	35.53 [1.399]	9	3-644611-9
15	4&5	31.57 [1.243]	8	3-644611-8
15	4&5	27.61 [1.087]	7	3-644611-7
15	3&4	23.65 [.931]	6	3-644611-6
15	NONE	19.69 [.775]	5	3-644611-5
15	NONE	15.72 [.619]	4	3-644611-4
15	NONE	11.76 [.463]	3	3-644611-3
15	NONE	7.80 [.307]	2	3-644611-2
16 SUPERSEDED	4&5, 7&8, 11&12, 14&15	71.20 [2.803]	18	~~1-644611-8~~
16 SUPERSEDED	4&5, 7&8, 10&11, 13&14	67.23 [2.647]	17	~~1-644611-7~~
16 SUPERSEDED	4&5, 8&9, 12&13	63.27 [2.491]	16	~~1-644611-6~~
16 SUPERSEDED	4&5, 8&9, 11&12	59.31 [2.335]	15	~~1-644611-5~~
16 SUPERSEDED	4&5 7&8, 10&11	55.35 [2.179]	14	~~1-644611-4~~
16 SUPERSEDED	4&5 7&8, 10&11	51.38 [2.023]	13	~~1-644611-3~~
16 SUPERSEDED	4&5, 8&9	47.42 [1.867]	12	1-644611-2
16 SUPERSEDED	4&5, 7&8	43.46 [1.711]	11	~~1-644611-1~~
16 SUPERSEDED	3&4, 7&8	39.50 [1.555]	10	1-644611-0
16 SUPERSEDED	3&4, 6&7	35.53 [1.399]	9	~~644611-9~~
16 SUPERSEDED	4&5	31.57 [1.243]	8	644611-8
16 SUPERSEDED	4&5	27.61 [1.087]	7	~~644611-7~~
16 SUPERSEDED	3&4	23.65 [.931]	6	644611-6
16 SUPERSEDED	NONE	19.69 [.775]	5	644611-5
16 SUPERSEDED	NONE	15.72 [.619]	4	644611-4
16 SUPERSEDED	NONE	11.76 [.463]	3	644611-3
16 SUPERSEDED	NONE	7.80 [.307]	2	644611-2

THIS DRAWING IS A CONTROLLED DOCUMENT.

DIMENSIONS: mm [INCHES]

TOLERANCES UNLESS OTHERWISE SPECIFIED:
0 PLC ± -
1 PLC ± -
2 PLC ± 0.13[.005]
3 PLC ± -
4 PLC ± -
ANGLES ± -

MATERIAL 1
FINISH 2

METRIC

DWN L.SMITH 03DEC93
CHK R.SWING 03DEC93
APVD D.CLARK 15DEC93
PRODUCT SPEC —
APPLICATION SPEC —
WEIGHT —

Tyco Electronics
Tyco Electronics Corporation
Harrisburg, Pa 17105-3608

NAME MTA-156 HEADER ASSEMBLY, POLARIZED LOCK, STRAIGHT, .045 SQUARE POST,TIN-LEAD PLATED,WITHOUT RETENTION PEGS

SIZE	CAGE CODE	DRAWING NO	RESTRICTED TO
A1	00779	C-644611	—

CUSTOMER DRAWING SCALE 5:1 SHEET 1 OF 1 REV H2